Deze download wordt u gratis aangeboden door Pick-upnaalden.nl

Web	:	www.pickupnaalden.com
Email	:	info@pick-upnaalden.nl
Facebook	:	www.facebook.com/pickupnaalden
Twitter	:	twitter.com/Pickupnaalden
Google+	:	https://plus.google.com/+FCaris_pickupnaalden

ORDER NO. SD8010-1794

Service Manual

Direct Drive Automatic Turntable System

Revise

SL-7

[E], [EK], [XL],
[EB], [EG], [EF], [XA]

SL-7(K)

[E], [EK], [XL],
[EB], [EG], [XA]

*** The colors of this model include silver and Black. The black type model is provided with (K) in the Service Manual.**

Areas

* [E] is available in Scandinavia.
* [EK] is available in United Kingdom.
* [XL] is available in Australia.
* [EB] is available in Belgium.
* [EG] is available in European.
* [EF] is available in France.
* [XA] is available in Asia, Latin America, Middle East and Africa.

NOTES:

1. This revised service manual includes the points of change from SL-7/K service manual (Order No. SD8009-1781), and the related printed circuit board diagram and adjusting method.
2. For the servicing of Model SL-7, use this revised service manual.
3. SL-7/K service manual (Order No. SD8009-1781) must be disused.

SPECIFICATIONS

Specifications subject to change without notice.
Weight and dimensions shown are approximate.

■ General

Power supply:	~110-120/220-240V, 50/60 Hz DC 12V (DC input jack)
Power consumption:	20 W (AC) 6W (DC)
Dimensions: **(W x H x D)**	31.5 x 8.8 x 31.5 cm (12-1/2" x 3-1/2" x 12-1/2")
Weight:	7 kg (15.4 lbs.)

■ Turntable section

Type:	Quartz direct drive Automatic turntable Auto start/Auto lead-in Auto return Auto stop Repeat play Auto speed select Auto size select 2-speed search functions Record presence detection
Drive method:	Direct drive
Motor:	Brushless DC motor
Drive control method:	Quartz-phase-locked control
Turntable platter:	Aluminum die-cast Diameter 30 cm (12 inches)
Turntable speeds:	33-1/3 rpm and 45 rpm Auto speed select (Manual selection possible)
Speed deviation:	within ± 0.002%
Wow and flutter:	0.012% WRMS* 0.025% WRMS (JIS C5521) ± 0.035% peak (IEC 98A Weighted)

* Measured by obtaining signal from built-in frequency generator of motor assembly.

Rumble:	−56 dB (IEC 98A Unweighted) −78 dB (IEC 98A Weighted)

■ Tonearm section

Type:	Dynamic balanced type Linear tracking tonearm 4-pivot gimbal suspension
Effective length:	10.5 cm (4-1/8")
Tracking error angle:	Within ± 0.1°
Effective mass:	9 g (including cartridge)
Resonance frequency:	12 Hz
Tonearm drive motor:	Coreless DC motor

Technics

Matsushita Electric Trading Co., Ltd.
P.O. Box 288, Central Osaka Japan

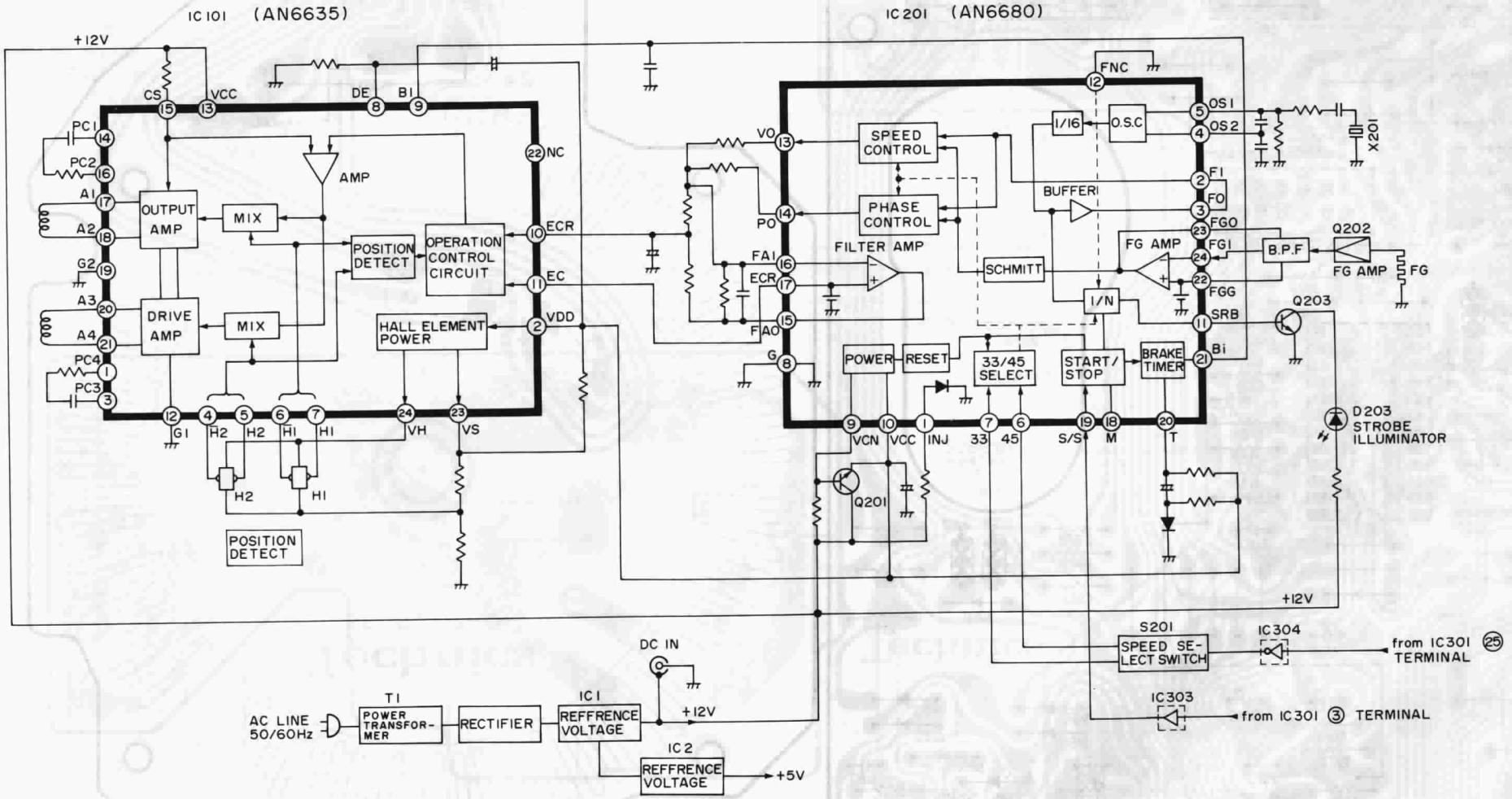
IC 101 (AN6635)
IC 201 (AN6680)
+12V
CS
VCC
DE
BI
PC1
PC2
A1
A2
G2
A3
A4
PC4
PC3
OUTPUT AMP
DRIVE AMP
MIX
MIX
AMP
POSITION DETECT
OPERATION CONTROL CIRCUIT
HALL ELEMENT POWER
NC
ECR
EC
VDD
G1
H2
H2
HI
HI
VH
VS
H2
HI
POSITION DETECT
FNC
OSC
1/16
OS1
OS2
X201
SPEED CONTROL
PHASE CONTROL
VO
PO
FAI
ECR
FAO
G
FILTER AMP
BUFFER
FI
FO
FGO
FGI
FGG
SRB
Bi
B.P.F
Q202
FG AMP
FG
SCHMITT
FG AMP
1/N
Q203
POWER
RESET
33/45 SELECT
START/ STOP
BRAKE TIMER
D203 STROBE ILLUMINATOR
VCN
VCC
INJ
33
45
S/S
M
T
Q201
+12V
S201
SPEED SELECT SWITCH
IC304
from IC301 (25) TERMINAL
IC303
from IC301 (3) TERMINAL
DC IN
T1
POWER TRANSFORMER
AC LINE 50/60Hz
RECTIFIER
IC1
REFFRENCE VOLTAGE
+12V
IC2
REFFRENCE VOLTAGE
+5V

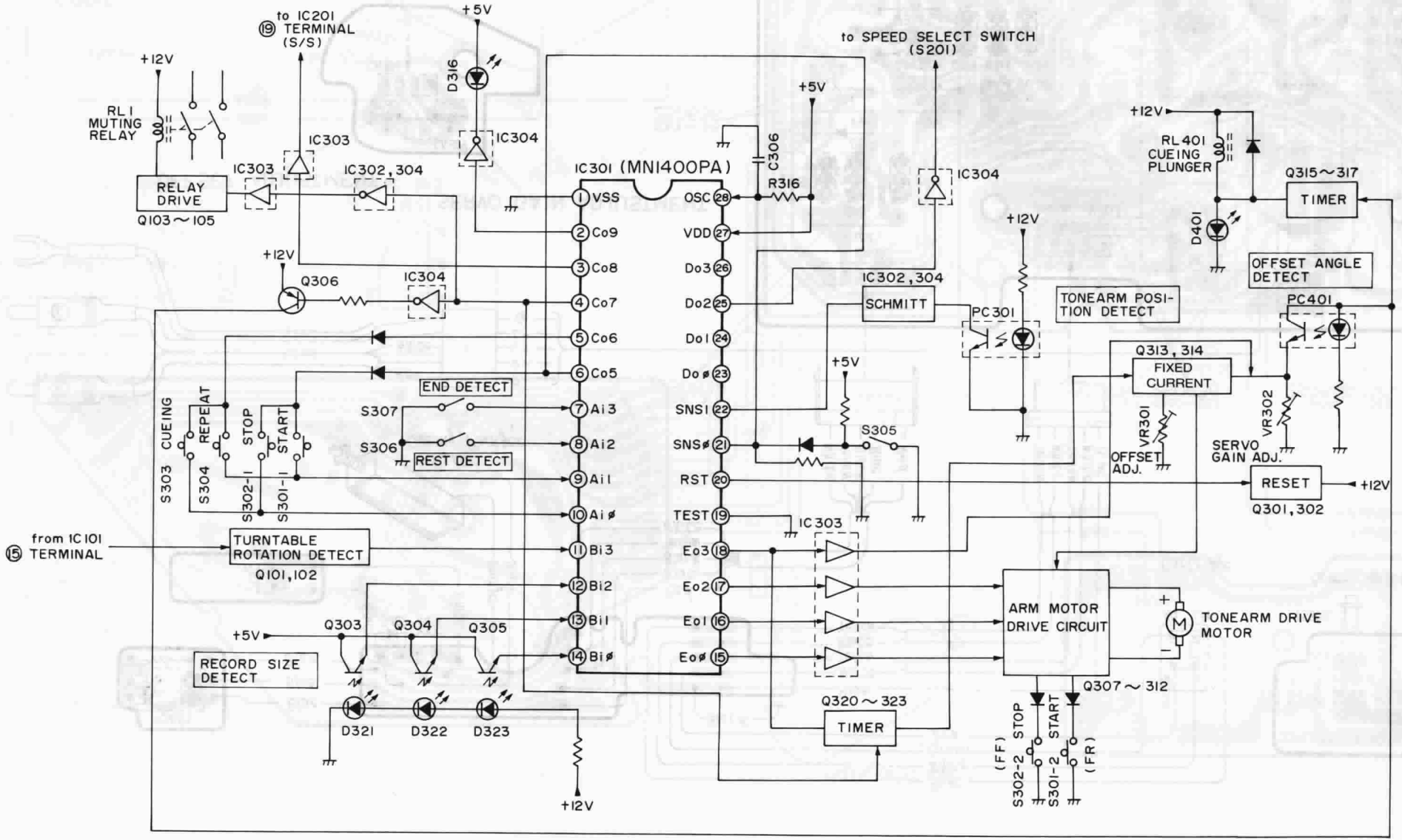
to IC201 ⑲ TERMINAL (S/S)
+12V
RL1 MUTING RELAY
RELAY DRIVE
Q103～105
IC303
IC303
IC302,304
+5V
D316
IC304
IC301 (MN1400PA)
C306
R316
VSS
Co9
Co8
Co7
Co6
Co5
Ai3
Ai2
Ai1
Ai ø
Bi3
Bi2
Bi1
Bi ø
OSC
VDD
Do3
Do2
Do1
Do ø
SNS1
SNS ø
RST
TEST
Eo3
Eo2
Eo1
Eo ø
to SPEED SELECT SWITCH (S201)
IC304
+5V
+12V
Q306
IC304
IC302,304
SCHMITT
PC301
+12V
RL401 CUEING PLUNGER
Q315～317
TIMER
D401
OFFSET ANGLE DETECT
TONEARM POSITION DETECT
PC401
Q313, 314
FIXED CURRENT
VR301
OFFSET ADJ.
VR302
SERVO GAIN ADJ.
RESET
Q301, 302
+12V
S303 CUEING
REPEAT
S304
STOP
S302-1
START
S301-1
END DETECT
S307
S306
REST DETECT
+5V
S305
from IC101 ⑮ TERMINAL
TURNTABLE ROTATION DETECT
Q101, 102
IC303
ARM MOTOR DRIVE CIRCUIT
TONEARM DRIVE MOTOR
+5V
RECORD SIZE DETECT
Q303
Q304
Q305
D321
D322
D323
+12V
Q320～323
TIMER
Q307～312
(FF)
S302-2 STOP
S301-2 START
(FR)

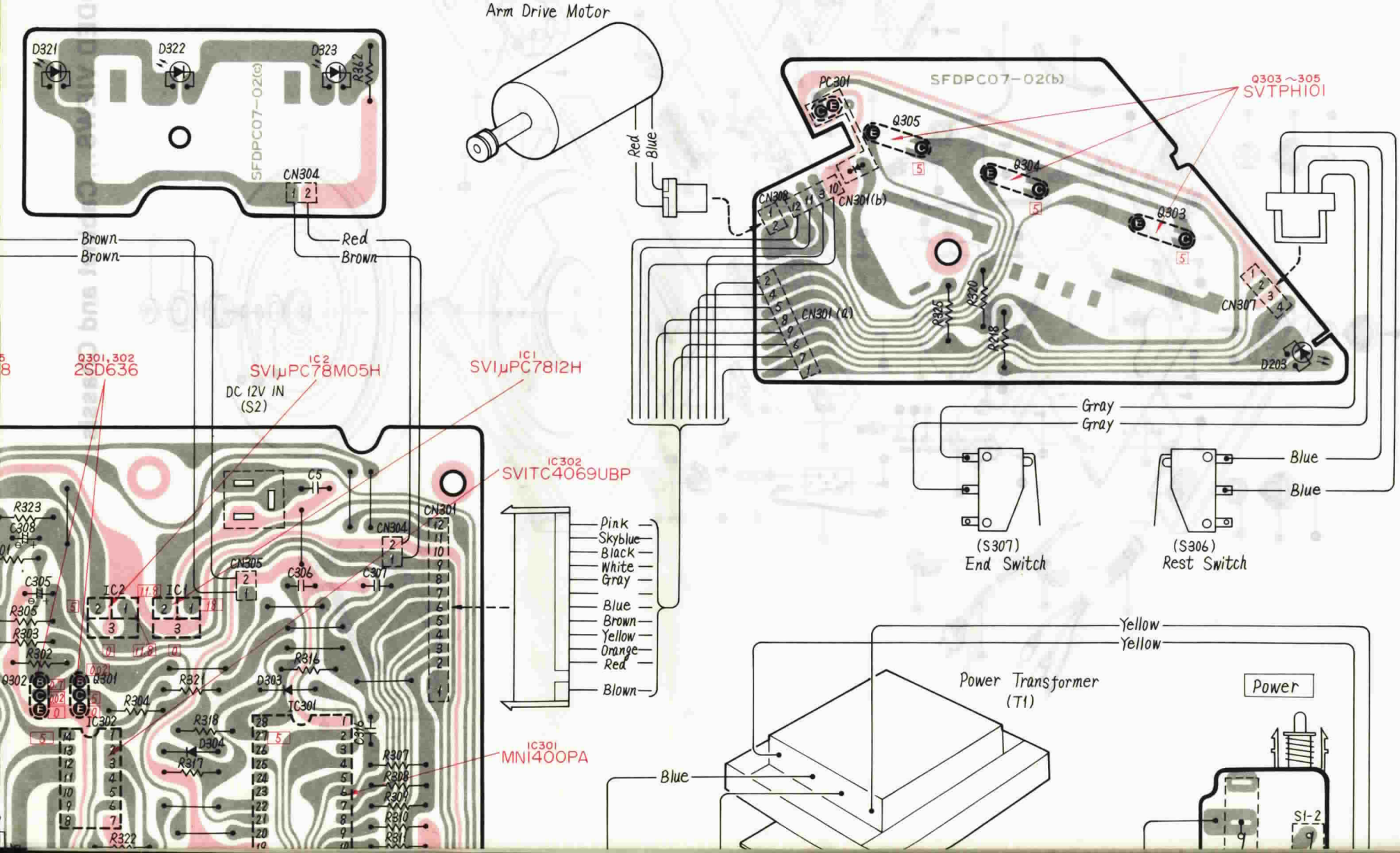

Arm Drive Motor
Red
Blue
D321
D322
D323
R362
SFDPC07-02(c)
CN304
Brown
Brown
Red
Brown
SFDPC07-02(b)
PC301
Q305
Q304
Q303
Q303 ~305
SVTPH101
CN308
CN301(b)
CN301(a)
R325
R320
R218
CN307
D203
Gray
Gray
Blue
Blue
(S307)
End Switch
(S306)
Rest Switch
Q301,302
2SD636
IC2
SV1μPC78M05H
DC 12V IN
(S2)
IC1
SV1μPC7812H
IC302
SVITC4069UBP
C5
CN301
CN304
CN305
C306
C307
R323
C308
C305
R305
R303
R302
Q302
Q301
IC2
IC1
R321
R304
R316
D303
IC301
IC302
R318
D304
R317
C316
R307
R308
R309
R310
R311
R322
IC301
MN1400PA
Pink
Skyblue
Black
White
Gray
Blue
Brown
Yellow
Orange
Red
Blown
Yellow
Yellow
Power Transformer
(T1)
Power
Blue
S1-2

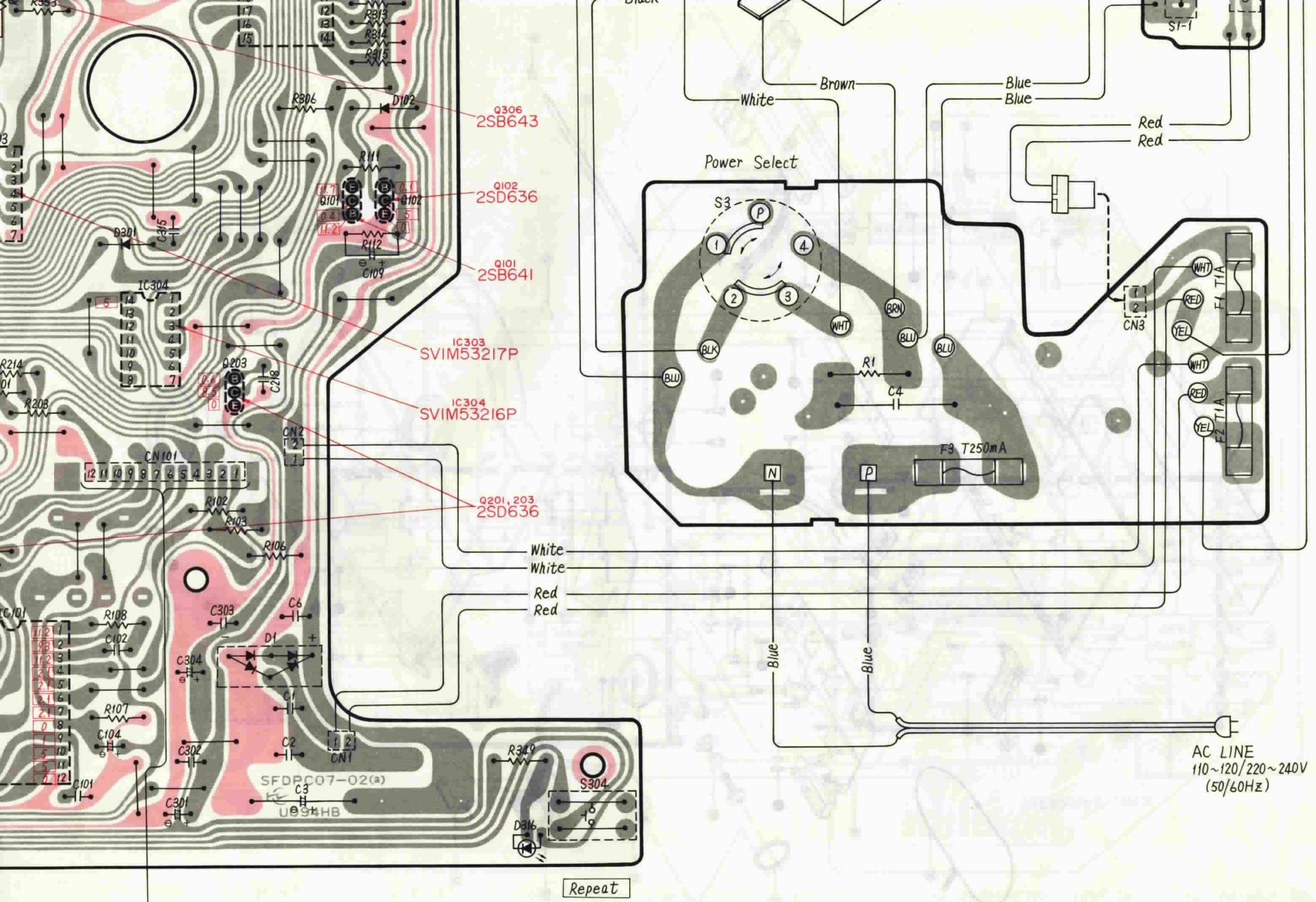

Q306
2SB643
Q102
2SD636
Q101
2SB641
IC303
SVIM53217P
IC304
SVIM53216P
Q201, 203
2SD636
Power Select
S3
White
Brown
Blue
Blue
Red
Red
White
White
Red
Red
Blue
Blue
F3 T250mA
F1 T1A
F2 T1A
CN3
CN101
CN2
CN1
S304
D316
SFDPC07-02(a)
U894HB
Repeat
AC LINE
110~120/220~240V
(50/60Hz)

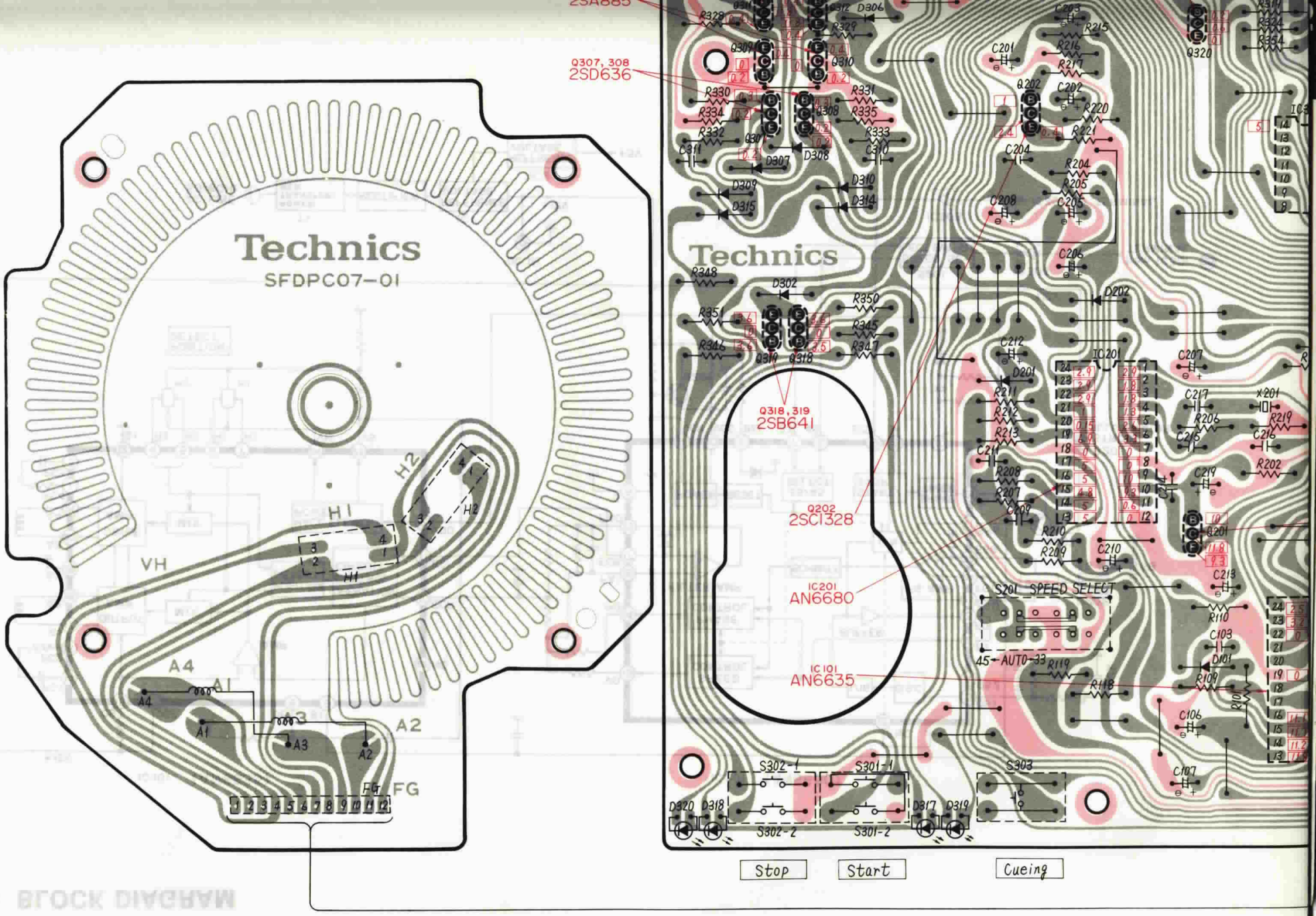
Technics
SFDPC07-01
Technics
Q307, 308
2SD636
Q318, 319
2SB641
Q202
2SC1328
IC201
AN6680
IC101
AN6635
S201 SPEED SELECT
45-AUTO-33
S302-1
S302-2
S301-1
S301-2
S303
Stop
Start
Cueing
H1
H2
VH
A1
A2
A3
A4
FG

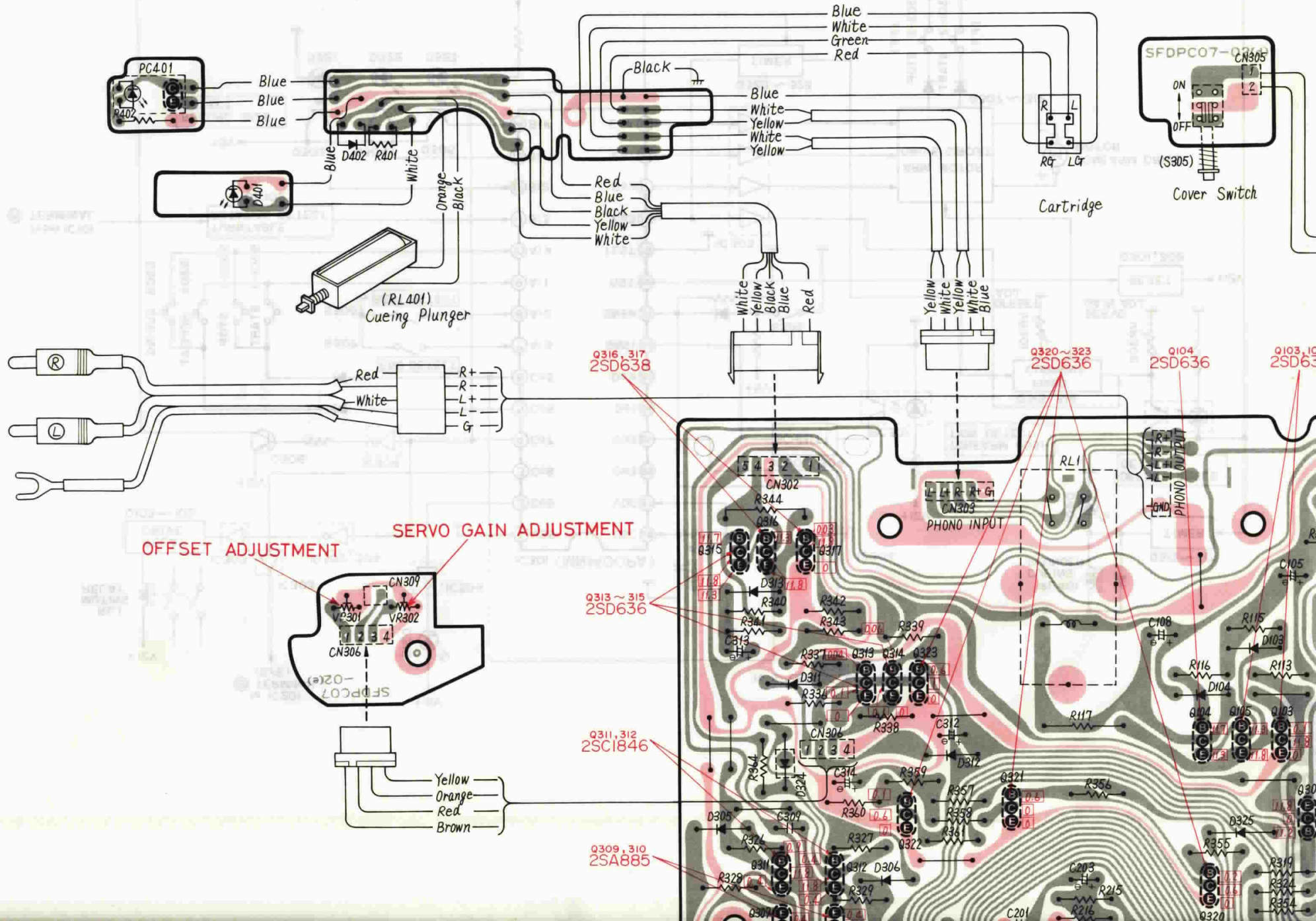

PC401
R402
Blue
Blue
Blue
D402
R401
White
D401
Orange
Black
(RL401)
Cueing Plunger
Black
Blue
White
Green
Red
Blue
White
Yellow
White
Yellow
Red
Blue
Black
Yellow
White
White
Yellow
Black
Blue
Red
Yellow
White
Yellow
White
Blue
R
L
RG
LG
Cartridge
SFDPC07-02(e)
CN305
ON
OFF
(S305)
Cover Switch
R
L
Red
White
R+
R-
L+
L-
G
Q316, 317
2SD638
Q320~323
2SD636
Q104
2SD636
Q313~315
2SD636
Q311, 312
2SC1846
Q309, 310
2SA885
CN302
CN303
PHONO INPUT
RL1
PHONO OUTPUT
GND
SERVO GAIN ADJUSTMENT
OFFSET ADJUSTMENT
CN309
VR301
VR302
CN306
SFDPC07-02(e)
Yellow
Orange
Red
Brown

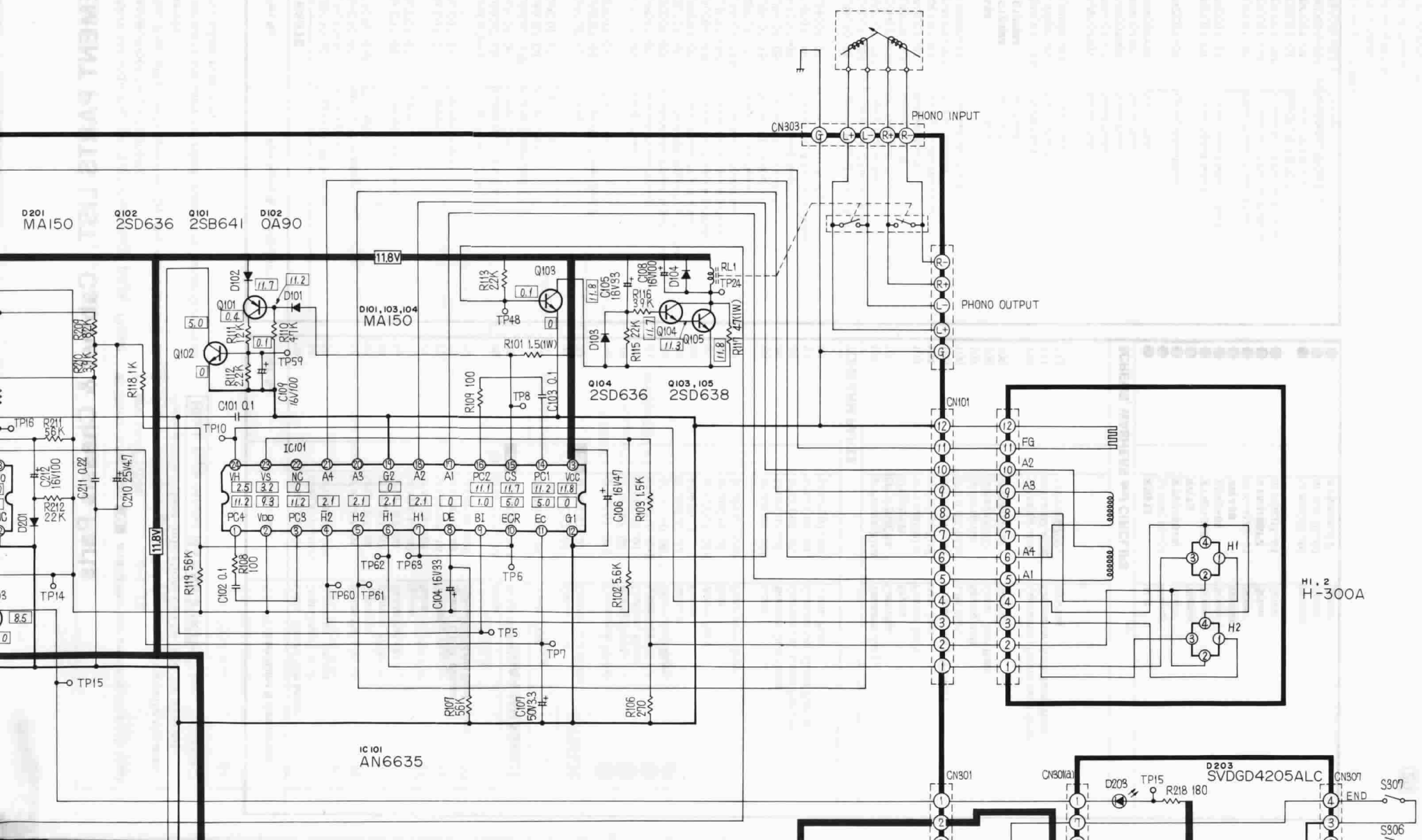

PHONO INPUT
CN303
PHONO OUTPUT
D201
MA150
Q102
2SD636
Q101
2SB641
D102
0A90
11.8V
D101,103,104
MA150
Q103
Q104
2SD636
Q103,105
2SD638
IC101
AN6635
CN101
FG
A2
A3
A4
A1
H1
H2
H1,2
H-300A
CN301
CN301(a)
D203
SVDGD4205ALC
CN307
END
S307
S306

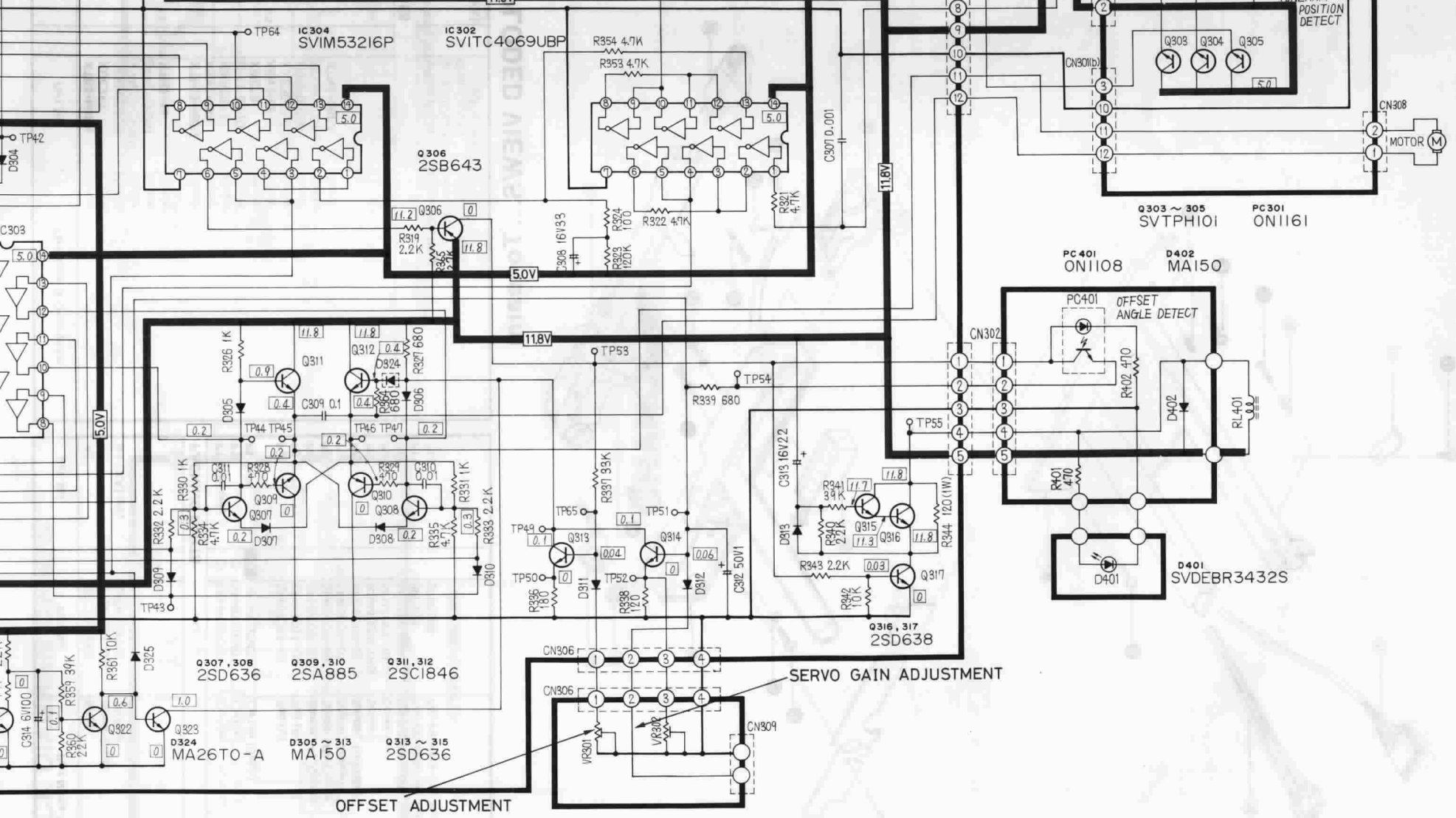

IC304
SVIM53216P
IC302
SVITC4069UBP
Q306
2SB643
POSITION DETECT
Q303 ~ 305
SVTPH101
PC301
ON1161
PC401
ON1108
D402
MA150
OFFSET ANGLE DETECT
D401
SVDEBR3432S
Q316, 317
2SD638
Q307, 308
2SD636
Q309, 310
2SA885
Q311, 312
2SC1846
D324
MA26TO-A
D305 ~ 313
MA150
Q313 ~ 315
2SD636
SERVO GAIN ADJUSTMENT
OFFSET ADJUSTMENT
MOTOR
5.0V
11.8V

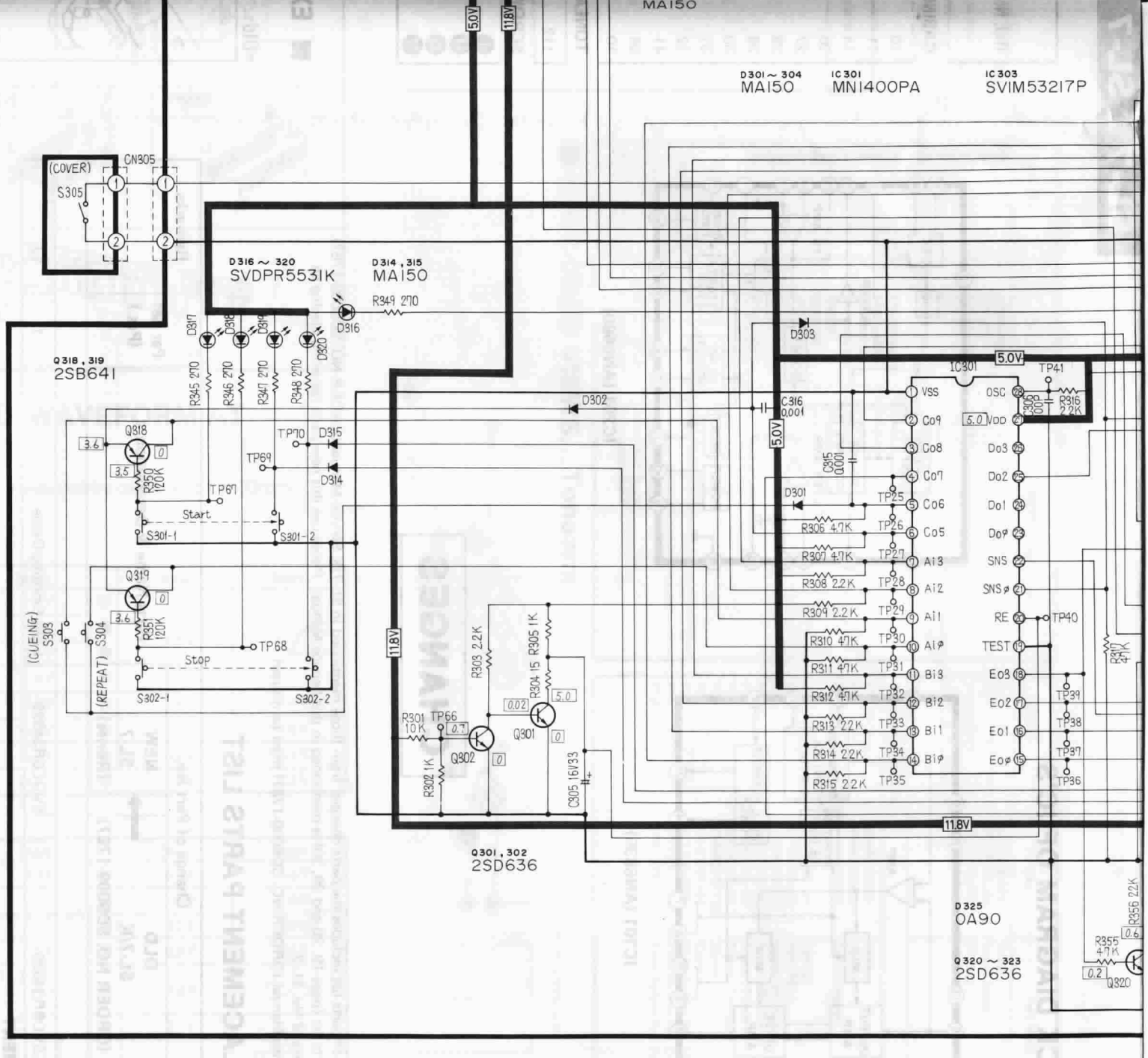
MA150
D301 ~ 304
MA150
IC301
MN1400PA
IC303
SVIM53217P
(COVER)
CN305
S305
D316 ~ 320
SVDPR5531K
D314, 315
MA150
R349 270
D316
D317
D318
D319
D320
R345 270
R346 270
R347 270
R348 270
Q318, 319
2SB641
Q818
R350 120K
TP67
Start
S301-1
S301-2
TP70
D315
TP69
D314
Q319
R351 120K
TP68
Stop
S302-1
S302-2
(CUEING)
S303
(REPEAT)
S304
D302
C316 0.001
5.0V
11.8V
D303
IC301
TP41
C315 0.001
D301
R306 4.7K
R307 4.7K
R308 2.2K
R309 2.2K
R310 47K
R311 47K
R312 47K
R313 2.2K
R314 2.2K
R315 2.2K
TP25
TP26
TP27
TP28
TP29
TP30
TP31
TP32
TP33
TP34
TP35
VSS
Co9
Co8
Co7
Co6
Co5
Ai3
Ai2
Ai1
Ai0
Bi3
Bi2
Bi1
Bi0
OSC
VDD
Do3
Do2
Do1
Do0
SNS
SNS0
RE
TEST
Eo3
Eo2
Eo1
Eo0
C306 100P
R316 2.2K
TP40
R317 47K
TP39
TP38
TP37
TP36
R303 2.2K
R304 15
R305 1K
Q301
R301 10K
TP66
Q802
R302 1K
C305 16V33
Q301, 302
2SD636
D325
0A90
Q320 ~ 323
2SD636
R355 4.7K
R356 2.2K
Q320

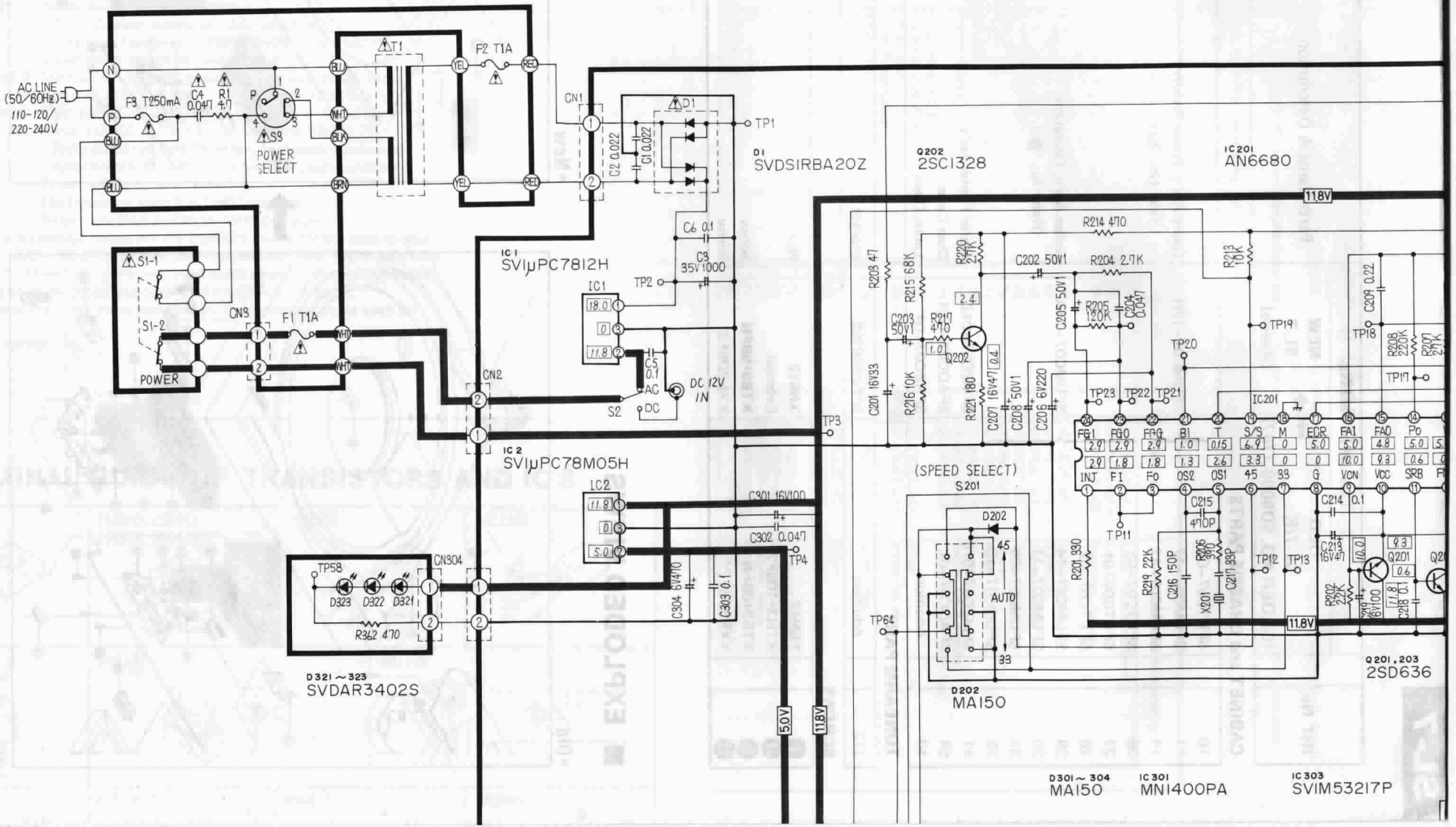
AC LINE
(50/60Hz)
110-120/
220-240V
F3 T250mA
C4 0.047
R1 4.7
POWER
SELECT
S3
T1
F2 T1A
CN1
D1
SVDSIRBA20Z
C2 0.022
C1 0.022
TP1
C6 0.1
C3
35V1000
IC1
SVIμPC7812H
TP2
S1-1
S1-2
POWER
CN3
F1 T1A
C5
0.1
AC
DC
DC 12V
IN
S2
CN2
IC2
SVIμPC78M05H
TP3
C301 16V100
C302 0.047
TP4
TP58
D323
D322
D321
CN304
R362 470
D321~323
SVDAR3402S
C304 6V470
C303 0.1
5.0V
11.8V
Q202
2SC1328
IC201
AN6680
R214 470
R220 27K
R213 10K
R209 47
R215 68K
C202 50V1
R204 2.7K
C205 50V1
R205 120K
C204 0.047
C203 50V1
R217 470
Q202
C201 16V33
R216 10K
R221 180
C207 16V47
C208 50V1
C206 6V220
TP19
TP20
TP18
TP17
C209 0.22
R208 220K
R207 27K
TP23
TP22
TP21
IC201
FG1
FG0
FFG
Bi
T
S/S
M
ECR
FA1
FA0
Po
INJ
FI
Fo
OS2
OS1
45
33
G
VCN
Vcc
SRB
C214 0.1
C215 470P
TP11
TP12
TP13
R201 330
R219 22K
C216 150P
R206 390
C217 33P
X201
Q201
R202 22K
C213 16V47
C218 0.1
(SPEED SELECT)
S201
D202
45
AUTO
33
TP64
D202
MA150
Q201,203
2SD636
D301~304
MA150
IC301
MN1400PA
IC303
SVIM53217P

How to remove the surface plate

When adjusting the auto start or return position, remove the surface plate according to the following procedure.

1. Close the upper cabinet.
2. Loosen the surface plate by using a flat head screw driver. **(See photo 11.)**

   Note: The surface plate is secured with double-sided adhesive tape. So, slowly remove the surface plate with care not to scratch the plate.

Photo 11

How to set the tonearm drive rope

If the rope is disengaged or when setting a new rope, follow the procedure below.

1. Remove the dust cover and disc size sensor. **(Refer to "How to remove the dust cover and disc size sensor P.C.B.)**
2. Remove the E-ring ㊻ and washer ㊼ of the arm drive drum, and then remove the drive wheel. **(See photo 12.)**
3. Turn over the arm drive drum, and set the rope in order of ① ~ ③ as shown in **Fig. 8-A.**
4. Holding the rope being set over the arm drive durn, set up the drive drum and rope in order of ④ ~ ⑤ as shown in **Fig. 8-B.**
5. After setting the rope, turn the worm gear by hand to adjust the tonearm and rope retainer and then secure the part.
6. Make sure that the tonearm moves when the worm gear is turned by hand.
7. Attach the E-ring ㊻ and washer ㊼ . **(See photo 12.)**

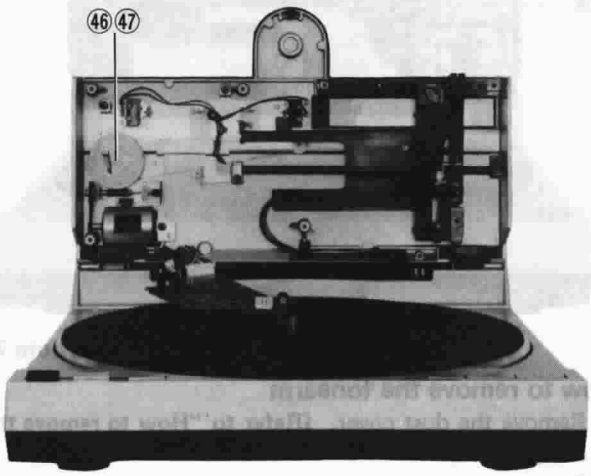

Photo 12

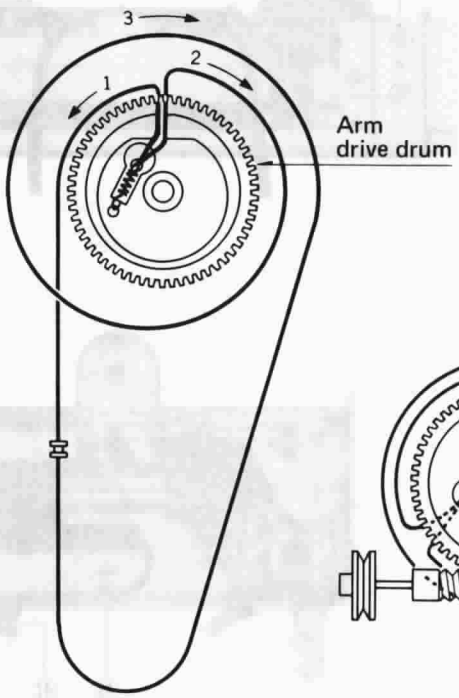

Fig. 8-A

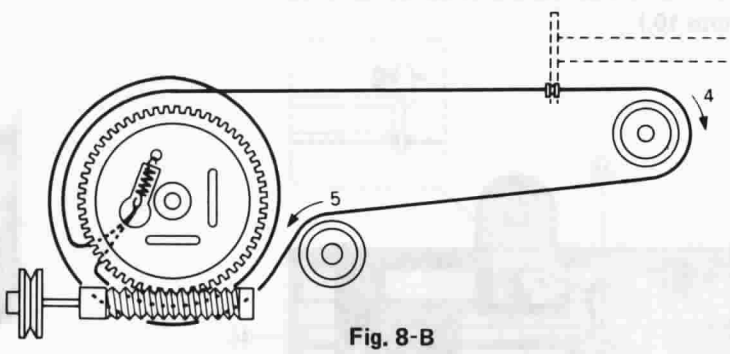

Fig. 8-B

■ DESCRIPTION OF CONNECTOR

There are two types of connectors used in this unit: one is directly soldered to the printed circuit board, and the other is of insertion type.

Note: That soldered connectors cannot be pulled out.

The types of connectors and their positions are shown **Fig. 9.**

▨ _ _ _ _ _ _ Soldered

□ _ _ _ _ _ _ Inserted

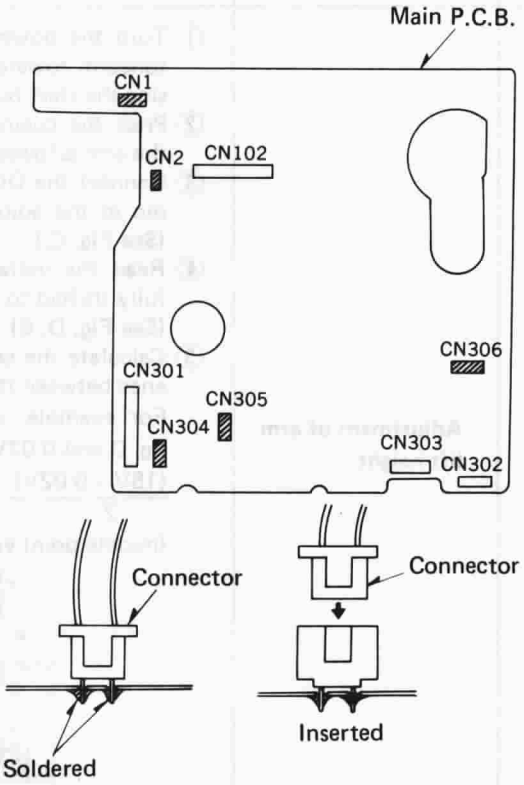

Fig. 9

■ REPLACEMENT OF HALL ELEMENT

When replacing the Hall element of the stator fram, be sure to place it with the marking side up as shown **Fig. 10.**

* The leg position is not specified provided that the marking side is up.

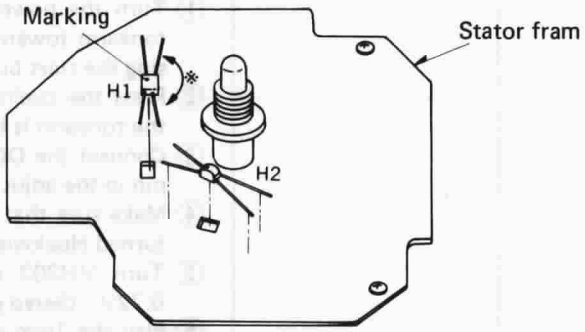

Fig. 10

Adjustment of auto start and auto return position

Auto start position

(Be sure to use a 30cm disc for the adjustment.)

1. Remove the surface plate. **(Refer to "How to remove the surface plate".)**
2. Make sure that the tonearm is at the start position (tonearm rest position)
3. Make the adjustment by turning the auto start position adjust screw. **(See photo 13.)**
   - **If the tonearm lowers after passing over the start position.** . . . . . Turn the adjust screw clockwise
   - **If the tonearm lowers before reaching the start position.** . . . . . Turn the adjust screw counterclockwise.
4. After the adjustment, remember to lock the adjust screw with bond.

Auto return position

(Be sure to use a 17cm disc for the adjustment.)

1. Remove the surface plate. **(Refer to "How to remove the surface plate".)**
2. Make the adjustment by inserting a flat head screwdriver into the adjusting hole. **(See photo 13.)**
   - **If the tonearm returns before the end of the play** . . . . . Turn the screwdriver clockwise.
   - **If the tonearm does not return even after the end of the play**. . . . . Turn the screwdriver counterclockwise.

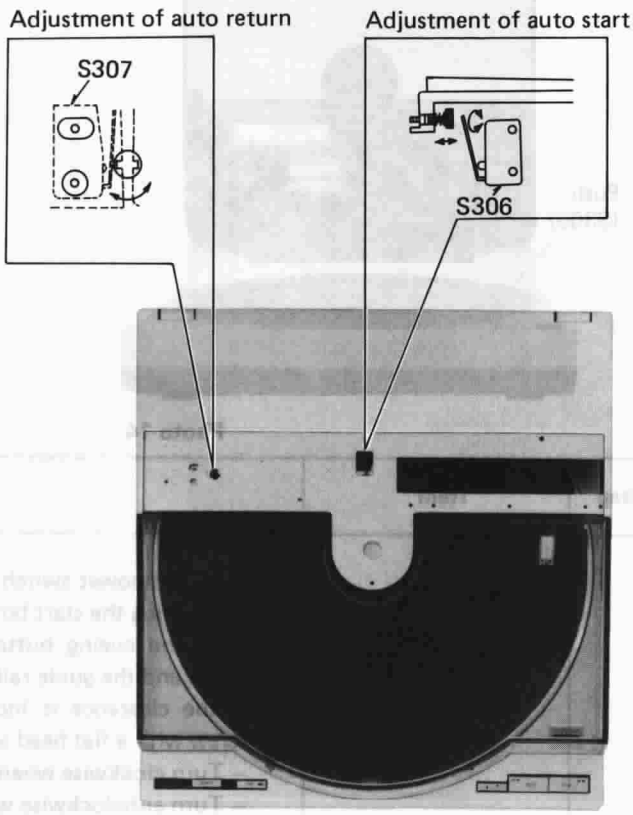

Photo 13

Adjustment for the stylus pressure (See Fig. 11.)

Stylus pressure is normally set to 1.25 grams but may be raised or lowered by ± 0.25 grams. It may be necessary to increase stylus pressure when playing records cut at high levels, or when room temperature is low, or when the unit easily picks up eaternal vibrations. This will help prevent distortion and groove-skipping. To adjust sylus pressure, turn either way, as shown in the diagram. The screw is coupled to the graduated ring.

Note: Do not turn the stylus pressure adjustment screw further than the set limits (1.5 g ~ 1.0 g)

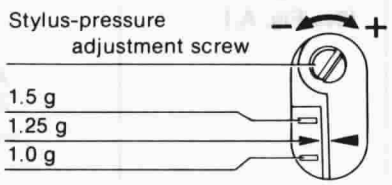

Fig. 11

Offset adjustment of tonearm and servo gain

After repair of the tonearm and arm drive circuit, make the adjustment according to the following procedure.

Tools and equipment used

1. DC Voltmeter or tester
2. 1mm pitch record
3. Flat head screwdriver (small)
4. Philips head screwdriver (small)
5. Hexagon wrench (1.5M)

Condition of the set

1. Remove the dust cover and surface plate. **(Refer to "Disassembly instructions".)**
2. Set the disc size select knob to the 30cm position.
3. Turn the cover switch (S305) "on" by pressint it with tape. **(See photo 14.)**
4. Remove the lable on the rear cover. **(See photo 15.)**
5. Completely open the upper cabinet and make sure that the tonearm operates when the start button is pressed.

Photo 14

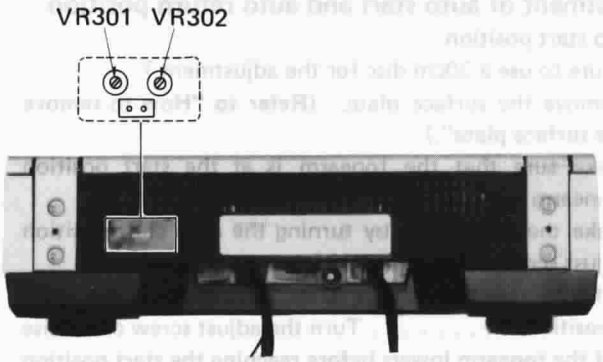

Photo 15

Step	Item	Adjustment method
1	**Adjustment of arm lift height (See Fig. A.)**	① Turn the power switch "on" and move the tonearm towards the center of disc by pressing the start button. ② Press the cueing button to check that the clearance between the cartridge stylus and the guide rail is about 26mm. ③ If the clearance is incorrect, adjust the lift height by turning the adjusting screw with a flat head screwdriver. – Turn clockwise when excessive (> 26mm). – Turn anticlockwise when insufficient (< 26mm). **Note:** The lift height adjusting screws of the replacement tonearm is completely tightened up. So, loosen the adjusting screw before making the above adjustment. 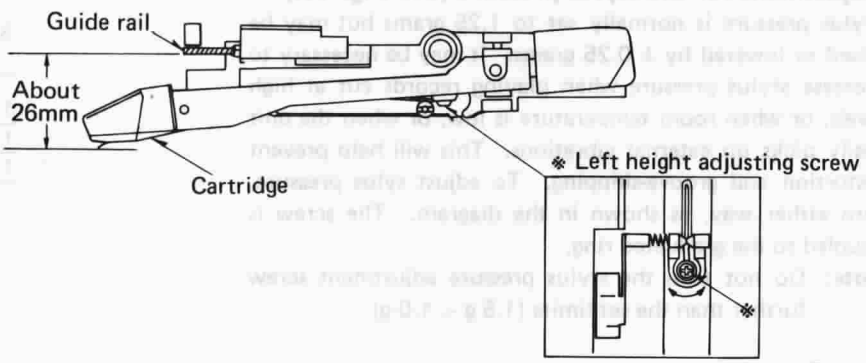 **Fig. A**
2	**Offset angle adjustment of tonearm (See Fig. B.)**	① Turn the power switch "on" and move the tonearm towards the center of disc by pressing the start button. ② Make sure that the arm center is aligned with the V groove of the lift lever. ③ Make sure that the arm base is in parallel with the arm. (Check the clearance between Ⓐ and Ⓑ in **Fig. B.**) ④ If the arm base is not in parallel with the arm, adjust it by turning the offset angle adjusting screw. 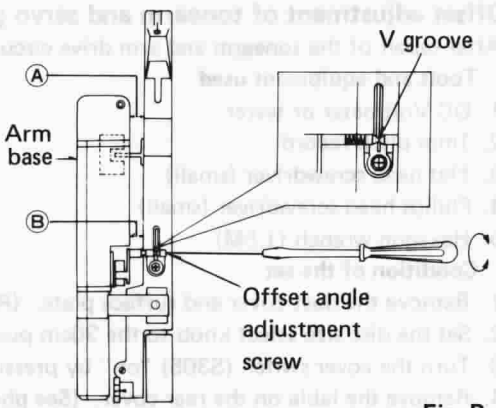 **Fig. B**

Step	Item	Adjustment method
3	**Adjustment of arm lift height**	① Turn the power switch "on" and move the tonearm towards the center of disc by pressing the start button. ② Press the cueing button and make sure that the arm is lowered. ③ Connect the DC Voltmeter to the connector pin in the adjusting hole of the rear cover. **(See Fig. C.)** ④ Read the voltage values with the tonearm fully shifted to the right and left respectively. **(See Fig. D, E)** ⑤ Calculate the center voltage from the difference between the two voltage values. For example, when the voltage is 15V in fig. D and 0.02V in fig. E then $\frac{(15V - 0.02V)}{2} + 0.02V = 7.49V$ (middle point voltage) 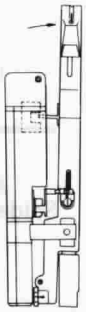 Fig. D 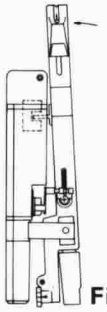 Fig. E 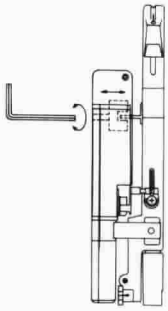 Fig. F 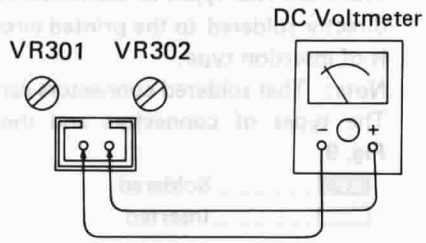 Fig. C ⑥ Set the tonearm to the center position, and turn the adjusting screw of the arm base by a haxagon wrench until the center voltage is achieved. **(See Fig. E.)**
4	**Servo gain and offset adjustment**	**Adjustment, removing the dust cover: (See Fig. G.)** ① Turn the power switch "on" and move the tonearm towards the center of disc by pressing the start button. ② Press the cueing button and make sure that the tonearm is lowered. ③ Connect the DC Voltmeter to the connector pin in the adjusting hole of the rear cover. ④ Make sure that VR301 has been completely turned clockwise. ⑤ Turn VR302 the DC Voltmeter indicates 0.72V. **(Servo gain adjustment)** ⑥ Play the 1mm-pitch record on the turntable. ⑦ Turn VR301 until the DC Voltmeter indicates 0.6V. **(Offset adjustment)** **Adjustment without removing the dust cover: (See Fig. H.)** ① Put a recrod on the turntable. ② Open the dustcover 1 or 2cm, turn the power switch "on" and lower the tonearm. (In this case, do not allow the stylus to touch the disc.) ③ Connect the DC Voltmeter to the connector pin in the adjusting hole of the rear cover. ④ Make sure that VR301 has been completely turned clockwise. ⑤ Turn VR302 until the DC Voltmeter indicates 0.72V. **(Servo gain adjustment)** ⑥ Put a 1mm-pitch record on the turntable, close the dust cover, and play the record. ⑦ Turn VR301 until the DC Voltmeter indicates 0.6V. **(Offset adjustment)** 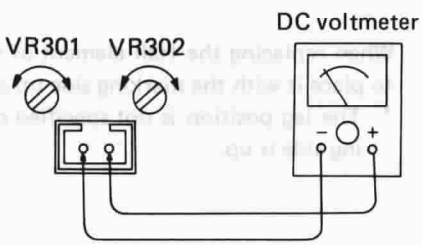 Fig. G 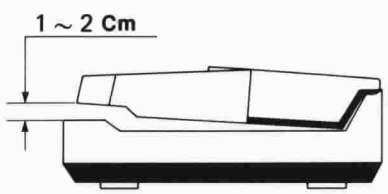 Fig. H

Justierung der Auto-start-und Auto-Rükkehr-Position

Auto-Start-Position

(Für die Justierung ist eine 30cm-Schallplatte zu verwenden.)

1. Die Deckplatte abnehmen. **(Siehe "Entfernen der Deckplatte.")**
2. Überprüfen, daß der Tonarm in der Start-Position ist (Tonearm-Ruheposition.)
3. Die Justierung durch Drehen der Auto-Start-Position-Justierschraube vornehmen. **(Siehe Foto 13.)**
   - Wenn der Tonarm nach Überschreiten der Start-Position (zu spät) abgesenkt wird, die Justierschraube im Uhrzeigersinn drehen.
   - Wenn der Tonarm vor dem Erreichen der Start-Position (zu früh) abgesenkt wird, die Justierschraube entgegen dem Uhrzeigersinn drehen.
4. Nach erfolgter Justierung muß die Justierschraube mit Lack gesichert werden.

Auto-Rückkahr-Position

(Für die Justierung ist eine 17cm-Schallplatte zu verwenden.)

1. Die Deckplatte abnehmen. **(Siehe "Entfernen der Deckplatte".)**
2. Zum Durchführen der Justierung, einen Flachkopf-Schraubenzieher in das Justierloch einführen. **(Siehe Foto 13.)**
   - Wenn der Tonarm vor dem Ende des Abspielens zurückkehrt, den Schraubenzieher im Uhrzeigersinn drehen.
   - Wenn der Tonarm nach dem Ende des Abspielens nicht zurückkehrt, den Schraubenzieher entgegen dem Uhrzeigersinn drehen.

Justieren Sie die Auflagekraft in dem folgenden Fällen

(Shiehe Abb. 11.)

Die normale Auflagekraft beträgt 1.25g, doch kann sie um ± 0.25g gesenkt oder erhöht werden.

Es könnte notwendig sein, die Auflagekraft zu erhöhen, wenn Platten abgespielt werden, die bei hohem Pegel geschnitten wurden, wenn die Raumtemperatur tief ist, oder wenn der Plattenspieler externer Vibration ausgesetzt ist. Dies hilft dabei, Verzerrung und Überspringen der Rillen zu vermeiden.

Zum Justieren der Auflagekraft kann die Schraube nach links oder rechts gedreht werden, wie in der Skizze gezeigt. Die Schraube ist mit dem gradierten Ring gekoppelt.

Anmerkung:

Drehen Sie die Auflagekraft-Justierschraube nie weiter, als bis zu den Begrenzungen (1.5 g ~ 1.0 g)

Reibungswinkel-Justierung des Tonearms und der Servo-Verstärkung

Nach der Reparatur des Tonarms und der Tonarm-Antriebsschaltung, sind die folgenden Justierungen durchzuführen.

Benötigte Werkzeuge und Instrumente

1. Gleichstrom voltmeter oder Prüfaerät.
2. Platte mit 1mm-Rillenabstand
3. Flachkopf-Schraubenzieher (klein)
4. Kreuzkopf-Schraubenzieher (Philips) (klein)
5. Sechskant-Schlüssel (1.5M)

Zustand des Gerätes

1. Die Staubabdeckung und die Plattentellerauflage entfernen. **(Siehe "Service-Methode".)**
2. Den Plattengröße-Wahlschalter in die 30cm-Position stellen.
3. Den Deckelschalter (S305) durch Drücken mit Band einschalten. **(Siehe Foto 14.)**
4. Das Etikett an der Rückseite entfernen. **(Siehe Foto 15.)**
5. Das obere Gehäuse vollständig öffnen und überprüfen, daß der Tonarm funktioniert, wenn die Start-Taste gedrückt wird.

Schritt	Einstellgegenstand	Justiermethode
1	**Justierung der Tonarm-Lifthöhe (Siehe Abb. A)**	① Den Netzschalter einschalten und den Tonarm durch Drücken der Start-Taste gegen die Plattenmitte bewegen. ② Die Lifttaste drücken und überprüfen, daß der Abstand zwischen der Tonabnehmer-Nadelspitze und Führungsschiene ca. 26mm beträgt. ③ Falls der Abstand nicht korrekt ist, die Lifthöhe durch Drehen der Justierschraube mit einem Flachkopf-Schraubenzieher justieren. – Bei zu großem Abstand: im Uhrzeigersinn drehen (> 26mm). – Bei zu kleinem Abstand: entgegen dem Uhrzeigersinn drehen (< 26mm). **Anmerkung:** Die Lifthöhe-Justierschraube des Ersatztonarms its vollständig angezogen. Die Justierschraube ist daher vor dem Durchführen obiger Justierung zu lösen.
2	**Reibungswinkel-Justierung des Tonarms (Siehe Abb. B)**	① Den Netzschalter einschalten und den Tonarm durch Drücken der Start-Taste gegen die Plattenmitte bewegen. ② Überprüfen, daß die Tonarmmitte mit der V-Kerbe des Liftachse übereinstimmt. ③ Überprüfen, daß der Tonarmträger parallel zum Tonarm ist. (Den Abstand zwischen Ⓐ und Ⓑ **Abb. B.** überprüfen.) ④ Falls der Tonarmträger nicht parallel zum Tonarm ist, durch Drehen der Reibungswinkel-Justierschraube justieren.
3	**Justierung der Tonarm-Empfindlichkeit**	① Den Netzschalter einschalten und den Tonarm durch Drücken der Start-Taste gegen die Plattenmitte bewegen. ② Die Lifttaste drücken und überprüfen, daß der Tonarm abgesenkt wird. ③ Den Gleichstromvoltmeter an den Steckerstift im Justierloch der Rückseite anschließen. **(Siehe Abb. C)** ④ Die Spannungswerte bei der Position des Tonarms ganz rechts, bzw. ganz links, ablesen. **(Siehe Abb. D und E)** ⑤ Vom Unterschied zwischen den beiden Spannungswerten die Mittelspannung berechnen. Zum Beispiel, wenn die Spannung in Abb. D 15V, und in Abb. E), 0.02V beträgt: $\frac{(15V - 0.02V)}{2} + 0.02V = 7.49V$ (Mittelpunkt-Spannung) ⑥ Den Tonarm in die Mittelposition stellen, und die Justierschraube der Armbasis mit dem Sechskantschlüssel drehen, bis die Mittenspannung erreicht wird. **(Siehe Abb. F)**
4	**Servo-Verstärkungs-und Reibungswinkel-Justierung**	**Justierung mit Entfernen der Staubabdeckung: (Siehe Abb. G)** ① Den Netzschalter einschalten, und den Tonarm durch Drücken der Start-Taste gegen die Plattenmitte bewegen. ② Die Lifttaste drücken und überprüfen, daß der Tonarm abgesenkt wird. ③ Den Gleichstromvoltmeter an den Steckerstift im Justierloch an der Rückseite anschließen. ④ Überprüfer, daß VR301 bis zum Anschlag im Uhrzeigersinn gedreht worden ist. ⑤ VR302 drehen, bis der Gleichstromvoltmeter 0.72V anzeigt. **(Servo-Verstärkungs-Justierung)** ⑥ Die Platte mit 1mm-Rillenabstand auf dem Plattenspieler abspielen. ⑦ VR301 drehen, bis der Gleichstromvoltmeter 0.6V anzeigt. **(Ausgleichsjustierung)** **Justierung ohne Entfernen der Staubabdeckung: (Siehe Abb. H)** ① Eine Schallplatte auf den Plattenteller auflegen. ② Die Staubabdeckung 1 oder 2cm öffenen, den Netzschalter einschelten, und den Tonarm absenken. (In diesem Fall darauf achten, daß Abtastnadel die Platte nicht berührt.) ③ Den Gleichstromvoltmeter an den Steckerstift im Justierloch an der Rückseite anschließen. ④ Überprüfen, daß VR301 bis zum Anschlag im Uhrzeigersinn gedreht worden ist. ⑤ VR302 drehen, bis der Gleichstromvoltmeter 0.72V anzeigt. **(Servo-Verstärkungs-Justierung)** ⑥ Die Platte mit 1mm-Rillenabstand auf den Plattenteller auflegen, die Staubabdeckung schließen, und die Platte abspielen. ⑦ VR301 drehen, bis der Gleichstromvoltmeter 0.6V anzeigt. **(Ausgleichsjustierung)**

Mise au point du positionnement du démarrage automatique et de retour automatique

Positionnement du démarrage automatique

(S'assurer d'utiliser un disque de 30cm pour la mise au point.)

1. Retirer la plaque de surface. **(Se référer à "Comment enlever la plaque de surface.")**
2. S'assurer que le bras de lecture est sur la position de démarrage (position de l'accoudoir du bras de lecture).
3. Exécuter la mise au point en tournant la vis de réglage de positionnement du démarrage automatique. **(Voir la photo 13.)**
   - Si le bras de lecture s'abaisse en franchissant la position de démarrage, tourner la vis de réglage dans le sens des aiguilles d'une montre.
   - Si le bras de lecture s'abaisse avant d'atteindre la position de démarrage, tourner la vis de réglage dans le sens inverse des aiguilles d'une montre.
4. Après la mise au point, se rappeler de bloquer la vis de réglage.

Positionnement du retour automatique

(S'assurer d'utiliser un disque de 17cm pour la mise au point.)

1. Retirer la plaque de surface. **(Se référer à "Comment enlever la plaque de surface.")**
2. Exécuter la mise au point en introduisant un tournevis à tête plate dans l'orifice de réglage. **(Voir photo 13.)**
   - Si le bras de lecture revient avant la fin de l'audition, tourner le tournevis dans le sens des aiguilles d'une montre.
   - Si le bras de lecture ne revient pas, même après la fin de l'audition, tourner le tournevis dans le sens inverse des aiguilles d'une montre.

Mettre au point la force verticale d'appui de la pointe de lecture dans les cas suivants. (Voir Fig. 11)

La force verticale d'appui de la pointe de lecture est normalement réglée sur 1.25 gramme, mais elle peut être augmentée ou diminuée de ± 0.25 gramme.

Il pourra être nécessaire d'augmenter la force verticale d'appui de la pointe lorsqu' on joue des disques enregistrés à des niveaux élevés, ou lorsque la température de la piéce est trop basse, ou encore lorsque l'appareil capte facilement des vibrations extérieures.

Cela aidera à empêcher une distorsion et un sautillement des sillons. Pour régler cette force verticale d'appui de la pointe de lecture, tourner la vis de réglage d'un côte ou de l'autre, comme il est montré sur le schéma. La vis est couplée avec la bague graduée.

Nota:

Ne pas tourner lar vis de réglage de la force verticale d'appui de la pointe de lecture plus que les limites de réglage admissibles (1.5 ~ 1.0 g).

Mise au point du décalage du bras de lecture et de l'amplification servomécanique

Après la révision du bras de lecture et du circuit d'entraînement du bras, exécuter la mise au point suivante selon la procédure ci-dessous:

Outils et équipement à utiliser

1. DC VTVM ou vérificateur
2. Disque de 1mm d'écart
3. Tournevis à tête plate (petit)
4. Tournevis à tête plate Philips (petit)
5. Clef hexagonal (1.5M)

Condition du réglage

1. Retirer le couvercle de protection et la plaque de surface. **(Se référer à la "Méthode de réglage.")**
2. Placer la manette sélectriqce de diamètre du disque sur la position de 30cm.
3. Mettre en marche le commutateur du couvercle (S305) en appuyant dessus avec un ruban. **(Voir photo 14.)**
4. Retirer l'étiquette sur l'arrière du couvercle. **(Voir photo 15.)**
5. Ouvrir complètement le boîtier supérieur et s'assurer que le bras de lecture fonctionne lorsqu' on appuie sur la touche de démarrage.

Etape	Article	Méthode de réglage	
1	**Mise au point de la hauteur d'élévation (Voir Fig. A.)**	① Mettre en marche l'interrupteur d'alimentation et déplacer le bras de lecture vers le centre du disque en appuyant sur la touche de démarrage. ② Appuyer sur la touche de pose/relevage pour vérifier si l'intervalle entre la pointe de lecture de la cellule pick-up et le rail de guidage est d' à peu près 26 mm. ③ Si l'intervalle n'est pas suffisant, adjuster la hauteur d'élévation en tournant la vis de réglage avec un tournevis à tête plate.	–Tourner dans le sens des aiguilles d'une montre si l'intervalle est excessif ($>$ 26 mm). –Tourner dans le sens inverse des aiguilles d'une montre lorsque l'intervalle est insuffisant ($<$ 26 mm). **Nota:** La vis de réglage de la hauteur d'élévation du bras de lecture de rechange est serrée à fond. Aussi, desserrer la vis de réglage avant de faire la mise au point ci-dessus.
2	**Mise au point de l'angle de décalage du bras de lecture (Voir Fig. B.)**	① Mettre en marche l'interrupteur d'alimentation et déplacer le bras de lecture vers le centre du disque en appuyant sur la touche de démarrage. ② S'assurer que le centre du bras soit aligné avec l'encoche en V de la tige d'élévation.	③ S'assurer que le socle du bras est parallèle au bras. (Vérifier l'intervalle entre Ⓐ et Ⓑ, dans la Fig. B.) ④ Si le socle du bras n'est pas parallèle au bras, l'ajuster en tournant la vis de réglage de l'angle de décalage.
3	**Mise au point de la sensibilité du bras**	① Mettre en marche l'interrupteur d'alimentation et déplacer le bras de lecture vers le centre du disque en appuyant sur la touche de démarrage. ② Appuyer sur la touche de pose/relevage et s'assurer que le bras est abaissé. ③ Brancher la DC VTVM à la broche du connecteur dans l'orifice de mise au point du couvercle arrière. **(Voir la Fig. C.)** ④ Observer les valeurs de la tension avec le bras de lecture complètement orienté vers la droite puis vers la gauche. **(Voir les Figs. D et E.)**	⑤ Calculer la tension moyenne provenant de la différence entre les deux valeurs de tension. Par exemple. lorsque la tension est de 15V dans la Fig. D et de 0.02V dans la Fig. E, puis: $\frac{(15V - 0.02V)}{2} + 0.02V = 7.49V$ (tension du point médian). ⑥ Placer le bras de lecture sur la position du centre et tourner la vis de réglage du socle du bras avec une clef hexagonale jusqu' à ce que la tension médiane soit obtenue. **(Voir Fig. F.)**
4	**Mise au point du décalage et de l'amplification servomécanique**	**Ajustement en retirant le couvercle du protection. (Voir Fig. G.)** ① Mettre en marche l'interrupteur d'alimentation et déplacer le bras de lecture vers le centre du disque en appuyant sur la touche de démarrage. ② Appuyer sur la touche de pose/relevage et s'assurer que le bras de lecture est abaissé. ③ Brancher le DC VTVM à la broche du connecteur dans l'orifice de mise au point du couvercle arrière. ④ S'assurer que VR301 à été entièrement tourné dans le sens des aiguilles d'une montre. ⑤ Tourner VR302 jusqu' à ce que le DC VTVM indique 0.72V. **(Mise au point de l'amplification servomécanique.)** ⑥ Faire jouer sur la platine un disque de 1mm d' écart. ⑦ Tourner VR301 jusqu' à ce que la DC VTVM indique 0.6V. **(Mise au point du décalage.)**	**Ajustement sans retirer le couvercle de protection (Voir Fig. H.)** ① Placer un disque sur la platine. ② Ouvrir le couvercle de protection de 1 à 2 cm, mettre en marche l'interrupteur d'alimentation et abaisser le bras de lecture. (Dans ce cas, ne pas laisser la pointe de lecture toucher le disque.) ③ Brancher la DC VTVM à la broche du connecteur dans l'orifice de mise au point du couvercle arrière. ④ S'assurer que VR301 a été entièrement tourne dans le sens des aiguilles d'une montre. ⑤ Tourner VR302 jusqu' à ce que le DC VTVM indique 0.72V. **(Mise au point de l'amplification servomécanique.)** ⑥ Placer un disque de 1 mm d'écart sur la platine, refermer le couvercle de protection et faire jouer le disque. ⑦ Tourner VR301 jusqu' à ce que le DC VTVM indique 0.6V. **(Mise au point de décalage.)**

■ REPLACEMENT PARTS LIST...Electric Parts

Notes: 1. Part numbers are indicated on most mechanical parts. Please use this part number for parts orders.
2. ⚠ indicates that only parts specified by the manufacturer be used for safety.
3. Bracketed indications in Ref. No. columns specify the area. Parts without these indications can be used for all areas.

Ref. No.		Part No.	Part Name & Description
INTEGRATED CIRCUITS			
IC1		SVIUPC7812H	IC, Regulator
IC2		SVIUPC78M05H	IC, Regulator
IC101		AN6635	IC, Drive
IC201		AN6680	IC, Control
IC301		MN1400PA	IC, Micro Computer
IC302		SVITC4069	IC, Inverter
IC303		SVIM53217P	IC, Buffer
IC304		SVIM53216P	IC, Buffer
TRANSISTORS			
Q101		2SB641	Transistor
Q102, 104		2SD636	Transistor
Q103, 105		2SD638	Transistor
Q201, 203		2SD636	Transistor
Q202		**2SC1328–T**	Transistor
Q301, 302		2SD636	Transistor
307, 308,			
313 ~ 315			
320 ~ 323			
Q303 ~ 305		SVTPH101–Q2	Photo Transistor
Q306		2SB643	Transistor
Q309, 310		2SA885	Transistor
Q311, 312		2SC1846–R	Transistor
Q316, 317		2SD638	Transistor
Q318, 319		2SB641	Transistor
DIODES			
D1	⚠	SVDS1RBA20Z	Rectifier
D101, 103, 104		**MA162A**	Diode
D102		**20A90**	Diode
D201, 202		**MA162A**	Diode
D203		SVDGD4205ALC	Light Emitting Diode, Strobe
D301 ~ 315		**MA162A**	Diode
D316 ~ 320		SVDPR5531K	Light Emitting Diode
D321 ~ 323		SVDAR3402S	Light Emitting Diode, Record Size Select
D324		**MA26TO–A**	Diode
D325		**20A90**	Diode
D401		SVDEBR3432S	Light Emitting Diode
D402		**MA162A**	Diode
PHOTO INTERRUPTERS			
PC301		ON1161	Photo Interrupter
PC302		ON1108	Photo Interrupter
HALL ELEMENT			
H1, H2		H-300A	Hall Element
CRYSTAL			
X201		SVQU306115	Crystal
RELAY			
RL1		SFDSC07–01	Relay, Muting
RL401		SFDZC07–01E	Plunger, Cueing
SWITCHES			
S1–1	⚠	SFDSSS5GLS	Switch, Power
S1–2	⚠	SFDSTWM9901	Switch, Power
S3	⚠	SFDSHXW01317	Switch, Power Select
S201		SFDSC10–01	Switch, Speed Select
S301, 302		EVQQBR08K	Switch, Start & Stop
S303, 304		EVQQXR04K	Switch, Repeat & Cueing
S305		ESB6247	Switch, Cover
S306, 307		SFDSAH252461	Switch, End & Rest Detect

Ref. No.		Part No.	Part Name & Description
VARIABLE RESISTORS			
VR301		**EVNM0AA00B14**	Offset Adjustment, 10kΩ (B)
VR302		**EVNM0AA00B13**	Servo Gain Adjustment, 1kΩ (B)
FUSE			
F1, 2	⚠	XBA2C10TR0	Fuse, 1A
F3	⚠	XBAS2C025T1A	Fuse, 250mA
POWER TRANSFORMER			
T1	⚠	SLT66PS1E	Power Transformer
RESISTORS			
R1	⚠	**ERD50TJ4R7**	Carbon, 4.7Ω, 1/2W, ± 5%
R101		**ERX1ANJ1R5**	Metallic, 1.5Ω, 1W, ± 5%
R102		**ERD25FJ562**	Carbon, 5.6kΩ, 1/4W, ± 5%
R103		**ERD25FJ152**	Carbon, 1.5kΩ, 1/4W, ± 5%
R106		**ERD25FJ271**	Carbon, 270Ω, 1/4W, ± 5%
R107		**ERD25TJ563**	Carbon, 56kΩ, 1/4W, ± 5%
R108, 109		**ERD25FJ101**	Carbon, 100Ω, 1/4W, ± 5%
R110		**ERD25TJ473**	Carbon, 47kΩ, 1/4W, ± 5%
R111		**ERD25TJ123**	Carbon, 12kΩ, 1/4W, ± 5%
R112, 113		**ERD25FJ222**	Carbon, 2.2kΩ, 1/4W, ± 5%
R115		**ERD25TJ223**	Carbon, 22kΩ, 1/4W, ± 5%
R116		**ERD25TJ393**	Carbon, 39kΩ, 1/4W, ± 5%
R117		**ERG1ANJ470**	Metal Oxide, 47Ω, 1W, ± 5%
R118		**ERD25FJ102**	Carbon, 1kΩ, 1/4W, ± 5%
R119		**ERD25TJ563**	Carbon, 56kΩ, 1/4W, ± 5%
R201		**ERD25FJ331**	Carbon, 330Ω, 1/4W, ± 5%
R202		**ERD25FJ222**	Carbon, 2.2kΩ, 1/4W, ± 5%
R203		**ERD25FJ470**	Carbon, 47Ω, 1/4W, ± 5%
R204		**ERD25FJ272**	Carbon, 2.7kΩ, 1/4W, ± 5%
R205		**ERD25TJ124**	Carbon, 120kΩ, 1/4W, ± 5%
R206		**ERD25FJ391**	Carbon, 390Ω, 1/4W, ± 5%
R207		**ERD25TJ273**	Carbon, 27kΩ, 1/4W, ± 5%
R208		**ERD25TJ224**	Carbon, 220kΩ, 1/4W, ± 5%
R209		**ERD25TJ823**	Carbon, 82kΩ, 1/4W, ± 5%
R210		**ERD25FJ392**	Carbon, 3.9kΩ, 1/4W, ± 5%
R211		**ERD25TJ563**	Carbon, 56kΩ, 1/4W, ± 5%
R212		**ERD25TJ223**	Carbon, 22kΩ, 1/4W, ± 5%
R213		**ERD25FJ103**	Carbon, 10kΩ, 1/4W, ± 5%
R214		**ERD25FJ471**	Carbon, 470Ω, 1/4W, ± 5%
R215		**ERD25TJ683**	Carbon, 68kΩ, 1/4W, ± 5%
R216		**ERD25FJ103**	Carbon, 10kΩ, 1/4W, ± 5%
R217		**ERD25FJ471**	Carbon, 470Ω, 1/4W, ± 5%
R218		**ERD25FJ181**	Carbon, 180Ω, 1/4W, ± 5%
R219		**ERD25TJ223**	Carbon, 22kΩ, 1/4W, ± 5%
R220		**ERD25FJ272**	Carbon, 2.7kΩ, 1/4W, ± 5%
R221		**ERD25FJ181**	Carbon, 180Ω, 1/4W, ± 5%
R301		**ERD25FJ103**	Carbon, 10kΩ, 1/4W, ± 5%
R302		**ERD25FJ102**	Carbon, 1kΩ, 1/4W, ± 5%
R303		**ERD25FJ222**	Carbon, 2.2kΩ, 1/4W, ± 5%
R304		**ERD25FJ150**	Carbon, 15Ω, 1/4W, ± 5%
R305		**ERD25FJ102**	Carbon, 1kΩ, 1/4W, ± 5%
R306, 307		**ERD25FJ472**	Carbon, 4.7kΩ, 1/4W, ± 5%
R308, 309		**ERD25FJ222**	Carbon, 2.2kΩ, 1/4W, ± 5%
R310, 311		**ERD25TJ473**	Carbon, 47kΩ, 1/4W, ± 5%
R312		**ERD25FJ472**	Carbon, 4.7kΩ, 1/4W, ± 5%
R313, 314		**ERD25TJ223**	Carbon, 22kΩ, 1/4W, ± 5%
R315, 316		**ERD25TJ223**	Carbon, 22kΩ, 1/4W, ± 5%
R317		**ERD25TJ473**	Carbon, 47kΩ, 1/4W, ± 5%
R318		**ERD25FJ472**	Carbon, 4.7kΩ, 1/4W, ± 5%
R319		**ERD25FJ222**	Carbon, 2.2kΩ, 1/4W, ± 5%
R320		**ERD25FJ103**	Carbon, 10kΩ, 1/4W, ± 5%
R321, 322		**ERD25FJ472**	Carbon, 4.7kΩ, 1/4W, ± 5%
R323		**ERD25TJ124**	Carbon, 120kΩ, 1/4W, ± 5%
R324		**ERD25FJ101**	Carbon, 100Ω, 1/4W, ± 5%

■ Cartridge section

Type:	Moving magnet stereo cartridge One point suspension system
Magnet:	Samarium cobalt (Sm-Co)
Cantilever:	Pure boron pipe
Magnetic circuit:	All laminated core
Frequency response	10 Hz to 50 kHz 20 Hz to 35 kHz ± 3 dB 20 Hz to 10 kHz ± 1 dB
Output voltage:	2.5 mV at 1 kHz 5 cm/s. zero to peak lateral velocity (7 mV at 1 kHz, 10 cm/s. zero to peak 45° velocity [DIN 45 500])
Channel separation:	More than 22 dB at 1 kHz
Channel balance:	Within 1.8 dB at 1kHz
Recommended load impedance	47 kΩ ~ 100 kΩ
Compliance (dynamic):	12×10^{-6} cm/dyne at 100 Hz
Vertical tracking angle:	20°
Stylue pressure range:	1.25 ± 0.25 g (12.5 ± 2.5mN)
Stylus tip:	0.3 x 0.7 mil (7.5 x 18μm) Elliptical stylus
Weight:	6.0 g (cartridge only)
Replacement stylus:	EPS-202ED

TECHNISCHE DATEN

Änderungen der technischen Daten vorbehalten.
Die angegebenen Gewichts- und Abmessungsdaten sind circa Werte.

■ Allgemeine Daten

Stromversorgung:	~110-120/220-240V, 50/60 Hz Wechselstrom 12V Gleichstrom (Ausgestattet mit Gleichstrom-Eingangsbuchse)
Leistungsaufnahme:	20 W (Wechselstrom) 6 W (Gleichstrom)
Abmessungen (B x H x T):	31.5 x 8.8 x 31.5 cm
Gewicht:	7 kg

■ Plattenspieler

Type:	Quarz-Direktantrieb Automatischer Plattenspieler Auto-Start/Auto-Zuführung Rückführautomatik Stop-Automatik Wiederhol-Betrieb Automatische Drehzahlwahl Automatische Plattengrößewahl 2-Geschwindigkeiten-Suchfunktionen Plattenpräsenz-Registrierung
Antrieb:	Direktantrieb
Motor:	Kollektorloser Gleichstrommotor
Antriebsregel-Methode:	Quarz-Steuerung (QPL)
Plattenteller:	Aluminium-Druckguß Durchmesser 30 cm
Plattenteller-Drehzahlen:	33-1/3 und 45 U/min Automatische Drehzahlwahl (manuelle Wahl möglich)
Drehzahlabweichung:	Innerhalb ± 0.002%
Gleichlaufschwankungen:	0.012% WRMS* 0.025% WRMS (JIS C5521) ± 0.035% Spitze (IEC 98A bewertet)

* Gemessen anhand von Signalen vom eingebauten Frequenzgenerator des Motorbauteils.

Rumpel-Fremdspannungsabstand:	–56 dB (IEC 98A unbewertet)
Rumpel-Geräuschspannungsabstand:	–78 dB (IEC 98A bewertet)

■ Tonarm

Typ:	Dynamisch ausbalancierter Tangential-Tonarm mit Kardanaufhängung mit 4-Punkt-Drehlager
Effektive Länge:	105 mm
Spurfehlwinkel:	Innerhalb ± 0.1°
Effektive Masse:	9 g (einschließlich Tonabnehmer)
Resonanzfrequenz:	12 Hz
Tonarm-Antriebsmotor:	Kernloser Gleichstrommotor

■ Tonabnehmer

Typ:	Stereo-Magnet-Tonabnehmer mit Einpunkt-Aufhängungssystem
Magnet:	Samarium-Kobalt (SM-Co)
Nadelträger:	Röhre aus reinem Bor
Magnetkreis:	Ganzlamellenkern
Frequenzgang:	10 Hz bis 50 kHz 20 Hz bis 35 kHz ± 3 dB 20 Hz bis 10 kHz ± 1 dB
Ausgangsspannung:	2.5mV bie 1 kHz 5 cm/s. Null-zu-Spitze, lateral (7 mV bie 1kHz 10cm/s. Null-zu-Spitze, 45° [DIN 45 500])
Kanalternnung:	Mehr als 22 dB bei 1kHz
Kanalabweichung:	Innerhalb 1.8 dB bei 1 kHz
Empfohlene Endimpedanz:	47kΩ ~ 100kΩ
Nachgiebigkeit (dynamisch):	12×10^{-6} cm/dyn bei 100 Hz
Vertikaler Spurwinkel:	20°
Auflagekraft-Einstellbereich:	1.25 ± 0.25 g (12.5 ± 2.5mN)
Nadelspitze:	0.3 x 0.7 Mil (7.5 x 18μm) Elliptisch geschliffene
Gewicht:	6.0 g (nur Tonabnehmer)
Ersatznadel:	EPS-202ED

Ref. No.		Part No.	Part Name & Description
R325		**ERD25FJ681**	Carbon, 680Ω, 1/4W, ± 5%
R326		**ERD25FJ102**	Carbon, 1kΩ, 1/4W, ± 5%
R327		**ERD25FJ681**	Carbon, 680Ω, 1/4W, ± 5%
R328, 329		**ERD25FJ471**	Carbon, 470Ω, 1/4W, ± 5%
R330, 331		**ERD25FJ102**	Carbon, 1kΩ, 1/4W, ± 5%
R332, 333		**ERD25FJ222**	Carbon, 2.2kΩ, 1/4W, ± 5%
R334, 335		**ERD25FJ472**	Carbon, 4.7kΩ, 1/4W, ± 5%
R336		**ERD25FJ181**	Carbon, 180Ω, 1/4W, ± 5%
R337		**ERD25TJ333**	Carbon, 33kΩ, 1/4W, ± 5%
R338		**ERD25FJ121**	Carbon, 120Ω, 1/4W, ± 5%
R339		**ERD25FJ681**	Carbon, 680Ω, 1/4W, ± 5%
R340		**ERD25TJ223**	Carbon, 22kΩ, 1/4W, ± 5%
R341		**ERD25TJ393**	Carbon, 39kΩ, 1/4W, ± 5%
R342		**ERD25FJ103**	Carbon, 10kΩ, 1/4W, ± 5%
R343		**ERD25FJ222**	Carbon, 2.2kΩ, 1/4W, ± 5%
R344		**ERG1ANJ121**	Metal Oxide, 120Ω, 1W, ± 5%
R345, 346		**ERD25FJ271**	Carbon, 270Ω, 1/4W, ± 5%
R347, 348		**ERD25FJ271**	Carbon, 270Ω, 1/4W, ± 5%
R349		**ERD25FJ271**	Carbon, 270Ω, 1/4W, ± 5%
R350, 351		**ERD25TJ124**	Carbon, 120kΩ, 1/4W, ± 5%
R353, 354		**ERD25FJ472**	Carbon, 4.7kΩ, 1/4W, ± 5%
R355		**ERD25TJ473**	Carbon, 47kΩ, 1/4W, ± 5%
R356, 357		**ERD25TJ223**	Carbon, 22kΩ, 1/4W, ± 5%
R358		**ERD25FJ102**	Carbon, 1kΩ, 1/4W, ± 5%
R359		**ERD25TJ393**	Carbon, 39kΩ, 1/4W, ± 5%
R360		**ERD25TJ223**	Carbon, 22kΩ, 1/4W, ± 5%
R361		**ERD25FJ103**	Carbon, 10kΩ, 1/4W, ± 5%
R362		**ERD25FJ471**	Carbon, 470Ω, 1/4W, ± 5%
R364		**ERD25FJ681**	Carbon, 680Ω, 1/4W, ± 5%
R365		**ERD25FJ272**	Carbon, 2.7kΩ, 1/4W, ± 5%
R401, 402		**ERD25FJ471**	Carbon, 470Ω, 1/4W, ± 5%
CAPACITORS			
C1, 2		ECKD1H223PF	Ceramic, 0.022μF, 50V, $^{+100}_{-0}$%
C3		**ECEB1VS102**	Electrolytic, 1000μF, 35V
C4 [EG],[EB],[EF],[XA]	⚠	ECQE2A473MZ	Polyester, 0.047μF, 250V, ± 20%
C4 [XL],[E],[EK]	⚠	ECNC4A473MD	Ceramic, 0.047μF, 450V, ± 20%

Ref. No.		Part No.	Part Name & Description
C5, 6		ECQM1H104KZ	Polyester, 0.1μF, 50V, ± 10%
C101, 102		ECQM1H104KZ	Polyester, 0.1μF, 50V, ± 10%
C103		ECQM1H104KZ	Polyester, 0.1μF, 50V, ± 10%
C104, 105		**ECEA1CS330**	Electrolytic, 33μF, 16V
C106		**ECEA1ES470**	Electrolytic, 47μF, 25V
C107		**ECEA50Z3R3**	Electrolytic, 3.3μF, 50V
C108		**ECEA1ES101**	Electrolytic, 100μF, 25V
C109		**ECEA1ES101**	Electrolytic, 100μF, 25V
C201		**ECEA1CS330**	Electrolytic, 33μF, 16V
C202, 203		**ECEA50Z1**	Electrolytic, 1μF, 50V
C204		ECQM1H473KZ	Polyester, 0.047μF, 50V, ± 10%
C205		**ECEA50Z1**	Electrolytic, 1μF, 50V
C206		**ECEA1AS221**	Electrolytic, 220μF, 10V
C207		**ECEA1ES470**	Electrolytic, 47μF, 25V
C208		**ECEA50Z1**	Electrolytic, 1μF, 50V
C209		ECQV05224JZ	Polyester, 0.22μF, 50V, ± 5%
C210		**ECEA25Z4R7**	Electrolytic, 4.7μF, 25V
C211		ECQV05224JZ	Polyester, 0.22μF, 50V, ± 5%
C212		**ECEA1ES101**	Electrolytic, 100μF, 25V
C213		**ECEA1ES470**	Electrolytic, 47μF, 25V
C214		ECKF1E104ZV	Ceramic, 0.1μF, 25V, $^{+80}_{-20}$%
C215		ECCD1H471K	Ceramic, 470pF, 50V, ± 10%
C216		ECCD1H151K	Ceramic, 150pF, 50V, ± 10%
C217		ECCD1H330K	Ceramic, 33pF, 50V, ± 10%
C218		ECKF1E104ZV	Ceramic, 0.1μF, 25V, $^{+80}_{-20}$%
C219		**ECEA1ES101**	Electrolytic, 100μF, 25V
C301		**ECEA1ES101**	Electrolytic, 100μF, 25V
C302		ECQM1H473KZ	Polyester, 0.047μF, 50V, ± 10%
C303		ECQM1H104KZ	Polyester, 0.1μF, 50V, ± 10%
C304		**ECEA0JS471**	Electrolytic, 470μF, 6.3V
C305		**ECEA1CS330**	Electrolytic, 33μF, 16V
C306		ECCD1H101K	Ceramic, 100pF, 50V, ± 10%
C307		ECQM1H102KZ	Polyester, 0.001μF, 50V, ± 10%
C308		**ECEA1CS330**	Electrolytic, 33μF, 16V
C309		ECQM1H104KZ	Polyester, 0.1μF, 50V, ± 10%
C310, 311		ECQM1H103KZ	Polyester, 0.01μF, 50V, ± 10%
C312		**ECEA50Z1**	Electrolytic, 1μF, 50V
C313		**ECEA1ES220**	Electrolytic, 22μF, 25V
C314		**ECEA1AS101**	Electrolytic, 100μF, 10V
C315, 316		ECKD1H102KB	Ceramic, 0.001μF, 50V, ± 10%

Areas

* [E] is available in Scandinavia.
* [EK] is available in United Kingdom.
* [XL] is available in Australia.
* [EB] is available in Belgium.
* [EG] is available in European.
* [EF] is available in France.
* [XA] is available in Asia, Latin America, Middle East and Africa.

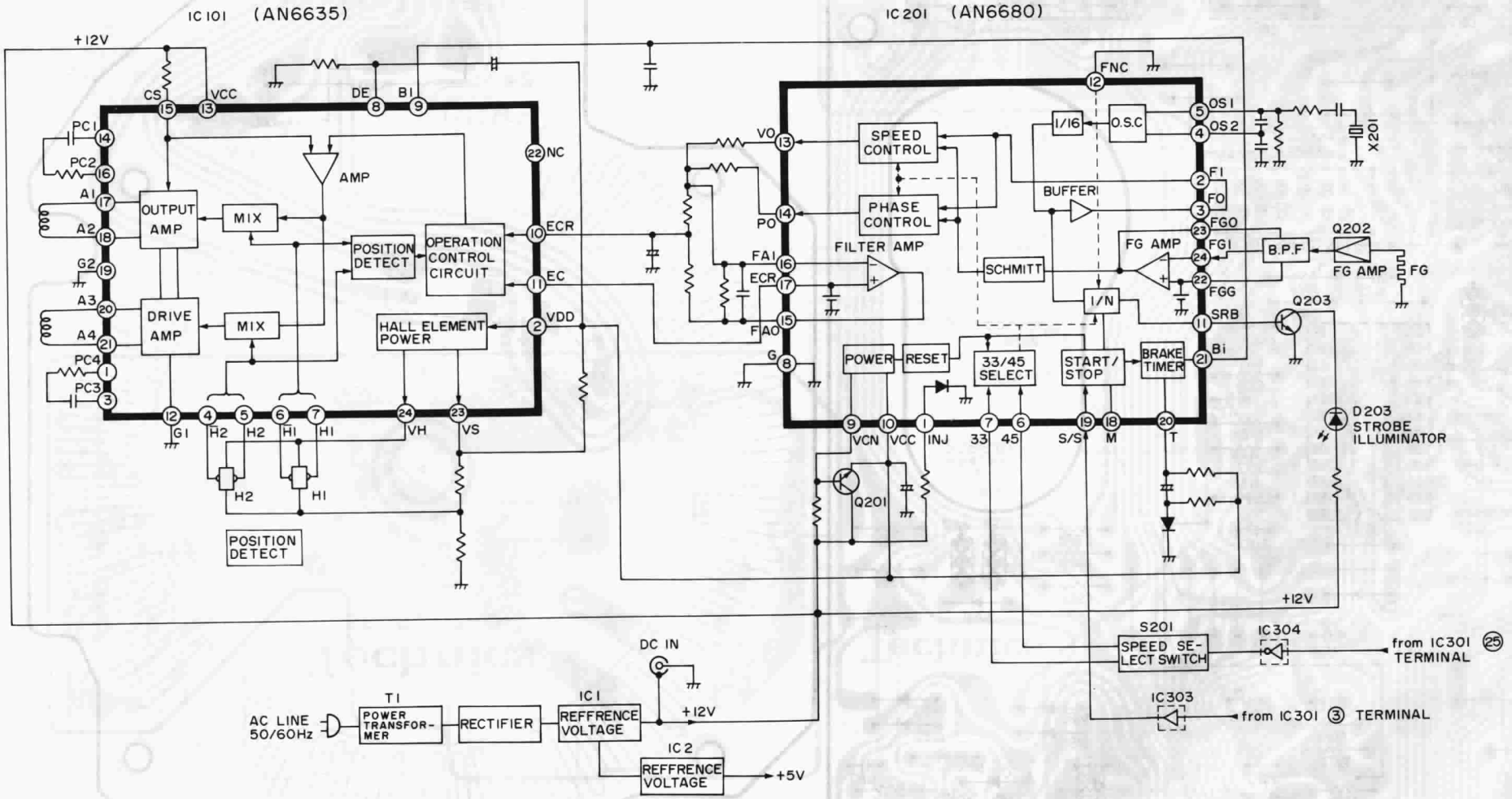
IC 101 (AN6635)
IC 201 (AN6680)
+12V
CS
VCC
DE
BI
PC1
PC2
A1
A2
G2
A3
A4
PC4
PC3
OUTPUT AMP
DRIVE AMP
MIX
MIX
AMP
POSITION DETECT
OPERATION CONTROL CIRCUIT
HALL ELEMENT POWER
NC
ECR
EC
VDD
G1
H2
H2
HI
HI
VH
VS
H2
HI
POSITION DETECT
FNC
OSC
1/16
OS1
OS2
X201
SPEED CONTROL
PHASE CONTROL
VO
PO
FAI
ECR
FAO
G
FILTER AMP
BUFFER
FI
FO
FGO
FGI
FGG
SRB
Bi
B.P.F
Q202
FG AMP
FG
SCHMITT
FG AMP
1/N
Q203
POWER
RESET
33/45 SELECT
START/ STOP
BRAKE TIMER
D203 STROBE ILLUMINATOR
VCN
VCC
INJ
33
45
S/S
M
T
Q201
+12V
S201
SPEED SELECT SWITCH
IC304
from IC301 (25) TERMINAL
IC303
from IC301 (3) TERMINAL
DC IN
T1
POWER TRANSFORMER
AC LINE 50/60Hz
RECTIFIER
IC1
REFFRENCE VOLTAGE
+12V
IC2
REFFRENCE VOLTAGE
+5V

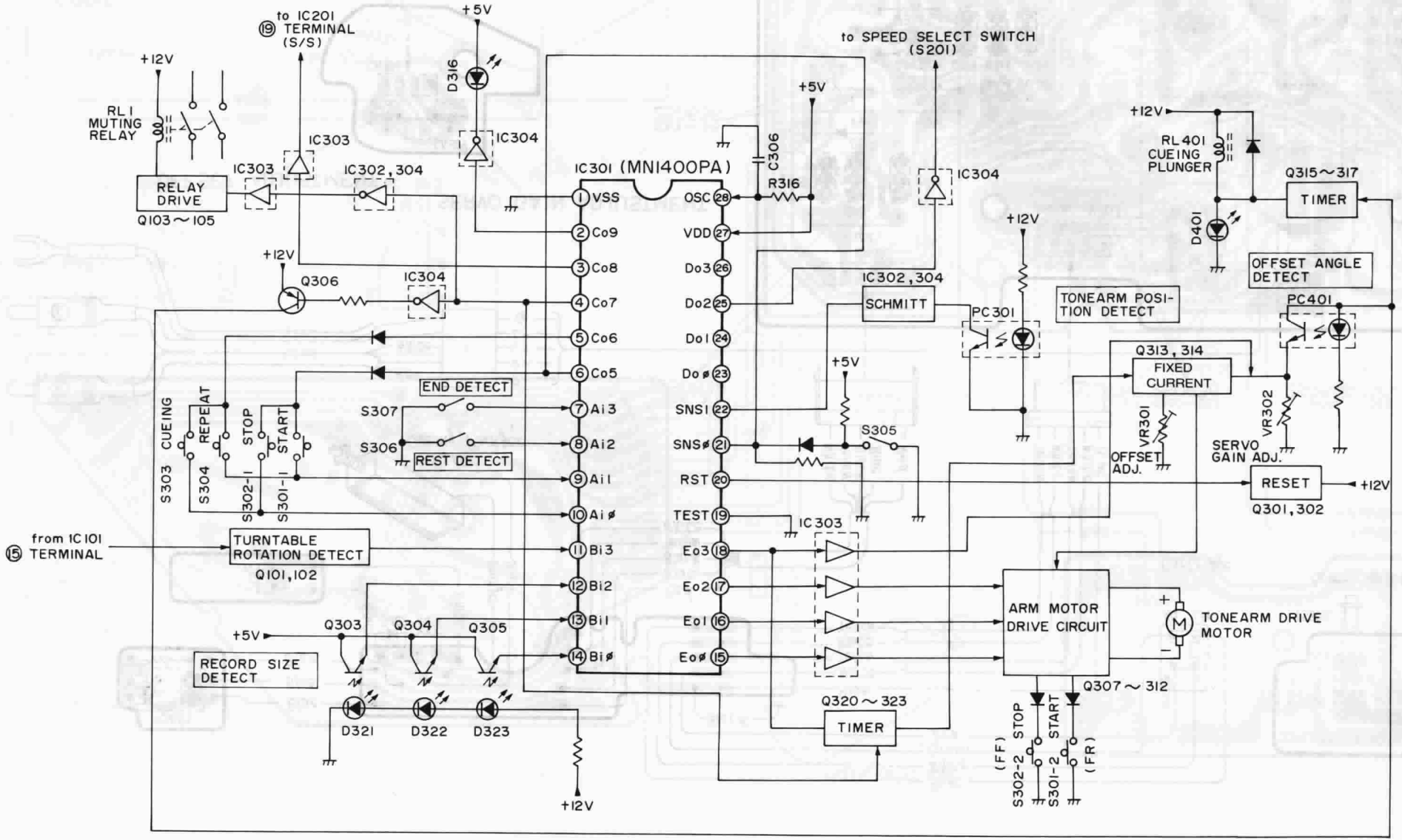
to IC201 ⑲ TERMINAL (S/S)
+12V
RL1 MUTING RELAY
RELAY DRIVE
Q103～105
IC303
IC303
IC302,304
+5V
D316
IC304
IC301 (MN1400PA)
C306
R316
VSS
Co9
Co8
Co7
Co6
Co5
Ai3
Ai2
Ai1
Ai ø
Bi3
Bi2
Bi1
Bi ø
OSC
VDD
Do3
Do2
Do1
Do ø
SNS1
SNS ø
RST
TEST
Eo3
Eo2
Eo1
Eo ø
to SPEED SELECT SWITCH (S201)
IC304
+5V
+12V
Q306
IC304
IC302,304
SCHMITT
PC301
+12V
RL401 CUEING PLUNGER
Q315～317
TIMER
D401
OFFSET ANGLE DETECT
TONEARM POSITION DETECT
PC401
Q313, 314
FIXED CURRENT
VR301
OFFSET ADJ.
VR302
SERVO GAIN ADJ.
RESET
Q301, 302
+12V
S303 CUEING
REPEAT
S304
STOP
S302-1
START
S301-1
END DETECT
S307
S306
REST DETECT
+5V
S305
from IC101 ⑮ TERMINAL
TURNTABLE ROTATION DETECT
Q101, 102
IC303
ARM MOTOR DRIVE CIRCUIT
TONEARM DRIVE MOTOR
+5V
RECORD SIZE DETECT
Q303
Q304
Q305
D321
D322
D323
+12V
Q320～323
TIMER
Q307～312
(FF)
S302-2 STOP
S301-2 START
(FR)

EXPLODED VIEWS...Cabinet and Chassis

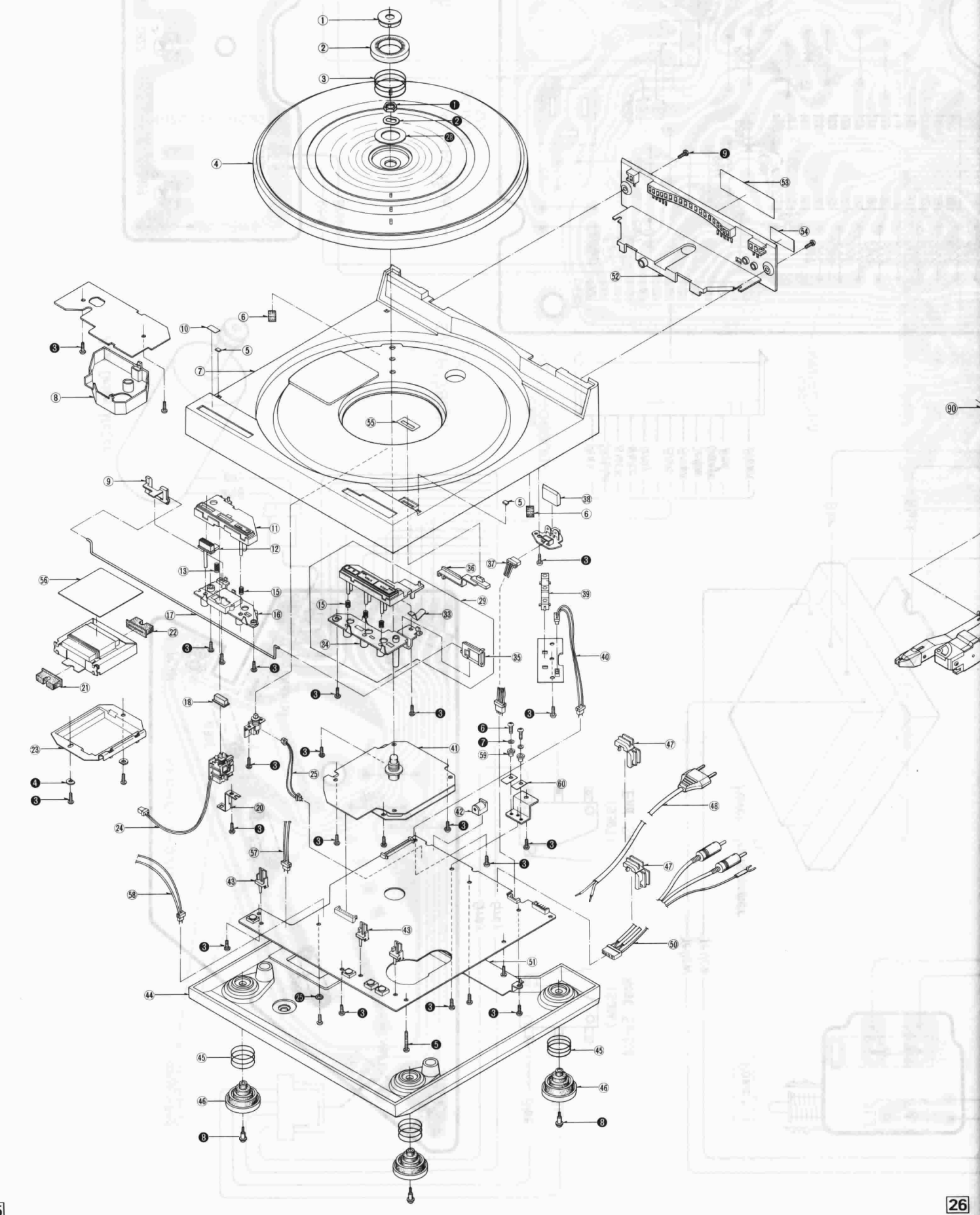

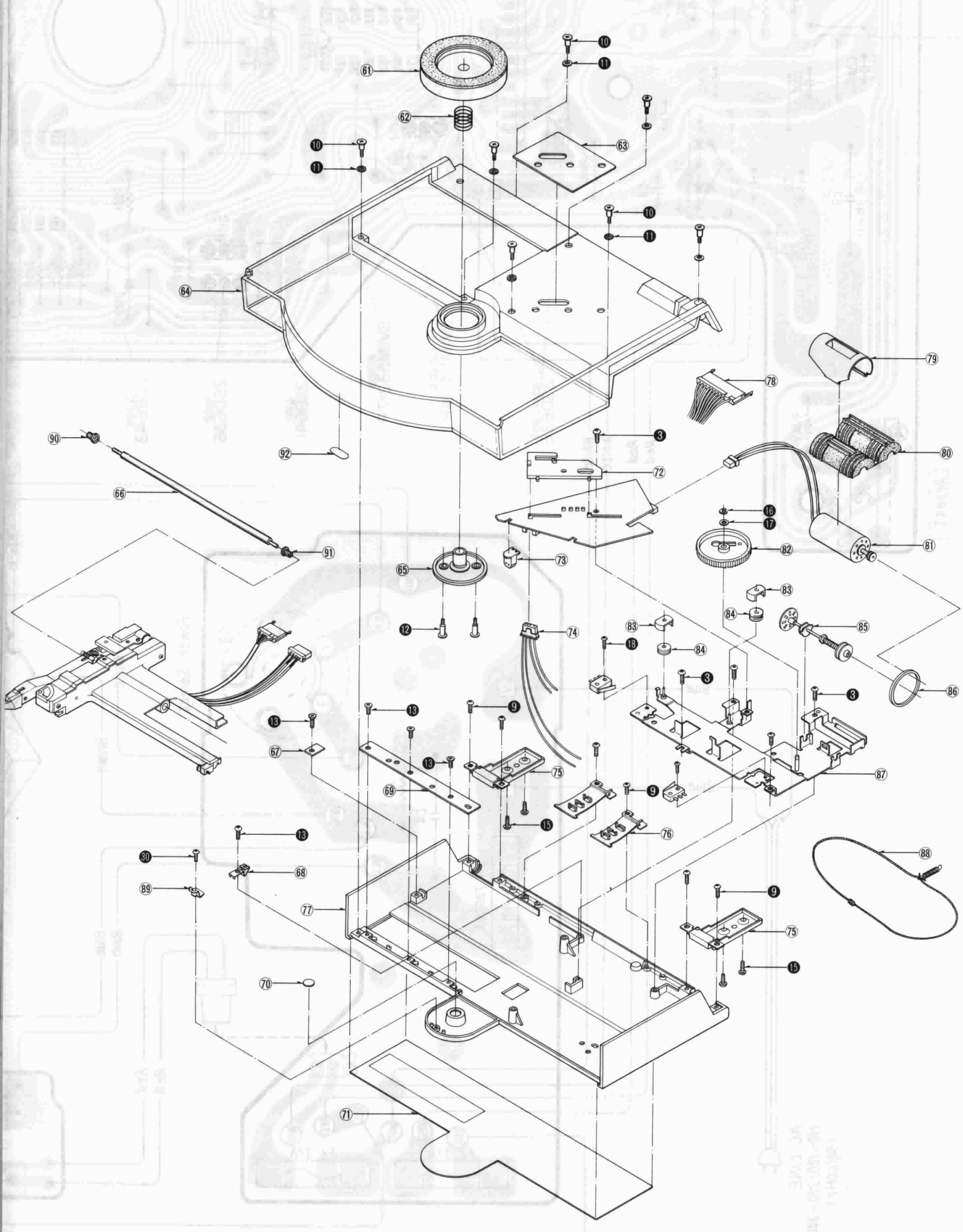
61
10
11
62
63
10
11
64
10
11
79
78
90
3
92
72
80
66
16
17
82
81
91
65
73
83
84
85
12
74
83
18
84
3
3
86
13
9
13
67
13
75
87
69
9
15
76
13
30
68
88
89
77
9
75
15
70
71

■ REPLACEMENT PARTS LIST...Cabinet & Chassis Parts

Notes:
1. Part numbers are indicated on most mechanical parts. Please use this part number for parts orders.
2. △ indicates that only parts specified by the manufacturer be used for safety.
3. ⓚ-marked parts are used for black type only, while O-marked parts are for silver type only.
4. Parts other than ⓚ and O-marked are used for both black and silver types.
5. Bracketed indications in Ref. No. columns specify the area. Parts without these indications can be used for all areas.

Black type model No : SL-7 (K)

Ref. No.		Part No.	Part Name & Description
CABINET and CHASSIS PARTS			
1		SFUMC10–02	Supporter, 45 Adaptor
2		SFUMC10–01	45 Adaptor
3		SFQAC10–01	Spring, 45 Adaptor
4		SFTEC07–01A	Turntable
5		SFGCC07–02	Cushion, Dust Cover
6		SFGZC07–01	Spacer
7	O	SFACC07–01	Cabinet
7	ⓚ	SFACC07–21	Cabinet (Black)
8		SFUMC07X01	Cover, Power P.C.B.
9		SFUMC07–06	Guide (L), Lock Rod
10		SFNZC07–04	Label, Open
11		SFUMC07–17R	Guide, Power Switch
12		SFUMC07–04	Knob, Lock
13		SFQAC07–01	Spring, Lock
15		SFQAC07–02	Spring
16		SFUMC07–18	Guide (B), Power Switch
17		SFQSC07–01	Rod, Lock
18		SFKTC07–05	Knob, Power
20		SFUPC07–05	Bracket, Power Switch
21		SFGCC07–03	Cushion (A), Power Transformer
22		SFGCC07–06	Cushion (B), Power Transformer
23		SFUMC07–07	Cover, Power Transformer
24		SFDLC07–03E	Connector, 2 pin (with Wire)
25		SFDJC07–06E	Connector, 2 pin (with Wire)
29		SFUMC07–14A	Guide Ass'y, Operation
33		SFQPC07–01	Spacer, Lock Guide
34		SFUMC07–15	Guide (B), Operation
35		SFUMC07–05	Guide (R), Lock Rod
36		SFKTC07–06	Knob, Speed Select
37		SFDJC07–04E	Connector, 4 Pin (with Wire)
38		SFUMC07–21	Cover, VR301 & 302
39		SFUMC10–48	Spacer, Record Size L.E.D.
40		SFDJC07–05E	Connector, 2 Pin (with Wire)
41		SFMZC07–01Z	Stator Frame Ass'y
42		SFDJHEC0470	DC Terminal
43		SFUMC07–13	Spacer, L.E.D.
44		SFAUC07–01	Bottom Board
45		SFQCC07–01	Spring, Audio Insulator
46		SFGAC07–01E	Audio Insulator
47		SFUM190–11	Clamper, AC Cord
48	△	**SJA88**	AC Cord
48 [EK] only	△	**QFC1205M**	AC Cord
48 [XL] only	△	**QFC1208M**	AC Cord
50		SFDHC07–01A	Phono Cord
51		SFUPC07–05	Plate, Shield
52		SFUMC07–03	Cover, Rear
53 [E] only		SFNNC07S01	Name Plate
53 [EK], [XL]		SFNNC07G01	Name Plate
53 [EG] only		SFNNC07N01	Name Plate
53 [EB], [EF]		SFNNC07J01	Name Plate
53 [XA] only		SFNNC07X01	Name Plate
54		SFNZC07–03	Lable, Adjustment
55	O	SFNZC07–01	Lable, Speed Select
55	ⓚ	SFNZC07–21	Lable, Speed Select (Black)
56		SFUPC07–10	Plate, Power Transformer
57		SFDLC07–02E	Connector, 2 Pin (with Wire)
58		SFDLC07–01E	Connector, 2 Pin (with Wire)
59		SFDBC07–01	Spacer, IC1 & IC2
60		SFDCC07–01	Spacer, IC1 & IC2
61		SFKDC07–01E	Supporter, Record
62		SFQAC07–03	Spring
63		SFNZC07M01	Lable, Record Size Select
64		SFADC07–01R	Dust Cover
65		SFUMC10–08E	Supporter, Record
66		SFXJC07–01	Guide Rail (A)
67		SFUPC07–04	Supporter
68		SFUPC07–07	Clamper, Wire
69		SFUPC07–03	Guide Rail (B)
70		SFXWC10–03	Spacer
71		SFKKC07–01	Panel
72		SFUMC07–16	Shutter
73		SFUMC10–48	Spacer, L.E.D. (Strobe)
74		SFDJC10–02E	Connector, 4 pin (with Wire)
75	O	SFATC07–01A	Hinge
75	ⓚ	SFATC07–21A	Hinge (Black)
76		SFUMC07–19	Guide, Wire
77	O	SFACC07–02	Cabinet, Lid
77	ⓚ	SFACC07–22	Cabinet, Lid (Black)
78		SFDJC07–01E	Connector, 12 pin
79		SFUPC07–02	Cover, Motor
80		SFGCC07–01	Cushion, Motor
81		SFMHC10–01E	Motor Ass'y
82		SFUMC10–05	Drum, Arm Drive
83		SFUMC07–22	Stopper
84		RDR20–3	Pulley
85		SFXZC07–01R	Worm Ass'y
86		SFGBC10–01	Belt
87		SFUPC07–01E	Plate, Arm Drive
88		SFUZC07–05E	Lope
89		SFUPC07–08	Bracket, Dust Cover
90		SFGCC07–05	Cushion (B), Guide Rail (A)
91		SFGCC07–04	Cushion (A), Guide Rail (A)
92		SFNZC07–06	Lable, Push
TONEARM PARTS			
101		SFPAM00701A	Tonearm Ass'y
102		EPCP202CBK	Cartridge
		EPS202ED	Stylus
103		SFPCS00701A	Pointer Ass'y
104		SFPKD00701E	Arm Base
105		SFDZC07–01E	Plunger Ass'y (PL401)
106		SFPJL0C701A	Lift Ass'y
107		SFPSP00704	Spring, Lift
108		SFPKD00702	Cover, Arm Base
109		SFPSP00706	Spring
110		SFDJC07–03E	Connector, Phono (with Wire)
111		SFDJC07–02E	Connector, 5 pin (with Wire)
112		SFPZB00702	Bracket
SCREWS, WASHERS and CIRCLIPS			
❶		**XNS12**	Nut
❷		SFXWC10–01	Washer
❸		**XTV3+8BFN**	Screw
❹		**XWT3**	Washer
❺		**XTN3+35B**	Screw
❻		**XSN3+6S**	Screw
❼		**XWA3B**	Washer
❽		SFXGQ20–01	Screw
❾		**XTN3+8BFZ**	Screw
❿		SFXGC07–01	Screw
⓫		SFXWC07–01	Washer
⓬		SFXGC10–02	Screw
⓭		XTS26+6JFZ	Screw

SPECIFICATIONS

Les spécifications sont susceptibles d'être modifiées sans préavis.
Le poids et les dimensions donnés sont approximatifs.

■ Généralités

Alimentation:	Alternatif 110-120/220-240V, 50/60 Hz 12V C.C. (Equipée d'un jack d'entrée C.C.)
Consommation:	20 W (C.A.) 6 W (C.C.)
Dimensions: (L x H x P)	31.5 x 8.8 x 31.5 cm
Poids:	7 kg

■ Platine de lecture

Type:	Entraînement direct à quartz Platine automatique Départ automatique/Entrée automatique Retour automatique Arrêt automatique Audition répétée Sélecteur de vitesse automatique Sélecteur de diamètre automatique Fonctions exploratrices à 2 vitesses Détection de la préssence d'un disque
Système d'entraînement:	Entraînement direct
Moteur:	Moteur C.C. sans balai
Groupe de réglage:	Réglage d'accrochage de phase par quartz
Plateau de lecture:	Aluminium moulé sous pression Diamètre 30 cm
Vitesses de rotation:	33-1/3 et 45 t/p.m. Sélecteur de vitesse automatique (Sélection manuelle possible)
Déviation de la vitesse:	En deçà de ± 0.002%
Pleurage et scintillement:	0.012% de valeur efficace* 0.025% de valeur efficace (JIS C5521) ± 0.035% de crête (IEC 98A Pondéré)

* Mesuré par l'obtention d'un signal provenant du générateur de fréquences incorporé de l'ensemble du moteur.

Ronflement:	–56 dB (IEC 98A Non pondéré) –78 dB (IEC 98A Pondéré)

■ Bras de lecture

Type:	Bras de lecture d'alignement linéaire de type à équilibre dynamique avec suspension à la cardan à 4 pivots
Longueur effective:	105 mm
Angle d'erreur de piste:	En deçà de ± 0.1°
Masse réelle:	9 g (y compris la cellule pick-up)
Fréquence de résonance:	12 Hz
Moteur d'entraînement du bras de lecture:	Moteur sans noyau C.C.

■ Cellule pick-up

Type:	Cellule pick-up stéréo à aimant mobile Système de suspension ponctuelle
Aimant:	Samarium-Cobalt (SM-Co)
Porte-à-faux:	Tube à bore pur
Circuit magnétique:	Noyau entièrement feuilleté
Réponse en fréquence:	10 Hz à 50 kHz 20 Hz à 35 kHz ± 3 dB 20 Hz à 10 kHz ± 1 dB
Tension de sortie:	2.5 mV à 1 kHz; 5 cm/s. zéro à vitesse latérale de crête (7 mV à 1 kHz; 10 cm/s., zéro à vitesse 45° de crête [DIN 45 500])
Séparation de canal:	Plus de 22 à 1 kHz
Equilibrage des canaux:	En deçcà de 1.8 dB à 1 kHz
Impédance de charge recommandée:	47kΩ ～100kΩ
Elasticité (dynamique):	12×10^{-6} cm/dyne à 100 Hz
Angle d'alignement vertical	20°
Plage de la force verticale:	1.25 ± 0.25 gramme (12.5 ± 2.5mN)
Extrémité de la pointe de lecture:	0.3 x 0.7 mil (7.5 x 18μm) Forme elliptique
Poids:	6.0 grammes (cellule seule)
Remplacement de la pointe de lecture	EPS-202ED

■ CONTENTS

	Page
LOCATION OF CONTROLS	4, 5
FEATURES	6
DISASSEMBLY INSTRUCTIONS	7 ～ 10
DESCRIPTION OF CONNECTOR	11
REPLACEMENT OF HALL ELEMENT	11
ADJUSTMENT (ENGLISH)	12 ～ 14
JUSTIERUNG (DEUTSCH)	15, 16
REGLAGES (FRANÇAIS)	17, 18
REPLACEMENT PARTS LIST	19, 20, 29, 30
BLOCK DIAGRAM	21, 22
PRINTED CIRCUIT BOARD WIRING VIEW	23, 24
EXPLODED VIEWS	25, 26, 30
SCHEMATIC DIAGRAM	27, 28
BLOCK DIAGRAM OF IC'S	31
CHANGES	31, 32

Ref. No.		Part No.	Part Name & Description
⑮		**XTB3+6BFN**	Screw
⑯		**XUC3FT**	Circlip
⑰		SFXW551D2	Washer
⑱		XYN23+C10BN	Screw
⑲		SFPEV00701	Screw
⑳		**XTN3+4B**	Screw
㉑		**XTN23+6BFZ**	Screw
㉒		**XSN2+4BV**	Screw
㉓		**XWA2BFZ**	Washer
㉔		SFPTN00702	Screw
㉕		**XWC3B**	Washer
㉖		**XSN3+8S**	Screw
㉗		XXE3D6FZ	Screw
㉘		SFPSP00706	Screw
㉙		SFXWC10–05	Washer
㉚		**XTN3+6BFZ**	Screw
ACCESSORIES			
A1 [E] only		SFNUC07S01	Instruction Book
A1 [EK] only		SFNUC07G01	Instruction Book
A1 [EG], [EF], [EB], [XL], [XA]		SFNUC07X01	Instruction Book

Ref. No.		Part No.	Part Name & Description
A2		SFCZB30001	Brush
A3		SFWTC07–01	Screw Driver
A4 [XA] only		SFDKI19118	2P Plug
PACKING PARTS			
P1 [EF] only	○	SFHPC07C01	Carton
P1	○	SFHPC07M01	Carton
P1	Ⓚ	SFHPC07M21	Carton (Black)
P2		SFHHC07–01	Pad (L)
P3		SFHHC07–02	Pad (R)
P4		SFHSC07–02	Spacer (A), Corner
P5		SFHSC07–03	Spacer (B), Corner
P6		SFHSC07–01	Spacer, Tonearm
P7		SFHSC10–01	Spacer, Turntable
P8		XSN4D20FYBS	Screw
P9		SFHZC07–01	Cover
P10		SFYH45X60	Polyethylene Bag, Unit
P11		SPP189	Polyethylene Bag, Cord
P12		SPB1083	Polyethylene Bag, Accessory

■ EXPLODED VIEWS... Tonearm

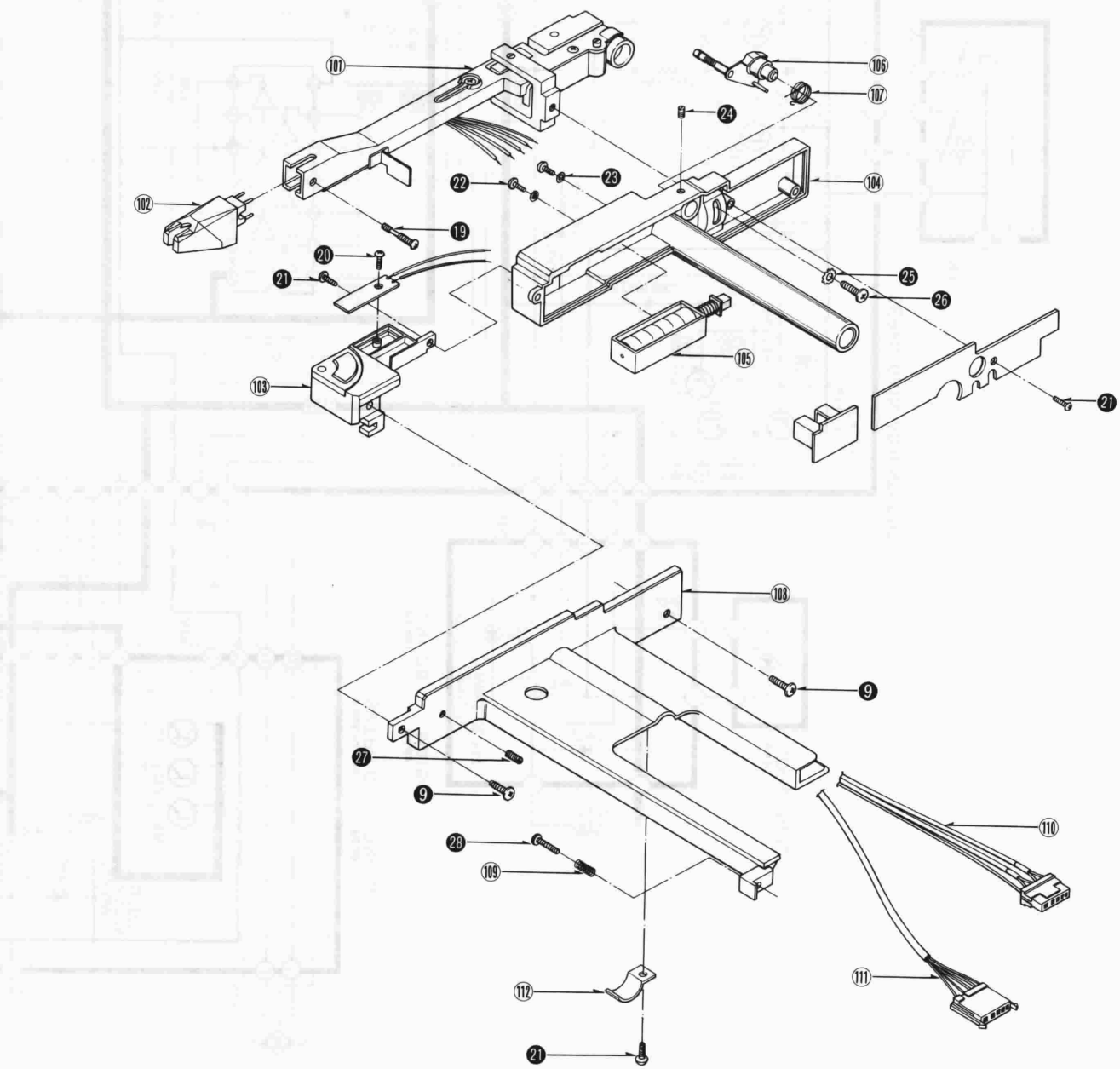

■ BLOCK DIAGRAM OF IC'S

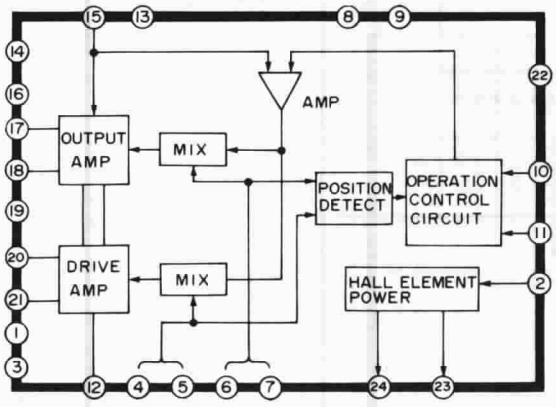

IC101 (AN6635)

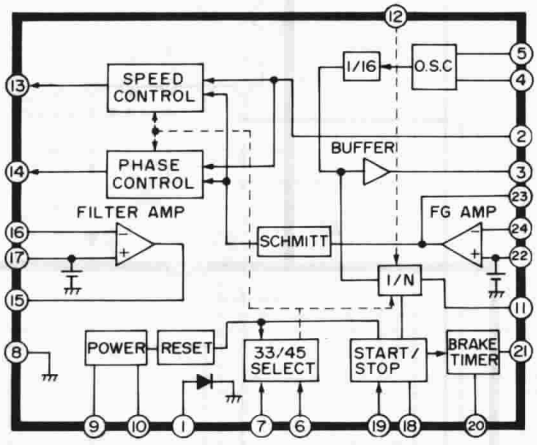

IC201 (AN6680)

CHANGES

Notes:

1. This change of parts list includes the parts changed from those mentioned in SL-7/K Service Manual (ORDER NO. SD8009-1787).
2. The new parts list (page 19, 20 and 29, 30) is mentioned in this Service Manual. Please use this new parts list when placing an order for parts of No. SL-7.
3. SL-7/K Service Manual (ORDER NO. SD8009-1787) must be disused.

■ REPLACEMENT PARTS LIST

Ref. No.		Change of Part No. OLD SL-7/K (ORDER NO. SD8009-1787)	Change of Part No. NEW SL-7 (Revise)	Parts Name & Description	Per Set (Pcs.)	Remarks
DIODES						
D401		SVDBR3432S	SVDEBR3432S	Light Emitting Diode	1	○
HALL ELEMENT						
H1, 2		H–3000A	H–300A	Hall Element	2	○
SWITCHES						
S1–1	⚠	SFDSSS5GL	SFDSSS5GLS	Switch, Power	1	○
S1–2	⚠	SFDSTW9901	SFDSTWM9901	Switch, Power	1	○
S306, 307		SFDSAH251461	SFDSAH252461	Switch, End & Rest Detect	2	○
RESISTOR						
R211		ERD25TJ683	**ERD25TJ563**	Carbon, 5.6kΩ, 1/4W, ± 5%	1	
CAPACITORS						
C6		ECKF1E104ZV	ECQM1H104KZ	Polyester, 0.1μF, 50V, ± 10%	1	
C303		ECKF1E104ZV	ECQM1H104KZ	Polyester, 0.1μF, 50V, ± 10%	1	

Ref. No.		Change of Part No. OLD SL-7/K (ORDER NO. SD8009-1787)	NEW SL-7 (Revise)	Parts Name & Description	Per Set (Pcs.)	Remarks
CABINET and CHASSIS PARTS						
10		SFKTC07–04				
11		SFUMC07–17	SFUMC07–17R	Guide Ass'y, Power Switch (Refer No. ⑪)	1	○
14		SFUMC07–12				
26		SFKTC07–03				
27		SFKTC07–01				
28		SFKTC07–02				
29		SFUMC07–14	SFUMC07–14A	Guide Ass'y, Operation (Refer No. ㉙)	1	○
30		SFUMC07–11				
31		SFUMC07–09				
32		SFUMC07–10				
41		SFMZC07–01E	SFMZC07–01Z	Stator Frame Ass'y	1	○
64		SFADC07–01	SFADC07–01R	Dust Cover	1	○
10		Addition	SFNZC07–04	Lable, Open	1	○
TONEARM PART						
112		Addition	SFPZB00702	Bracket	1	○
SCREWS						
①		XSN12	**XNS12**	Nut	1	WDD
⑭		XTN3+10BFZ	Deletion		0	
⑮		XTB3+8BFN	**XTB3+6BFN**	Screw	4	WDD
㉗		XXE3D6FZS	XXE3D6FZ	Screw	1	

■ EXPLODED VIEWS

•Old

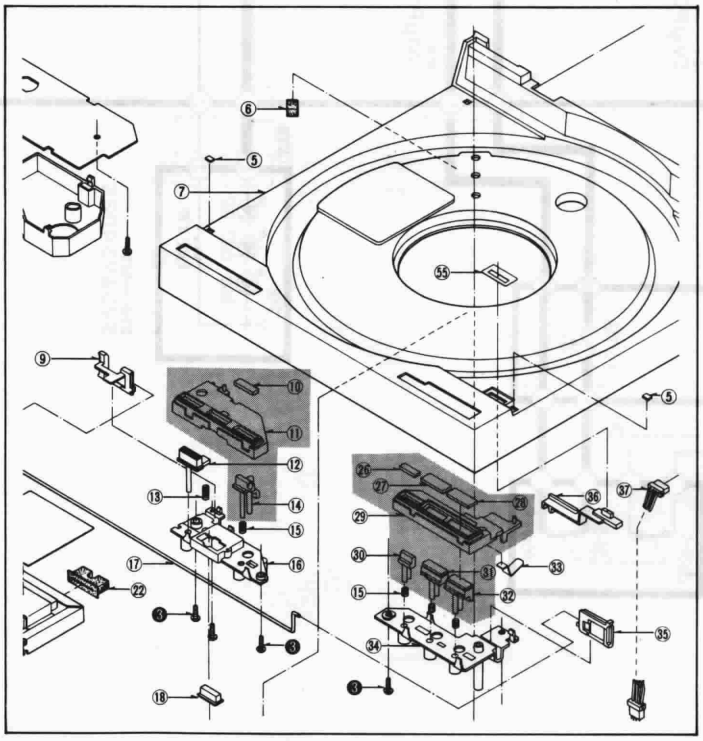

•New

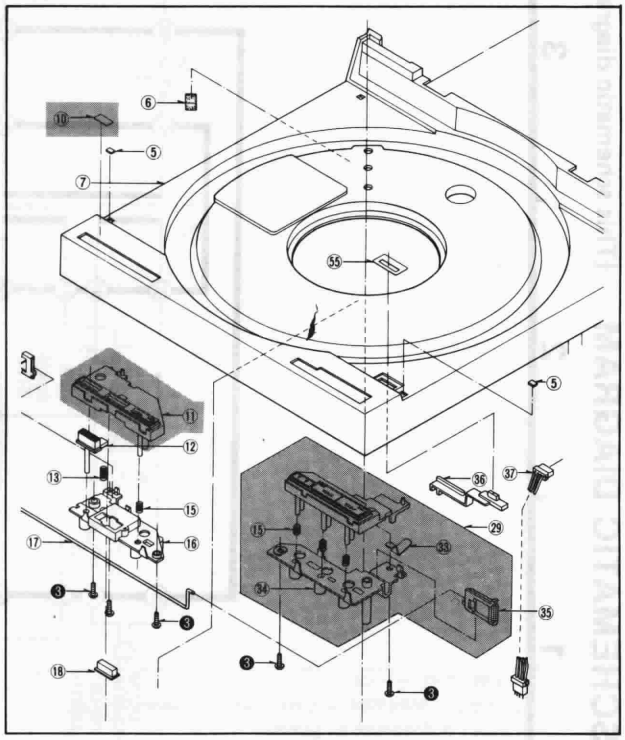

The part of shading areas are changed parts.

■ LOCATION OF CONTROLS

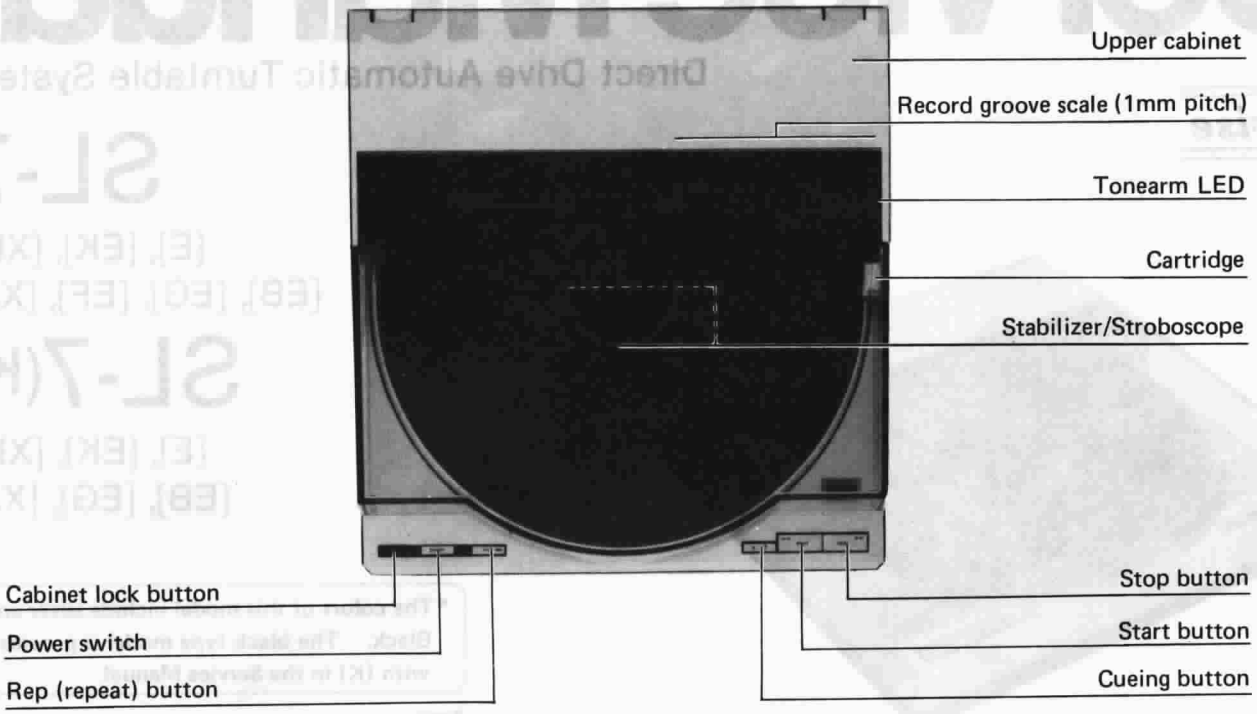

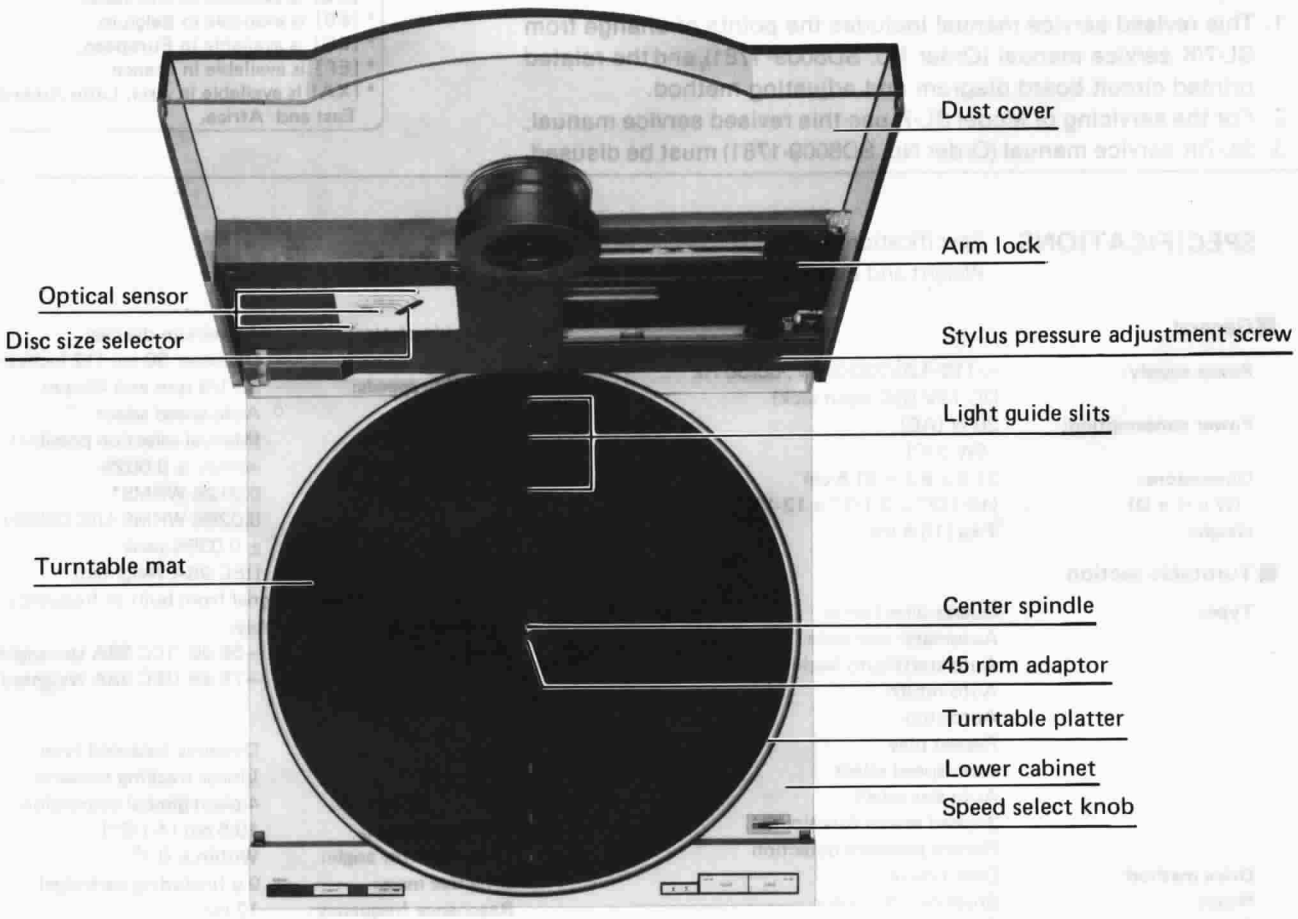

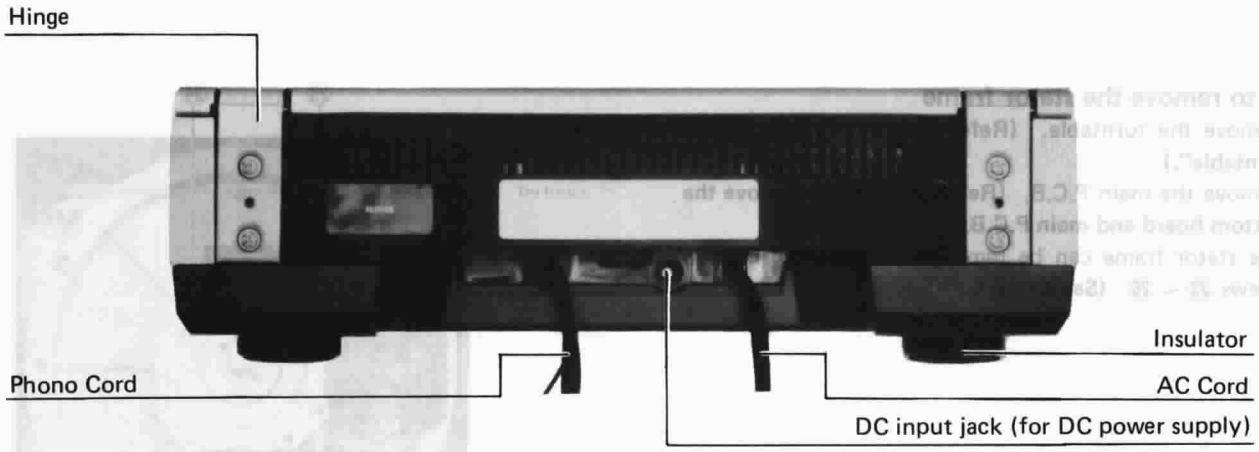
Hinge
Insulator
Phono Cord
AC Cord
DC input jack (for DC power supply)

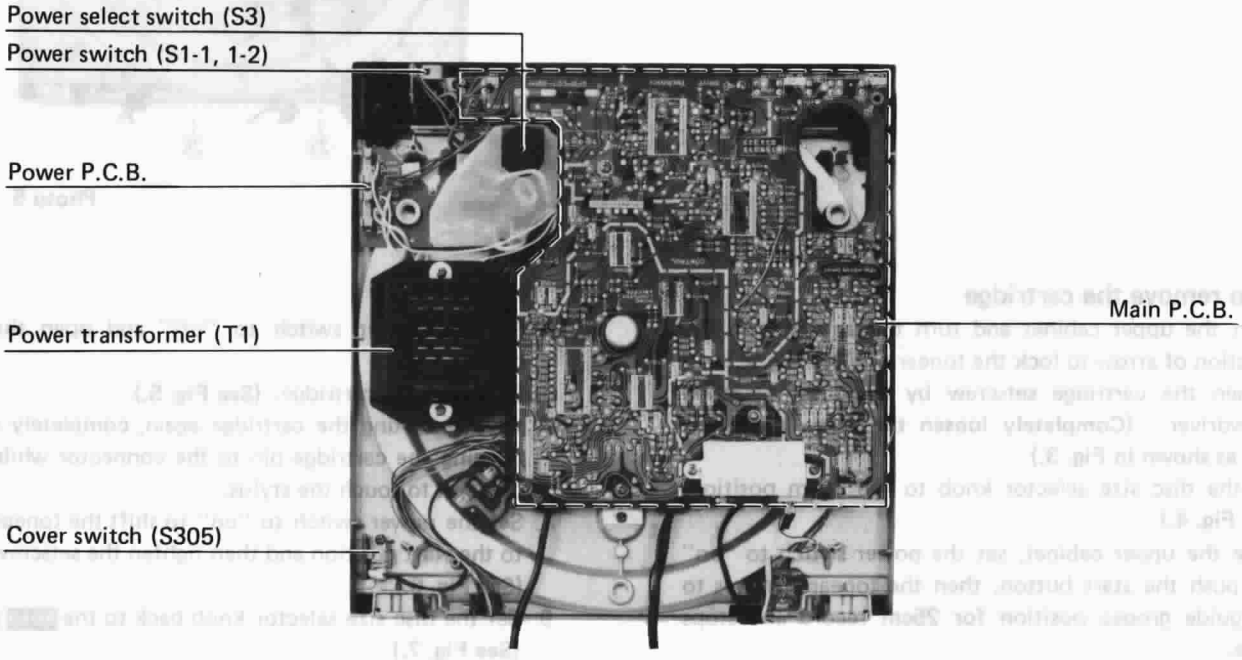
Power select switch (S3)
Power switch (S1-1, 1-2)
Power P.C.B.
Main P.C.B.
Power transformer (T1)
Cover switch (S305)

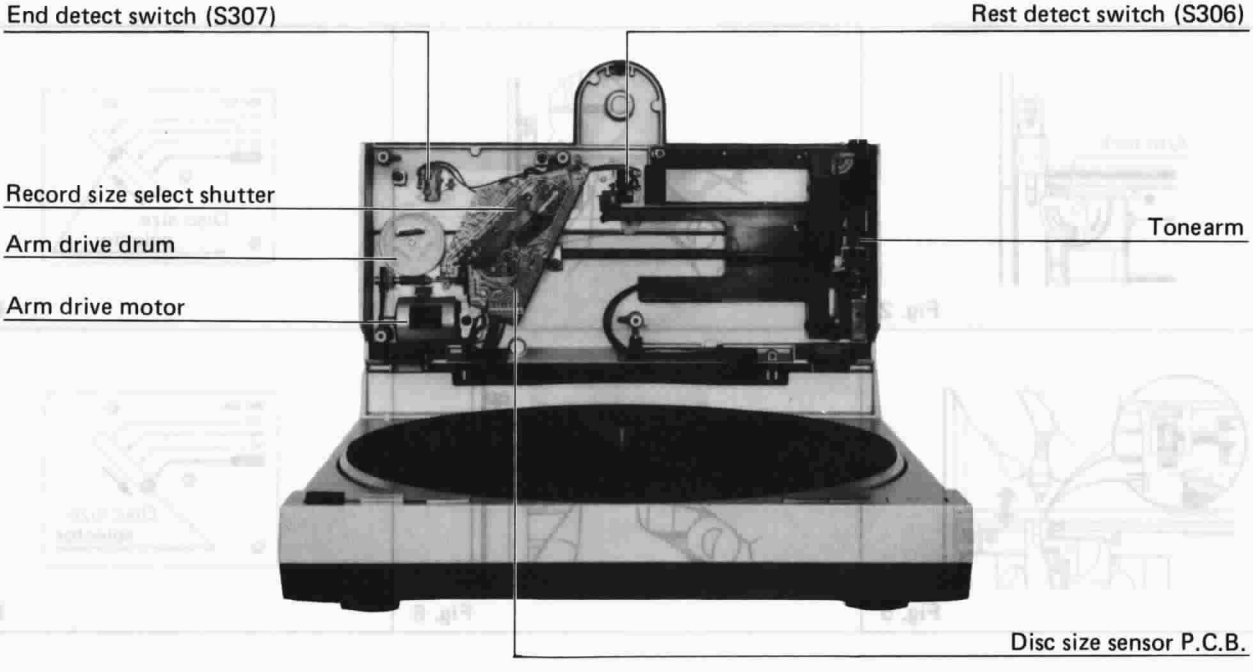
End detect switch (S307)
Rest detect switch (S306)
Record size select shutter
Tonearm
Arm drive drum
Arm drive motor
Disc size sensor P.C.B.

■ FEATURES

1. High performance direct drive unit the size of a record jacket

The SL-7 consists of an upper and lower cabinet. The upper cabinet is made of precision aluminum diecast to assure a high degree of accuracy and includes the linear tracking tonearm, tracking control circuitry and optical sensor.

The lower cabinet, made of zinc diecast to give the unit sufficient mass, holds Technics' original integral rotor/platter direct drive motor and its control circuitry. It's hard to believe that it all fits in a unit the size of a record jacket.

2. Just put on a record and press the start button.

Thanks to the optical sensor and microcomputer, both record size and record speed are detected automatically so all you have to do is press the start button to begin play.

At the end of the record, the tonearm automatically rises and returns to the start position.

When there is no record on the turntable, the tonearm does not move, so there is no danger of harming the stylus accidentally.

3. Dynamic balanced linear tracking tonearm employs optical sensor and groove deflection angle detection for extremely stable and accurate tracking

The linear tracking tonearm moves across the record surface in the same way as the cutter head used to make the record in the first place. Therefore there is virtually no tracking error or skating force.

Located by the stylus is an optical sensor that detects tracking conditions by means of groove deflection angle. Based on this information, tonearm movement is controlled to maintain optimum tracking at all times.

Because the tonearm is dynamically balanced, the turntable can be played horizontally or vertically.

4. Complete multi-function control capability.

Besides the simple, basic operating procedure described above, you also have complete selective control over all tonearm and turntable functions.

5. A precision coreless DC motor is used for tonearm drive to assure quiet and accurate control.

The coreless DC motor and slide bearing of minimum friction assure extremely precise tonearm movement. A 4-point pivot bearing gimbal suspension developed by Technics reduces friction and raises sensitivity while contributing to smooth tracking ability.

6. MM cartridge with pure boron pipe cantilever and excellent physical characteristics for faithful sound reproduction

The SL-7 is equipped with the Technics developed EPC-100CMK2 cartridge with pure boron pipe cantilever, the first in the world. Boron greatly reduces the effective mass of the moving system while the one-point suspension system provides an accurately defined point of support. Technics original cartridge technology is employed throughout this cartridge to give you the rich, realistic sound you've always wanted.

7. Other advanced features:

- Technics' original integral rotor-platter structure combines motor rotor and platter for more stable preformance.
- Full cycle detection FG servo with quartz phase locked control assures unbeatable rotational accuracy.
- Dial scale and tonearm LED indicator on outside of upper cabinet make it easy to check on tonearm position.
- Record stabilizer and stroboscope built-in.
- 45 rpm single-play adaptor is located in turntable platter for pop-up convenience.
- Can be run on either AC or DC (12V) current. DC adaptor optionally available for car battery use.

■ DISASSEMBLY INSTRUCTIONS

How to remove the bottom board and main P.C.B.

1. Turn over the unit and put it on a soft cloth cushion or the like so as not to damage the cabinet or the dust cover.
2. Remove the setscrews ① ~ ④ of the insulator and bottom board. Then the bottom board can be removed. **(See photo 1.)**
3. Remove the rear cover setscrews ⑤ and ⑥ to remove the rear cover. **(See photo 2.)**
4. Remove the setscrews ⑦ ~ ⑮ and connectors ⑯ ~ ⑱ of the main P.C.B.. Then the main P.C.B. can be removed. **(See photo 3.)**
   * When installing the main P.C.B. on the unit, make sure that the connector ⑲ (CN102) is engaged with the pin of the stator from.

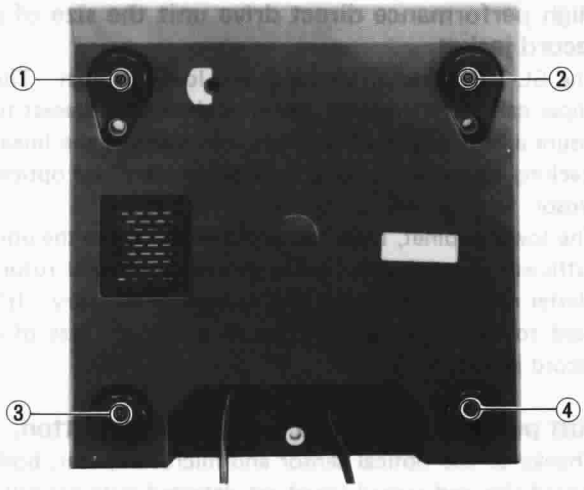

Photo 1

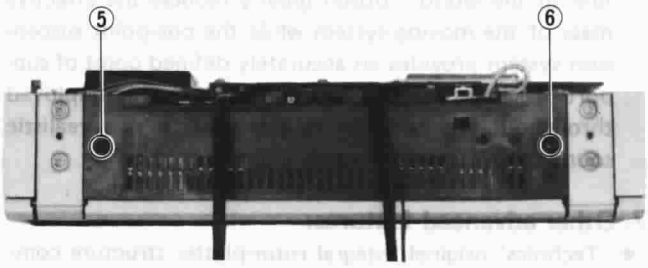

Photo 2

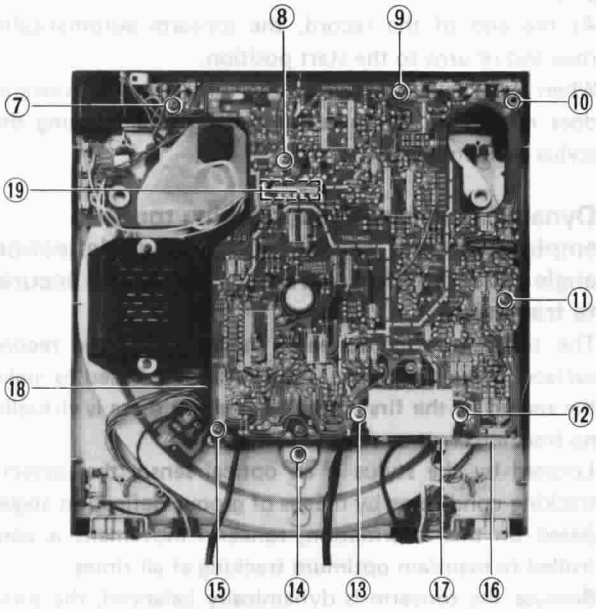

Photo 3

How to remove the turntable

1. Holding the turntable by hand, remove the adapter 45 by turning it counterclockwise. **(See photo 4.)**
2. Remove the nut ⑳ , washers ㉑ and ㉒ used to secure the turntable. **(See Fig. 1.)**
3. Set 3mm screw into the two holes provided near the center spindle of the turntable, and then lift the screws with both hands to remove the turntable. **(See Fig. 1.)**

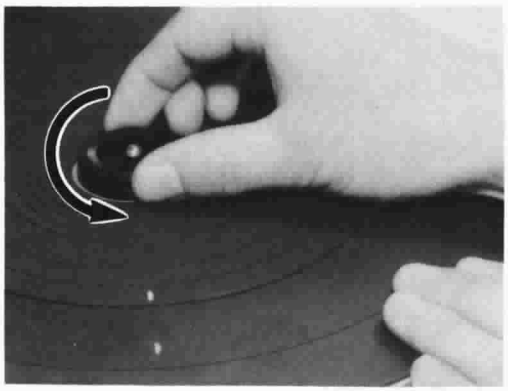

Photo 4

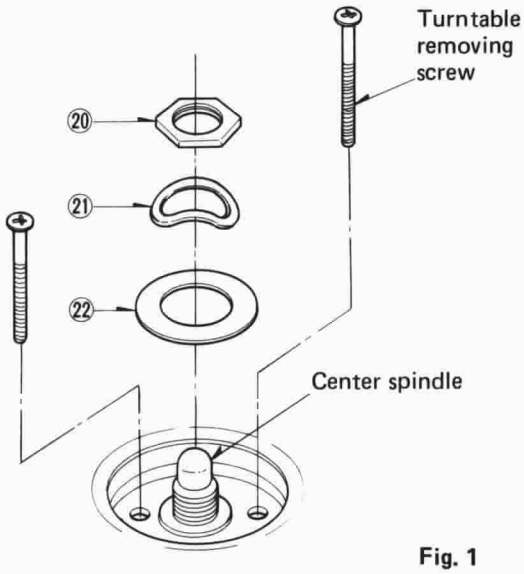

Fig. 1

How to remove the stator frame

1. Remove the turntable. **(Refer to "How to remove the turntable".)**
2. Remove the main P.C.B. **(Refer to "How to remove the bottom board and main P.C.B.")**
3. The stator frame can be removed by removing the set-screws ㉓ ~ ㉖ . **(See photo 5.)**

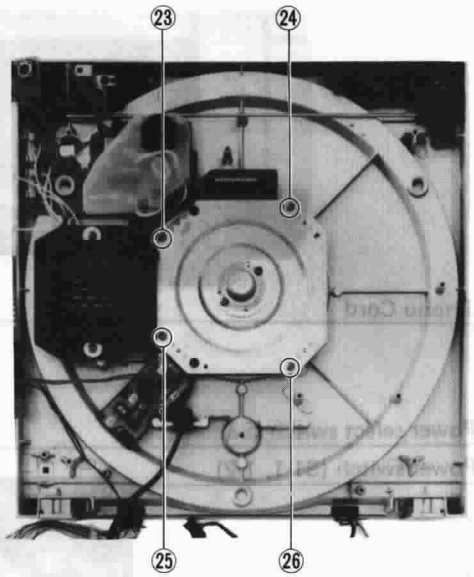

Photo 5

How to remove the cartridge

1. Open the upper cabinet and turn the arm lock in the direction of arrow to lock the tonearm. **(See Fig. 2.)**
2. Loosen the cartridge setscrew by using the attached screwdriver. **(Completely loosen the screw until it is feed as shown in Fig. 3.)**
3. Set the disc size selector knob to the 25cm position. **(See Fig. 4.)**
4. Close the upper cabinet, set the power switch to "on" and push the start button, then the tonearm moves to the guide groove position for 25cm record and stops there.
5. Set the power switch to "off" and open the upper cabinet.
6. Draw out the cartridge. **(See Fig. 5.)**
7. When inserting the cartridge again, completely insert it aligning the cartridge pin to the connector while taking care not to touch the stylus.
8. Set the power switch to "on" to shift the tonearm back to the start position and then tighten the setscrew. **(See Fig. 6.)**
9. Set the disc size selector knob back to the auto position. **(See Fig. 7.)**

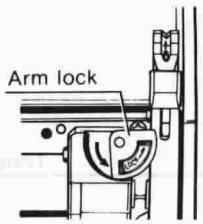

Fig. 2

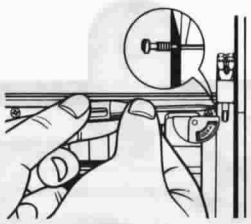

Fig. 3

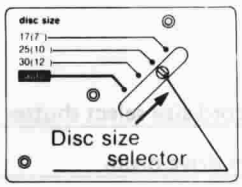

Fig. 4

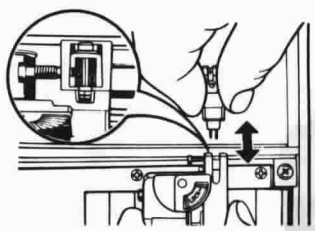

Fig. 5

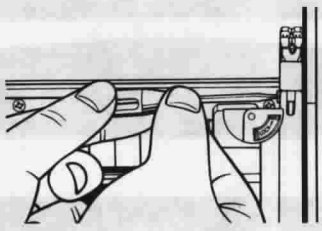

Fig. 6

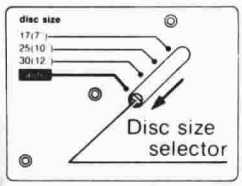

Fig. 7

How to remove the dust cover and disc size senser P.C.B.

1. Shift the tonearm inside and remove the cartridge. **(Refer to "How to remove the cartridge".)**
2. With the tonearm shifted inside, remove the dust cover setscrews ㉗ ~ ㉝ . **(Refer to photo 6.)**
3. The dust cover can be removed by pulling it toward you while lifting it in the direction of the arrow. **(See photo 6.)**
   * When removing the dust cover, be sure to lift it in the direction of the arrow because the part ㉞ is engaged with the dustcover.
4. The disc size senser P.C.B. can be removed by removing the disc size senser P.C.B. setscrew ㉟ and connector ㊱ . **(See photo 7.)**

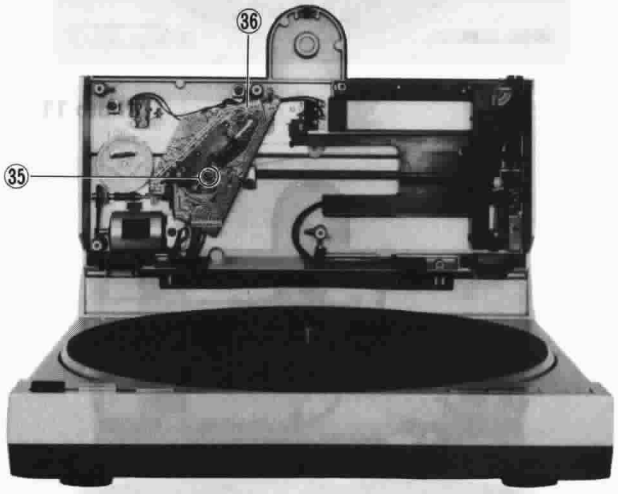

Photo 7

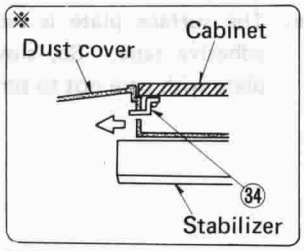

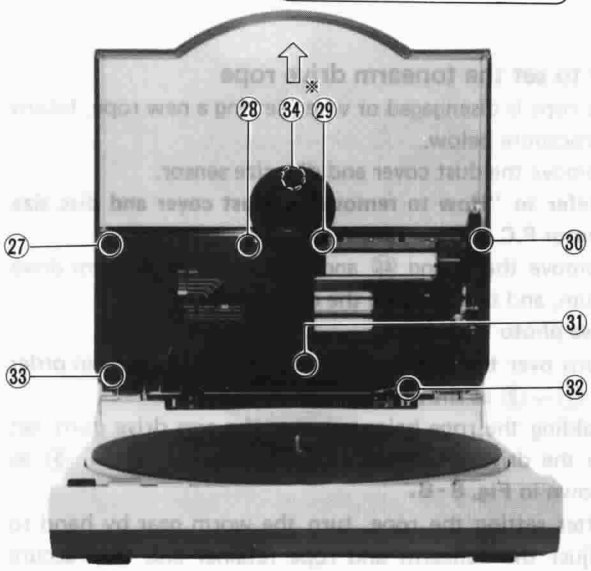

Photo 6

How to remove the tonearm

1. Remove the dust cover. **(Refer to "How to remove the dust cover".)**
2. Remove the bottom board and rear cover, and connectors ⑯ ~ ⑱. **(Refer to "How to remove the bottom board and main P.C.B.")**
3. Remove the hinge setscrews ㊲ ~ ㊵ . Then the upper cabinet can be removed. **(See photo 8.)**
4. Remove the clamps ㊶ and ㊷ which secure the two connectors of the tonearm, and remove the disc size sensor P.C.B.
5. Remove the tonearm rope retaining part setscrews ㊸ and ㊹ . Then the tonearm unit can be removed. **(See photo 10.)**

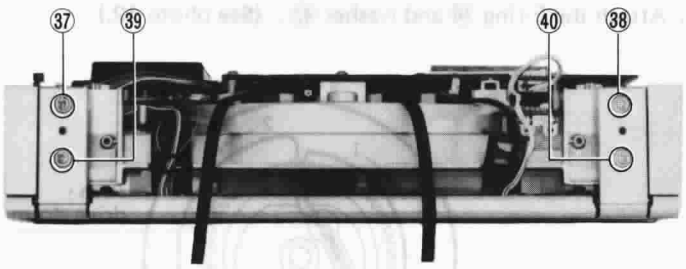

Photo 8

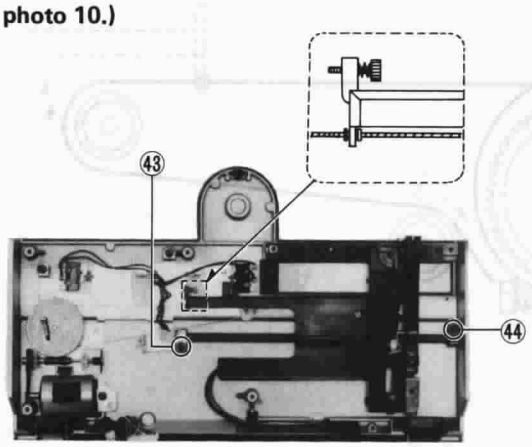

Photo 10

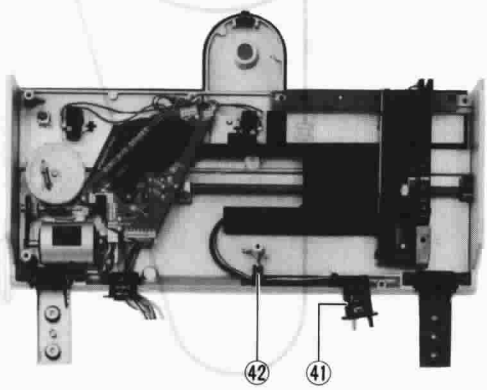

Photo 9

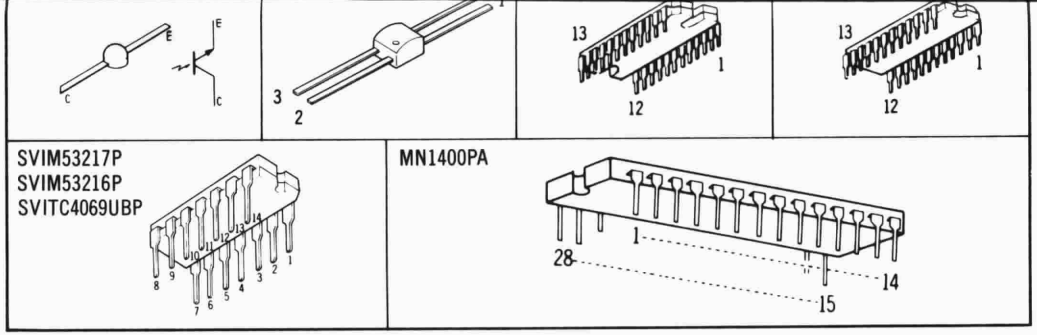

■ REFERENCE VOLTAGE AND WAVEFORM AT EACH IC TERMINAL (PIN)

This indicated voltage values and waveform are measured by oscilloscope at 33rpm rotation.

IC101 (AN6635)

	Stop	Start		Stop	Start		Stop	Start
①	11.2 V	11.2 V	⑨	0 V	1.0 V	⑰	0.6 V	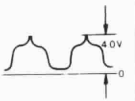
②	9.3 V	9.3 V	⑩	7.8 V	5.0 V	⑱		
③	11.2 V	11.2 V	⑪	5.0 V	5.0 V	⑳		
④	2.0 V	2.1 V	⑫	0 V	0 V	㉑		
⑤	2.0 V	2.1 V	⑬	11.8 V	11.8 V	⑲	0 V	0 V
⑥	2.0 V	2.1 V	⑭	11.2 V	11.2 V	㉒	0 V	0 V
⑦	2.1 V	2.1 V	⑮	11.8 V	11.7 V	㉓	3.2 V	3.2 V
⑧	0 V	0 V	⑯	11.2 V	11.1 V	㉔	2.5 V	2.5 V

IC201 (AN6680)

	Stop	Start		Stop	Start		Stop	Start
①	2.4 V	2.4 V	⑩	9.3 V	9.3 V	⑰	5.0 V	5.0 V
②	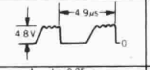	Same as at left	⑪		Same as at left	⑱	0 V	0 V
③						⑲	0.1 V	6.9 V
④	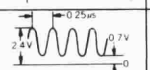	Same as at left	⑫	0 V	0 V	⑳	5.0 V	0.2 V
			⑬	0.15 V	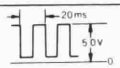	㉑	0.1 V	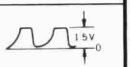
⑤	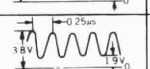	Same as at left	⑭	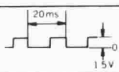	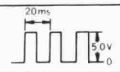	㉒	3.1 V	2.9 V
⑥	3.3 V	3.3 V				㉓	3.1 V	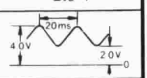
⑦	0 V	0 V	⑮	8.0 V	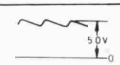			
⑧	0 V	0 V				㉔	2.7 V	2.9 V
⑨	10.0 V	10.0 V	⑯	1.9 V	5.0 V			

NOTES:

1. **S1-1, S1-2:** Power switch in "**on**" position.
2. **S2:** AC – DC select switch in "**AC**" position.
3. **S3:** Power select switch in "**220 – 240V**" position.
4. **S201:** Speed select switch in "**auto**" position.
5. **S301-1, 301-2:** Start switch in "**off**" position. (not push condition).
   ※◁◀. . . Moves inward (S301-1) ◀◀. . . Moves faster (S301-2)
6. **S302-1, 302-2:** Stop switch in "**off**" position. (not push condition).
   ※▶▷. . . Moves outward (S302-1) ▶▶. . . Moves faster (S302-2)
7. **S303:** Cueing switch in "**off**" position (not push condition).
8. **S304:** Repeat switch in "**off**" position. (not push condition).
9. **S305:** Cover switch in "**off**" position.
10. **S306:** Start position switch in "**off**" position.
11. **S307:** Return position switch in "**off**" position.
12. ☐ Indicated voltage values are the standard values for the unit measur by the DC electronic circuit tester (high impedance) with the chassis take as standard. Therefore, there may exist some errors in the voltage values depending on th einternal impedance of the DC circuit tester.
13. ⚠ indicates that only parts specified by the manufacture be used for safety.
14. ■ +Ⓑ voltage line.

■ TERMINAL GUIDE OF TRANSISTORS AND IC'S

2SC1846 2SC886 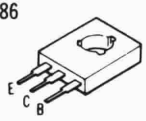	2SB643, 2SB641 2SB636, 2SD638 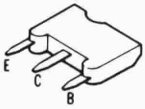	2SC1328 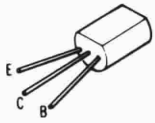	2SC2385 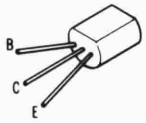
SVIUPC7812H SVIUPC78M05H 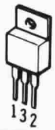	ON1161 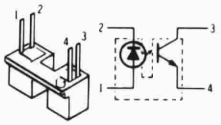	ON1108 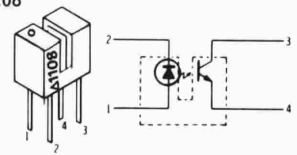	
SVTPH101	H-300A 4	AN6635 24	AN6680 24