Hello all,

Finally, here it is. The service manual of the famous Technics SL1200Mk2 turntables.
If you didn't noticed already, some pages are missing, but those pages weren't very interesting or they were in German language. And that is the last thing you want ;-)

Some pages have to be layed next to each other to get the whole picture, like pages 13, 14 and 16 and 17.

Don't come complaining about the quality of the scanned pictures, because at www.1200s.com you have to pay 20 USDollars for it and now it is for free. Don't tell anyone. ;-)

We hope you can use the service manual for whatever purpose!
have a nice time..

Robert Jan
www.backspin.org

ORDER NO. DAD9400/S0

Service Manual

Supplement

Nieuw

Kast Schakeling SFUP122-23 SFUP122-24. SFUM102N04.

Turntable System

SL-1200MK2

[M], [MC],

[E], [EK], [XL], [EG], [EB], [EH],

[EF], [Ei], [XA], [PA], [PE], [PC]

SL-1210MK2

[E], [EG], [EH]

Areas

- * [M] is available in the U.S.A.
- * [MC] is available in Canada.
- * [E] is available in Switzerland and Scandinavia.
- * [EK] is available in United Kingdom.
- * [XL] is available in Australia.
- * [EG] is available in F.R. Germany.
- * [EB] is available in Belgium.
- * [EH] is available in Holland.
- * [EF] is available in France.
- * [Ei] is available in Italy.
- * [XA] is available in Southeast Asia, Oceania, Africa, Middle Near East and Central South America.
- * [PA] is available in far East PX.
- * [PE] is available in European Military.
- * [PC] is available in European Audio Club.

*SL-1200MK2 is the model for silver type.
*SL-1210MK2 is the model for black type of SL-1200MK2.

Please use this manual together with the service manual for Model No. SL-1200MK2/1210MK2.

English

Specifications

Specifications are subject to change without notice for further improvement.
Weight and dimensions shown are approximate.

■ General

Power supply:	120V, AC 60 Hz (For [M], [MC] areas) ~110-120/220-240V, 50 or 60 Hz (For other areas)
Power consumption:	14 W (For [M], [MC] areas) 13.5 W (For other areas)
Dimensions: **(W x H x D)**	45.3 x 16.2 x 36 cm (17-27/32" x 6-19/64" x 14-11/64")
Weight:	12.5 kg (27.6 lb)

Turntable section

Type:	Quartz direct drive Manual turntable
Dirve method:	Direct drive
Motor:	Brushless DC motor
Turntable platter:	Aluminum diecast Diameter 33.2 cm (13-5/64") Weight 2 kg (4.4 lb)
Turntable speeds:	33-1/3 rpm and 45 rpm
Starting torque:	1.5 kg · cm (1.3 lb · in)
Build-up characteristics:	0.7 s. from standstill to 33-1/3 rpm
Braking system:	Electronic brake
Wow and flutter:	0.01% WRMS* 0.025% WRMS (JIS C5521) ± 0.035% peak (IEC 98A Weighted)

* This rating refers to turntable assembly alone, excluding effects of record, cartridge or tonearm, but including platter. Measured by obtaining signal from built-in frequency generator of motor assembly.

Rumble:	–56 dB (IEC 98A Unweighted) –78 dB (IEC 98A Weighted)

Technics

Balie Service Manual

SL-1200MK2/1210MK2

■ Tonearm section

Type:	Universal
Effective length:	230 mm (9-1/16")
Arm height adjustment range:	0 – 6 mm
Overhang:	15 mm (19/32")
Effective mass:	12 g (without cartridge)
Offset angle:	22°
Friction:	Less than 7 mg (lateral, vertical)
Tracking error angle:	Within 2°32' (at the outer groove of 30 cm (12") record Within 0°32' (at the inner groove of 30 cm (12") record
Stylus pressure adjustment range:	0 – 2.5 g
Applicable cartridge weight range:	6 – 10 g 13.5 – 17.5 g (including headshell)
(with auxiliary weight):	9.5 – 13 g 17 – 20.5 g (including headhsell)
(with shell weight):	3.5 – 6.5 g 11 – 14 g (including headshell)
Headshell weight:	7.5 g

Notes

- ★ To improve the performance of SL-1200MK2/1210MK2, the bottom structure and circuit are changed in the course of production.
- ★ After the change, SL1200MK2–A/1210MK2–A is indicated in the name plate as the model of the set. It is discriminated from before-change set by –A. Also, check that the present change is of the sets after the change mark [D] shown in the sirial No. sheet attached to the bottom and carton box.
- ★ This supplement service manual contains the bottom plate disassembly procedure, change part No., circuit diagram, P.C.B. and block diagrams. The other contents are the same as for the service manual of SL-1200MK2/1210MK2 already issued.
- ★ Sets with cartridge (EPC-207C) are included in those for same areas.
- ★ Since the power transformer fitting method is different for sets with serial number sheet change mark [E], refer to the development plan on page 8.

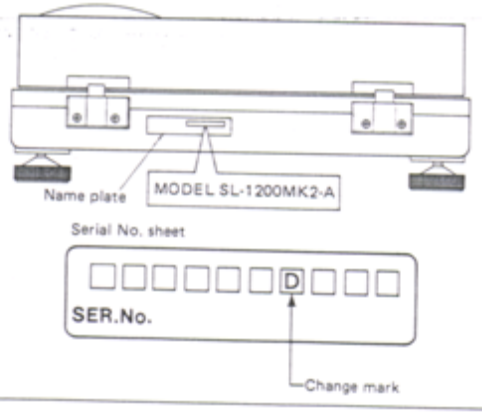

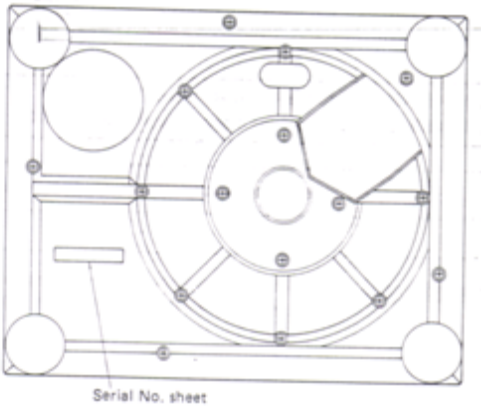

Deutsch

TECHNISCHE DATEN

Änderungen der technischen Daten vorbehalten.
Die angegebenen Gewichts- und Abmessungsdaten sind ungefähre Werte.

■ Allgemeine Daten

Stromversorgung:	~110-120/220-240 V, 50/60 Hz Wechselstrom
Leistungsaufnahme:	13,5 W
Abmessungen: (B × H × T):	45,3 × 16,2 × 36 cm
Gewicht:	12,5 kg

■ Plattenspieler

Typ:	Manueller Quarz-Direktantrieb-Plattenspieler
Antrieb:	Direktantrieb
Motor:	Kollektorloser Gleichstrommotor
Plattenteller:	Aluminium-Spritzguß Durchmesser 33,2 cm Gewicht 2 kg
Plattenteller-Drehzahlen:	33-1/3 und 45 U/min
Anlautdrehmoment:	1,5 kg · cm
Drehzahl-Hochlaufzeit:	0.7 s. vom Stillstand auf 33-1/3 U/min
Bremssystem:	Elektronische Bremse
Gleichlaufschwankungen:	0,01% WRMS* 0,025% WRMS (JIS C5521) ± 0,035% Spitze (IEC 98A bewertet)

* Diese Nennleistung bezieht sich auf das Laufwerk-Bauteil allein, ausschließlich Einflüsse von Schallplatte, Tonabnehmer oder Tonarm, aber einschließlich Plattenteller.
Gemessen anhand von Signalen vom eingebauten Frequenzgenerator des Motorbauteils.

Rumpel-Geräusch-spannungsabstand:	–56 dB (IEC 98A unbewertet) –78 dB (IEC 98A bewertet)

- **How to remove the hinge case**

1. Remove the bottom cover. (Refer to "How to remove the bottom cover".)
2. Remove the 4 setscrews (Fig. 2 : ❺) of the hinge case bracket.
3. Remove the 4 setscrews (Fig. 2 : ❻) of the hinge case.

Note: The other disassembly procedure are the same as for before-change sets.

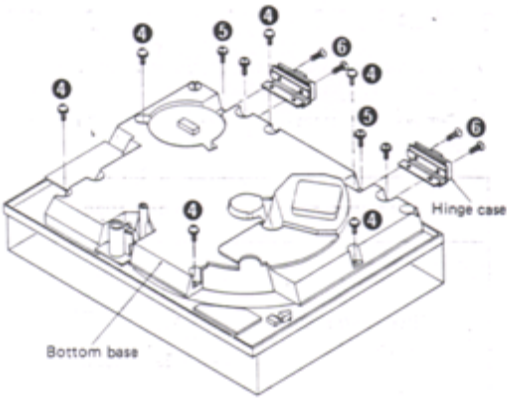

Fig. 2

■ REPLACEMENT PARTS LIST

Notes:

1. This parts list mentions only the difference between before and after change of SL-1200MK2/1210MK2.
2. Ⓚ-marked parts are used only for SL-1210MK2 (black type). And O-marked parts are used for SL1200MK2 (silver type).
3. Parts other than Ⓚ- and O-marked are used for both SL-1210MK2 and SL-1200MK2.
4. The "Ⓢ" mark is service standard parts and may differ from production parts.

Areas

- * [M] is available in the U.S.A.
- * [MC] is available in Canada.
- * [E] is available in Switzerland and Scandinavia.
- * [EK] is available in United Kingdom.
- * [XL] is available in Australia.
- * [EG] is available in F.R. Germany.
- * [EB] is available in Belgium.
- * [EH] is available in Holland.
- * [EF] is available in France.
- * [EI] is available in Italy.
- * [XA] is available in Southeast Asia, Oceania, Africa, Middle Near East and Central South America.
- * [PA] is available in far East PX.
- * [PE] is available in European Military.
- * [PC] is available in European Audio Club.

The Integrated ckt Pg 10-11

Ref. No.	Change of Part No. SL-1200MK2 (Before Change)	→ SL-1200MK2/1210MK2 (After Change)	Part Name & Description	Per Set (Pcs.)	Remarks
INTEGRATED CIRCUIT					
IC302	SVITC4011BP	MN4011B	NAND Gate	1	
TRANSISTOR					
Q1	2SD389A–Q	2SD1265	Regulator	1	
DIODES					
D1	SVDS1RBA40	SVDS1RBA20Z	Rectifier	1	△
D201, 202	SVDSR–105C	SVDPR3902S–9	Speed Indicator	2	
D203 ~ 206	SVDEBR5505S	SVDSLH54VT3	Strobe	4	
D401	SVDGL–9PG2	SVDGL–9NG2	Pitch Indicator	1	
CRYSTAL					
X201	SVQU306115	SVQMS4193	4.193 MHz, Oscillator	1	
VARIABLE RESISTORS					
VR301	EVMH2GA00B53	EVMH1GA00B23	Pitch Control Adjustment, 2kΩ (B)	1	
VR303	EVBJ05C19ABE	SFDZ122N11	Pitch Control	1	
SWITCHES					
S203	SFDSSS5GL13C	SFDSSS01GL13	Start/Stop	1	
S601	SFDSSS5GL13S	SFDSSS5GL13P	Power	1	△
TRANSFORMER					
T1	SLT60EU7B	SLT66DTL3A [M]	Power Source	1	△
T1	SLT60E31C	SLT66DT14C [MC]	Power Source	1	△
T1	SLTF5900	SLT66DTE13A [Other areas]	Power Source	1	△

Ref. No.	Change of Part No. SL-1200MK2 (Before Change)	→ SL-1200MK2/1210MK2 (After Change)	Part Name & Description	Per Set (Pcs.)	Remarks
RESISTORS					
R4	ERD25FJ561	ERD25FJ471	Carbon, 1/4W, 470Ω	1	Ⓢ
R209	ERD25TJ154	ERD25TJ334	Carbon, 1/4W, 330kΩ	1	Ⓢ
R211	ERD25FJ103	ERD25FJ472	Carbon, 1/4W, 4.7kΩ	1	Ⓢ
R212	ERD25FJ121	ERD25FJ151	Carbon, 1/4W, 150Ω	1	Ⓢ
R222	Addition	ERD25FJ391	Carbon, 1/4W, 390Ω	1	Ⓢ
R301	ERO25CKF3301	ERO25CKF2701	Metal Film, 1/4W, 2.7kΩ	1	Ⓢ
R304	ERD25FJ152	ERD25FJ561	Carbon, 1/4W, 560Ω	1	Ⓢ
R401	Addition	ERD50FJ152	Carbon, 1/2W, 1.5kΩ	1	Ⓢ
R601	ERD25FJ4R7	ERD50FJ4R7	Carbon, 1/2W, 4.7Ω	1	△ Ⓢ
CAPACITORS					
C5, 6	Addition	ECQM1223KZ	Polyester, 125V, 0.022μF	1	△
C104 ~ 107	ECQM1H104KZ	ECQM1H104JZ	Polyester, 50V, 0.1μF	4	Ⓢ
C109, 110	ECQM1H104KZ	ECQM1H104JZ	Polyester, 50V, 0.1μF	2	Ⓢ
C111	ECQM1H562KZ	ECQM1H562JZ	Polyester, 50V, 0.0056μF	1	Ⓢ
C204	ECQM1H473KZ	ECQM1H473JZ	Polyester, 50V, 0.047μF	1	Ⓢ
C210	ECQM1H224KZ	ECQM1H224JZ	Polyester, 50V, 0.22μF	1	Ⓢ
C211	ECQM1H473KZ	ECQM1H473JZ	Polyester, 50V, 0.047μF	1	Ⓢ
C217 ~ 219	Addition	ECKD1H104ZF	Ceramic, 50V, 0.1μF	1	Ⓢ
C301	ECQK1123FZ	ECQK1333GZ	Polyester, 125V, 0.033μF	1	
C302	ECQK1123FZ	ECQK1682GZ	Polyester, 125V, 0.0068μF	1	
C305	ECQM1H122KZ	ECQM1H122JZ	Polyester, 50V, 0.0012μF	1	Ⓢ
CABINET and CHASSIS PARTS					
9	SFUP122–12	Deletion	----------	0	
10	SFAC122–01	SFAC122–01	Cabinet (Silver)	1	○
		SFAC124S01	Cabinet (Black)	1	Ⓚ
25	SFXB122–02	SFXB122–06	Boss, Drive	1	
33	SFQA001–02	SFQA122–03	Spring	1	
36	SFUP025–01	SFUP122–16 [M, MC, PA, PE, PC]	Bracket, AC Cord	1	
	SFUP025X01	SFUP122X01 [Other areas]	Bracket, AC cord	1	
38	SFUP132–03	SFGC122–03	Cushion	2	
40	SFUP122–10	Deletion	----------	0	
42	SFKK122–03	SFKK122–03	Plate (Silver)	1	
		SFKK124S01	Plate (Black)	1	
48	SFAU122–01	SFAU122–02	Bottom Base	1	
48–1	Addition	SFAU122–03	Bottom Cover	1	
49	SFUP122–05	SFUP122–23	Supporter (A), Hinge	2	
50	SFUP122–04	SFUP122–24	Supporter (B), Hinge	2	
51	SFUM170–07	SFUMM02N04	Case, Hinge	2	
55	SFNN122M01	SFNN122M10 [M]	Name Plate	1	○
	SFNN122C01	SFNN122C10 [MC]	Name Plate	1	○
	SFNN122S01	SFNN122S10 [E]	Name Plate	1	○
	SFNN122L01	SFNN122G10 [EK, XL]	Name Plate	1	○
	SFNN122X01	SFNN122X10 [XA]	Name Plate	1	○
	Addition	SFNN122P10 [PA, PE]	Name Plate	1	○
	Addition	SFNN122P11 [PC]	Name Plate	1	○
	SFNN122N01	SFNN122N10 [Other areas]	Name Plate	1	○
	Addition	SFNN124S10 [E]	Name Plate	1	Ⓚ
	Addition	SFNN124Q10 [EG, EH]	Name Plate	1	Ⓚ
56	SFX0122–01	Deletion	----------	0	
57	SFX0122–02	Deletion	----------	0	
58	SFAT122–01A	SFATM02N01A	Hinge	1	

Ref. No.	Change of Part No. SL-1200MK2 (Before Change)	→ SL-1200MK2/1210MK2 (After Change)	Part Name & Description	Per Set (Pcs.)	Remarks
TONEARM PARTS					
62	SFPAM18201K	SFPAM18201K	Tonearm Ass'y (Silver)	1	○
		SFPAM18202K	Tonearm Ass'y (Black)	1	Ⓚ
79	SFPKB17201S	SFPKB17204E	Ring, Arm Base Operation	1	
82	SFGK132–01	SFGK132–01	Cap (Silver)	1	○
		SFGK133S01	Cap (Black)	1	Ⓚ
ACCESSORIES					
A1	SFNU122M01	SFNU122M06 [M]	Instruction Book	1	
	SFNU122C01	SFNU122C06	Instruction Book	1	
	SFNU122S01	SFNU122S01 [E]	Instruction Book	1	
	SFNU122G01	SFNU122G01 [EK]	Instruction Book	1	
	Addition	SFNU122P01 [PA, PE, PC]	Instruction Book	1	
	SFNU122X01	SFNU122X01 [Other areas]	Instruction Book	1	
A2	SFWE010	SFWE122–01	45 Adaptor	1	
PACKING PARTS					
P1	SFHP122C01	SFHP122C02 [MC, EF]	Carton Box (Silver)	1	○
	SFHP122M01	SFHP122M02 [Other areas]	Carton Box (Silver)	1	○
		SFHP124S02	Carbon Box (Black)	1	Ⓚ
P9	Addition	SPB1083	Polyethylene Bag, Accessories	2	
P10	Addition	SPJ15	Polyethylene Bag, Shell Weight	1	
P11	Addition	SFHZD03M01	Polyethylene Bag, Dust Cover	3	
P12	Addition	SFHZ122–01	Polyethylene Bag, 45 Adaptor	1	
P13	Addition	SPP189	Polyethylene Bag, Cords	2	

■ ADJUSTMENT POINTS

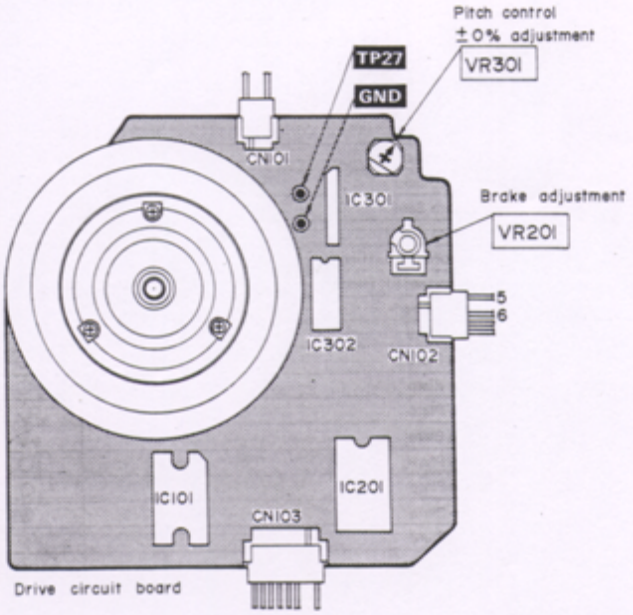

Fig. 3 (Abb. 3)

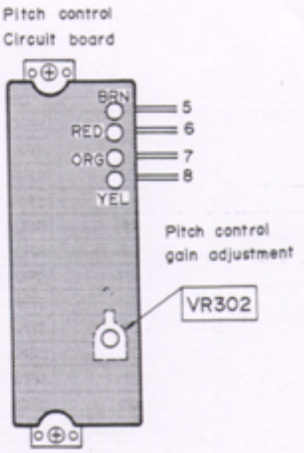

Fig. 4 (Abb. 4)

■ MEASUREMENTS AND ADJUSTMENTS — English

- **Conditions of set, and instruments used**

1. Remove the panel cover.
2. Remove the bottom cover (when adjusting the pitch control gain).
3. Frequency counter
4. Tester

	Adjustment	Connection	Parts adjusted	Procedure
1	Pitch control ± 0% adjustment	Frequency counter (+) – TP27 (–) – Earth point	VR301 (Fig. 3)	1. Connect the frequency counter and turn the power supply ON. 2. Set the pitch control knob to "0". (Indicator lights up.) 3. Adjust VR301 so that the frequency is 262.08 kHz ± 0.05 kHz.
2	Pitch control gain adjustment	Tester (+) – CN102 terminal ⑤ (–) – CN102 terminal ⑥	VR302 (Fig. 4)	1. Set the pitch control knob to "0". 2. Pull out the connector CN102 of drive P.C.B. 3. Connect the tester to terminals,⑤and⑥of connector CN102 on the pitch control P.C.B. side. 4. Adjust VR302 so that the resistance value of the tester is 2.7 kΩ ± 0.1 kΩ.
3	Brake adjustment	———	VR201 (Fig. 3)	1. Adjust VR201 so that the rotation at 33 r.p.m. stops within the angle of 90° ~120° after depressing the stop button.

■ MESSUNGEN UND JUSTIERUNGEN — Deutsch

- **Zustand des Gerätes und zu verwendende Instrumente**

1. Die Abdeckplatte entfernen.
2. Die Bodenadbeckung entfernen (wenn die Drehzahlregelungs-Verstärkung justiert werden soll).
3. Frequenzzähler
4. Prüfgerät

	Justierung	Anschlüsse	Zu justierender Teile	Vorgehen
1	± 0%-Justierung des Drehzahlreglers	Frequenzzähler (+) – TP27 (–) – Massepunkt	VR301 (Abb. 3)	1. Frequenzzähler anschließen und Netzschalter einschalten. 2. Drehzahlreglerknopf auf "0" stellen. (Anzeige leuchtet auf.) 3. VR301 so justieren, daß die Frequenz 262,08 kHz ± 0,05 kHz beträgt.
2	Justierung der Drehzahlregelungs-Verstärkung	Prüfgerät (+) – CN102 Anschluß ⑤ (–) – CN102 Anschluß ⑥	VR302 (Abb. 4)	1. Den Drehzahlreglerknopf auf "0" einstellen. 2. Steckverbindung CN102 von der Antriebsplatine hrausziehen. 3. Prüfgerät an Anschlüsse⑤und⑥der Steckverbindung CN102 auf der Drehzahlreglerseite der Platine anschließen. 4. VR302 so justieren, daß der Widerstandswert des Prüfgerätes 2,7 kΩ ± 0,1 kΩ beträgt.
3	Bremsjustierung	———	VR201 (Abb. 3)	1. VR201 so justieren, daß die Rotation bei 33 UPM innerhalb 90° ~ 120° nach Drücken der Stop-Taste stoppt.

onearm Parts

■ RESISTORS AND CAPACITORS

otes:
1. Part numbers are indicated on most mechanical parts. Please use this part number for parts orders.
2. Important safety notice: Components identified by ⚠ mark have special characteristics important for safety. When replacing any of these components use only manufacturer's specified parts.
3. The "Ⓢ" mark is service standard parts and may differ from production parts.
4. Bracketed indications in Ref. No. colum specify the area. Parts without these indications can be used for all area.
5. The unit of resistance is Ω (ohm). K = 1000Ω, M = 1000kΩ
6. The unit capacitance is μF (microfarad). P = 10^{-6} μF

Areas

* [M] is available in the U.S.A.
* [MC] is available in Canada.
* [E] is available in Switzerland and Scandinavia.
* [EK] is available in United Kingdom.
* [XL] is available in Australia.
* [EG] is available in F.R. Germany.
* [EB] is available in Belgium.
* [EH] is available in Holland.
* [EF] is available in France.
* [Ei] is available in Italy.
* [XA] is available in Southeast Asia, Oceania, Africa, Middle Near East and Central South America.
* [PA] is available in far East PX.
* [PE] is available in European Military.
* [PC] is available in European Audio Club.

Numbering System of Resistor

Example

ERD	25	F	J	101
Type	Wattage	Shape	Tolearance	Value
ERX	2	AN	J	2R2
Type	Wattage	Shape	Tolerance	Value

Resistor type	Wattage	Tolerance
ERD: Carbon	25 : 1/4W	F : ±1%
ERG: Metal Oxide	50 : 1/2W	J : ±5%
ERO: Metal Film	1A : 1W	
ERX: Metal Film	2A : 2W	

Numbering System of Capacitor

Example

ECKD	1H	102	Z	F
Type	Voltage	Value	Tolerance	Peculiarity
ECEA	50	M	R47	R
Type	Voltage	Reculiarity use	Value	Special use

Capacitor Type		Voltage		Tolearnce	
ECEA	: Electrolytic	OJ	: 6.3V	J	: ±5%
ECEB	: Electrolytic	1C	: 16V	K	: ±5%
ECCD	: Ceramic	1E	: 25V	M	: ±20%
ECQM	: Polyester	1H	: 50V	Z	: +80%,−20%
ECQU	: Polyester	1	: 100V		
ECQF	: Polyester	1A	: 125V		
ECNC	: Polyester	4A	: 400V		

Ref. No.		Part No.	Value
RESISTORS			
R1	Ⓢ	ERD25FJ562	5.6K
R2	Ⓢ	ERD25FJ682	6.8K
R3	Ⓢ	ERD25FJ272	2.7K
R4,5	Ⓢ	ERD25FJ471	470
R101	Ⓢ	ERD25FJ103	10K
R102	Ⓢ	ERX1ANJ4R7	4.7
R103	Ⓢ	ERD25FJ472	4.7K
R104	Ⓢ	ERD25TJ473	47K
R105	Ⓢ	ERD25FJ103	10K
R106	Ⓢ	ERD25FJ150	15
R107	Ⓢ	ERX1ANJ1R5	1.5
R108	Ⓢ	ERD25FJ103	10K
R109,110	Ⓢ	ERX1ANJ4R7	4.7
R201	Ⓢ	ERG1ANJ561	560
R202	Ⓢ	ERD25FJ103	10K
R203	Ⓢ	ERD25FJ470	47
R204	Ⓢ	ERD25FJ272	2.7K
R205	Ⓢ	ERD25TJ124	120K
R206	Ⓢ	ERD25TJ183	18K
R207	Ⓢ	ERD25TJ563	56K
R208	Ⓢ	ERD25TJ224	220K
R209	Ⓢ	ERD25TJ334	330K

Ref. No.		Part No.	Value
R210	Ⓢ	ERD25TJ183	18K
R211	Ⓢ	ERD25FJ472	4.7K
R212	Ⓢ	ERD25FJ151	150
R213	Ⓢ	ERD25FJ122	1.2K
R214	Ⓢ	ERD25TJ223	22K
R215	Ⓢ	ERD25FJ472	4.7K
R216	Ⓢ	ERD25TJ154	150K
R217	Ⓢ	ERD25TJ223	22K
R218	Ⓢ	ERD25FJ102	1K
R219	Ⓢ	ERD25FJ332	3.3K
R220	Ⓢ	ERD25FJ221	220
R221	Ⓢ	ERD25FJ471	470
R222	Ⓢ	ERD25FJ391	390
R301	Ⓢ	ERD25CKF2701	2.7K
R302	Ⓢ	ERD25FJ471	470
R303	Ⓢ	ERD25FJ822	8.2K
R304	Ⓢ	ERD25FJ561	560
R305	Ⓢ	ERD25FJ181	180
R306	Ⓢ	ERD25TJ223	22K
R307	Ⓢ	ERD25FJ272	2.7K
R401	⚠ Ⓢ	ERD50FJ152	1.5K
R601	⚠ Ⓢ	ERD50FJ4R7	4.7

Ref. No.		Part No.	Value
CAPACITORS			
C1		ECEB1HU471	470
C2		ECEA1EU330	33
C3		ECEA1EU220	22
C5,6		ECQM1223KZ	0.022
C101,102		ECEA1EU330	33
C103		ECEA1EU330	33
C104,105	Ⓢ	ECQM1H104JZ	0.1
C106,107	Ⓢ	ECQM1H104JZ	0.1
C108		ECEA1EU101	100
C109,110	Ⓢ	ECQM1H104JZ	0.1
C111	Ⓢ	ECQM1H562JZ	0.0056
C112		ECEA1HU4R7	4.7
C201		ECEA1CU330	33
C202,203		ECEA1HU010	1
C204	Ⓢ	ECQM1H473JZ	0.047
C205		ECEA0JU221	220
C206		ECEA1HU010	1
C207	Ⓢ	ECCD1H101K	100P
C208	Ⓢ	ECCD1H220K	22P
C209		ECEA1CU101	100

Ref. No.		Part No.	Value
C210	Ⓢ	ECQM1H224JZ	0.22
C211	Ⓢ	ECQM1H473JZ	0.047
C212		ECEA1HU3R3	3.3
C213	Ⓢ	ECCD1H471K	470P
C214		ECEA1CU101	100
C215		ECEA1HU010	1
C216		ECEA1CU470	47
C217,218		ECKD1H104ZF	0.1
C219		ECKD1H104ZF	0.1
C301		ECQK1333GZ	0.033
C302		ECQK1682GZ	0.0068
C303		ECEA1HU010	1
C304		ECEA1CU100	10
C305	Ⓢ	ECQM1H122JZ	0.0012
C306		ECEA1HU010	1
C601 (M)	⚠	ECQF1A473MD	0.047
C601 (MC)	⚠	ECQU1A47ME	0.047
C601 (Other area)	⚠	ECNC4A473M	0.047

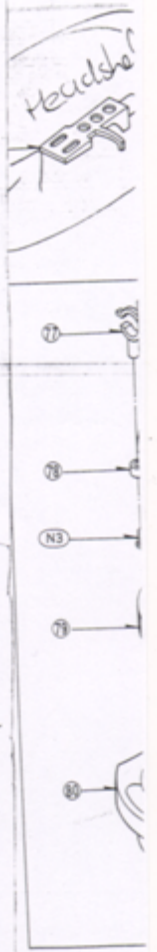

■ REPLACEMENT PARTS LIST

Notes:
1. Part numbers are indicated on most mechanical parts. Please use this part number for parts orders.
2. Important safety notice: Components identified by ⚠ mark have special characteristics important for safety. When replacing any of these components use only manufacturer's specified parts.
3. Bracketed indications in Ref. No. columns specify the area. Parts without these indications can be used for all areas.
4. The "Ⓢ" mark is service standard parts and may differ from production parts.
5. The parenthesized numbers in the column of description stand for the quantity per set.
6. Ⓚ-marked parts are used only for SL-1210MK2 (black type). And ○-marked parts are used for SL-1200MK2 (silver type).
7. Parts other than Ⓚ-and ○-marked are used for both SL-1210MK2 and SL-1200MK2.

Areas

- * [M] is available in the U.S.A.
- * [MC] is available in Canada.
- * [E] is available in Switzerland and Scandinavia.
- * [EK] is available in United Kingdom.
- * [XL] is available in Australia.
- * [EG] is available in F.R. Germany.
- * [EB] is available in Belgium.
- * [EH] is available in Holland.
- * [EF] is available in France.
- * [EI] is available in Italy.
- * [XA] is available in Southeast Asia, Oceania, Africa, Middle Near East and Central South America.
- * [PA] is available in far East PX.
- * [PE] is available in European Military.
- * [PC] is available in European Audio Club.

Ref. No.	Part No.	Description
INTEGRATED CIRCUITS		
IC101	AN6675	Turntable Drive
IC201	AN6680	Turntable Control
IC301	AN6682	Pitch Control
IC302	MN4011B	NAND Gate
TRANSISTORS		
Q1	2SD1265	Regulator
Q2,3	2SD637	Regulator
Q201 Ⓢ	2SC1846-R	Regulator
Q202	2SD637	LED Driver
Q203 Ⓢ	2SC1328-T	FG Amp.
DIODES		
D1 ⚠	SVDS1RBA20Z	Rectifier
D2	MA1051	5.1V Zener
D201,202	SVDPR3902S-9	Speed Indicator
D203~206	SVDSLH54VT3	Strobe
D204A	MA162A	Switching
D301	MA1051	5.1V Zener
D401	SVDGL-9NG2	Pitch Indicator

Ref. No.	Part No.	Description
CRYSTAL		
X201	SVQMS4193	4.193MHz Oscillator
VARIABLE RESISTORS		
VR201 Ⓢ	EVTS3MA00B54	Brake Adjustment,50kΩⓑ
VR301	EVMH1GA00B23	Pitch Control±0% Adjustment,2kΩⓑ
VR302 Ⓢ	EVTS3MA00B54	Pitch Control Gain Adjustment,50kΩⓑ
VR303	SFDZ122N11 X	Pitch Control
SWITCHES		
S201,202	EVQP5R04K	Speed Selector
S203	SFDSSS01GL13	Stort/Stop
S401	SFDSD2MSL-C	Stylus-Illuminator
S601 ⚠	SFDSSS5GL13P	Power
S602 Except for (M,MC) ⚠	SFDSHXW01317	Voltage Selector

Ref. No.	Part No.	Description
LAMP		
PL1 ⚠	SFDN122-01 X	Stylus Illuminator
TRANSFORMER		
T1 (M) ⚠	SLT66DTL3A	Power Source
T1 (MC) ⚠	SLT66DT14C	Power Source
T1 (Other areas) ⚠	SLT66DTE13E	Power Source
FUSES		
F1 (MC) ⚠	XBA1F12NU14	125V,1.2A
F1 Except for (M,MC) ⚠	XBA2C025T1A	250V,T250mA
F2 Except for (M,MC) ⚠	XBA2C10TR0	250V,T1A

LAMP

Fader.

Shell holds circuits

Ref. No.
CHABIN
1
2
3
4
5
6
7
8
10
10
11
12
13
14
15
16
17
18
19
20
21
22
23
24
25
26
27
28
29
30
31
32
33
34
35 (M,MC PE,I
35 (EK)
35 (Other areas)
36 (M,MC PE,I
36 (Other areas)
37 (M,MC
37 (EK)
37 (XL)
37 (PA,PE,I
37 (Other ar
38
39
41
42
42
43
44
45
46
48
48-1
49
50
51

SL-1200MK2/1210MK2

Ref. No.	Part No.	Description	
CHABINET AND CHASSIS PARTS			
1	SFAD122-01A	Dust Cover	(1)
2	SFTG172-01	Turntable Mat	(1)
3	SFTE172-01	Turntable Platter Ass'y	(1)
4	SFUM172-05	Cover, Cabinet	(1)
5	SFMGQ20-01	Cover, Drive Coil	(1)
6	SFMGS20-31A	Drive Coil Ass'y	(1)
7	SFMZ172-01E	FG Coil Ass'y	(1)
8	SFMZQ20-01A	Shaft Ass'y, Turntable	(1)
10 ○	SFAC122-01	Cabinet (Silver)	
10 ®	SFAC124S01	Cabinet (Black)	(1)
11	SFUM172-04	Ornament, Stylus Illuminator	(1)
12	SFKT122-01	Knob, Power Switch	(1)
13	SFKK122-01E	Case, Strobe Illuminator	(1)
14	SFKT015-06	Button, Start/Stop	(1)
15	SFQA122-01	Spring, Start/Stop Button	(1)
16	SFUM122-01	Base, Operation	(1)
17	SFKT015-01E	Button, Speed 33	(1)
18	SFDJ122-02E	Connector, 7pin	(1)
19	SFGZ122-01	Spacer, Rubber	(1)
20	SFYB-5-32	Ball, Switch Cam	(1)
21	SFQA520-01	Spring, Switch Cam	(1)
22	SFUM122-03	Cam, Power Switch	(1)
23	SFUM015-11	Spacer, Speed Indicator	(2)
24	SFKK172-01	Cover,Stylus Illuminator	(1)
25	SFXB122-06	Boss, Drive	(1)
26	SFQA172-01	Spring, Drive Boss	(1)
27	SFXJ172-01	Pin, Lock Canceler	(1)
28	SFUP122-02E	Bracket, Stylus Illuminator	(1)
29	SFUP122-03	Plate, Lock Operation	(1)
30	SFDJ122-03E	Connector, 3pin	(1)
31	SFX0172-01	Pin, Guide	(1)
32	SFQA520-01	Spring, Lock Canceler	(1)
33	SFQA122-02	Spring, Lock Operation Plate	(1)
34	SFXJ172-05	Pin, Lock Operation Plate	(1)
35 [M,MC,PA PE,PC]	SFHK040L	Clamper, AC Cord	(1)
35 [EK]	SFSR-5N-4	Clamper, AC Cord	(1)
35 [Other areas]	SFSR-4N-4	Clamper, AC Cord	(1)
36 [M,MC,PA PE,PC]	SFUP122-16	Bracket, AC Cord	(1)
36 [Other areas]	SFUP122X01	Bracket, AC Cord	(1)
37 △⑤ [M,MC]	RJA9Y	AC Cord	(1)
37 [EK] △⑤	QFC1205M	AC Cord	(1)
37 [XL] △⑤	SJAG23	AC Cord	(1)
37 △⑤ [PA,PE,PC]	SJA83	AC Cord	(1)
37 △⑤ [Other areas]	SJA88	AC Cord	(1)
38	SFGC122-03	Rubber, Power Transformer	(2)
39	SFGC122-01	Cushion, Power Transformer	(3)
41	SFKT122-02	Knob, Pitch Control	(1)
42 ○	SFKK122-03	Ornament (Silver), Pitch Control	(1)
42 ®	SFKK124S01	Ornament (Black), Pitch Control	(1)
43	SFUZ122-01	Felt	(1)
44	SFUP122-09	Holder, LED	(1)
45	SFUP122-01	Bracket, Pitch Control	(1)
46	SFDJ122-01E	Connector, 4pin	(1)
48	SFAU122-02	Bottom Base	(1)
48-1	SFAU122-03	Bottom Cover	(1)
49	SFUP122-23	Supporter (A),Hinge	(2)
50	SFUP122-24	Supporter (B), Hinge	(2)
51	SFUMM02N04	Case, Hinge	(2)

Ref. No.	Part No.	Description	
52	SFGC122-02E	Insulator	(4)
54	SFKT015-02E	Button, Speed 45	(1)
55 [M] ○	SFNN122M10	Name Plate	(1)
55 [MC] ○	SFNN122C10	Name Plate	(1)
55 [E] ○	SFNN122S10	Name Plate	(1)
55 [EK,XL] ○	SFNN122G10	Name Plate	(1)
55 [XA] ○	SFNN122X10	Name Plate	(1)
55 [PA,PE] ○	SFNN122P10	Name Plate	(1)
55 [PC] ○	SFNN122P11	Name Plate	(1)
55 [Other areas] ○	SFNN122N10	Name Plate	(1)
55 [E] ®	SFNN124S10	Name Plate	(1)
55 [EG,EH] ®	SFNN124Q10	Name Plate	(1)
58	SFATM02N01A	Hinge	(2)
59	SFUP122-25	Plate,Power transformer	(1)
TONEARM PARTS			
61	SFPCC31001K	Headshell	(1)
62 ○	SFPAM18201K	Tonearm Ass'y (Silver)	(1)
62 ®	SFPAM18202K	Tonearm Ass'y (Black)	(1)
63	SFPWG17201K	Balance Weight	(1)
64	SFPRT18201K	Lift Ass'y	(1)
65	SFPZB17202	Knob, Arm Base Lock	(1)
66	SFQA829-03	Spring, Lift Ass'y	(1)
67	SFPAB13202	Knob, Arm Lift	(1)
68	SFPJL18202K	Oil Damper	(1)
70	SFPZB12203	Plate, Arm Base Cover	(1)
71	SFUM170-06	Spacer, Phono Cord	(1)
72	SEPZB12204	Clamper, Phono Cord	(1)
73	SFPAB18201K	Tonearm Fixing Plate	(1)
74	SFPZB12201K	Plate	(1)
75	SFDH122-05	Phono Cord	(1)
76	SFEL028-01E	Ground Wire	(1)
77	SFPRT17201K	Arm Rest	(1)
78 ○	SFPKD17203	Arm Base (Silver)	(1)
78 ®	SFPKD17205	Arm Base (Black)	(1)
79	SFPKB17204E	Ring,Arm Base Operation	(1)
80	SFPKD12201	Bracket, Arm Base	(1)
81	SFPAB17206	Knob, Anti-Skating	(1)
82 ○	SFGK132-01	Cap (Silver)	(1)
82 ®	SFGK133S01	Cap (Black)	(1)
SCREW,NUT AND WASHERS			
N1 ⑤	XTN3+8BFZ	Screw	(5)
N2	SFXGQ20-02	Screw	(3)
N3 ⑤	XTN3+8B	Screw	(8)
N4 ⑤	XWG3	Washer	(10)
N5 ⑤	XTN26+6B	Screw	(3)
N6 ⑤	XTV3+8BFN	Screw	(8)
N7	SFXG172-01	Screw	(3)
N8	XTN3+5J	Screw	(2)
N9	SFXW172-03	Washer	(1)
N10	SFPEW11003	Washer	(6)
N11 ⑤	XWE3E10	Washer	(3)
N12 ⑤	XWA3B	Washer	(8)
N13 ⑤	XSN3+10S	Screw	(3)
N14	SFXW910J02	Washer	(1)
N15 ⑤	XTN3+10B	Screw	(5)
N16 ⑤	XTN2+10B	Screw	(1)
N17 ⑤	XUC3FT	Circlip	(2)
N18	XSN17+3FY	Screw	(1)
N19 ⑤	XUC2FT	Circlip	(1)
N20 ⑤	XUC25FT	Circlip	(1)
N21 ⑤	XSN3+14S	Screw	(1)
N22	RTW-12	Circlip	(1)
N23 ⑤	XSN2+10	Screw	(2)
N24 ⑤	XSN3+6S	Screw	(2)
N25 ⑤	XTN3+6B	Screw	(5)
N26	XTWS3+14TFZ	Screw	(6)
N27	SFXG122-02	Screw	(1)
N29	SFXG122-01	Screw	(4)
N30	XTN3+14QFZ	Screw	(6)

Ref. No.	Part No.	Description	
N31 ⑤	XWG3FZ	Washer	(6)
N32 ⑤	XSN3+14BVS	Screw	(4)
N33 ⑤	XWA3BFZ	Washer	(4)
N34	SFXG829-1	Screw	(1)
N35 ⑤	XSN3+8S	Screw	(2)
N36 ⑤	XUC5FT	Circlip	(1)
N37	SFPEV17202	Screw	(3)
N38 ⑤	XTN3+25B	Screw	(1)
N39	SFPEW1100	Washer	(1)
N40 ⑤	XSN3+6BVS	Screw	(4)
N41 ⑤	XWC3BFZ	Washer	(1)
N42 ⑤	XSN3+12BVS	Screw	(2)
N43 ⑤	XWG3FZ	Washer	(2)
N44	SFXW701-02	Washer	(1)
N45	SFPEW00705	Washer	(4)
N46	XTW26+5E	Screw	(1)
ACCESSORIES			
A1 [M]	SFNU122M06	Instruction Book	(1)
A1 [MC]	SFNU122C06	Instruction Book	(1)
A1 [E,EB,EC]	SFNU122S01	Instruction Book	(1)
A1 [EK]	SFNU122G01	Instruction Book	(1)
A1 [PA, PE,PC]	SFNU122P01	Instruction Book	(1)
A1 [Other areas]	SFNU122X01	Instruction Book	(1)
A2	SFWE010	45 Adaptor	(1)
A3	SFPEN3302	Nut,Cartridge	(2)
A4	SFPEW9601	Washer,Cartridge	(2)
A5	SFCZV8801	Screw,Cartridge	(2)
A6	SFPEV9801	Screw,Cartridge	(2)
A7	SFK0135-01	Overhang Gauge	(1)
A8	SFPZB3501	Shell Weight	(1)
A9 △ [XA] Only	SFDKI19118	2pin Plug	(1)
A10	SFPWG17202	Sub-weight	(1)
A11 △ [PA,PE, PC] Only	QJP0603S	Adaptor, Gimens	
PACKING PARTS			
P1 [MC, EF] ○	SFHP122C02	Carton Box (Silver)	(1)
P1 [Other areas] ○	SFHP122M02	Carton Box (Silver)	(1)
P1 ®	SFHP124S02	Carton Box (Black)	(1)
P2	SFHH122-01	Pad, Front	(1)
P3	SFHH122-02	Pad, Rear	(1)
P4	SFHD122N05	Pad, Top	(1)
P5	SFHD122-02	Pad (A), Turntable	(1)
P6	SFHD122N06	Pad (B), Turntable	(1)
P7	SFYH60X60	Polyethylene Bag, Unit& Dust Cover	(2)
P8	SFYH40X45	Polyethylene Bag, Turntable	(1)
P9	SPB1083	Polyethylene Bag, Accessories	(3)
P10	SPJ15	Polyethylene Bag, Shell Weight	(1)
P11	SFHZD03M01	Cover Sheet, Dust Cover	(1)
P12	SFHZ122-01	Cover Sheet, 45Adaptor	(1)
P13	SPP189	Cover Sheet, Cords	(2)

■ EXPLODED VIEWS

- Cabinet and Chassis Parts

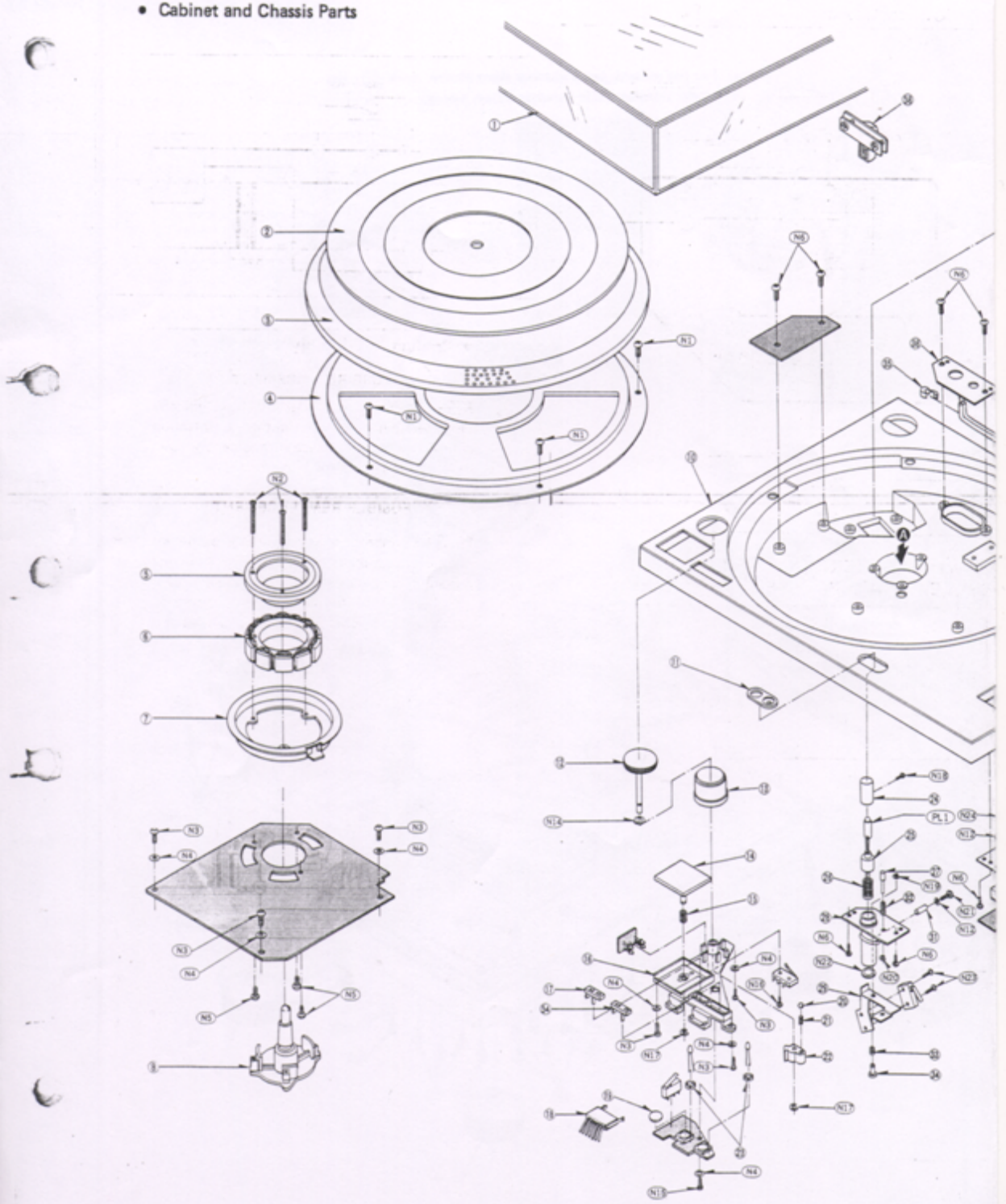

Note: For the set with serial number sheet change mark [E], the power transformer is fitted as shown below.

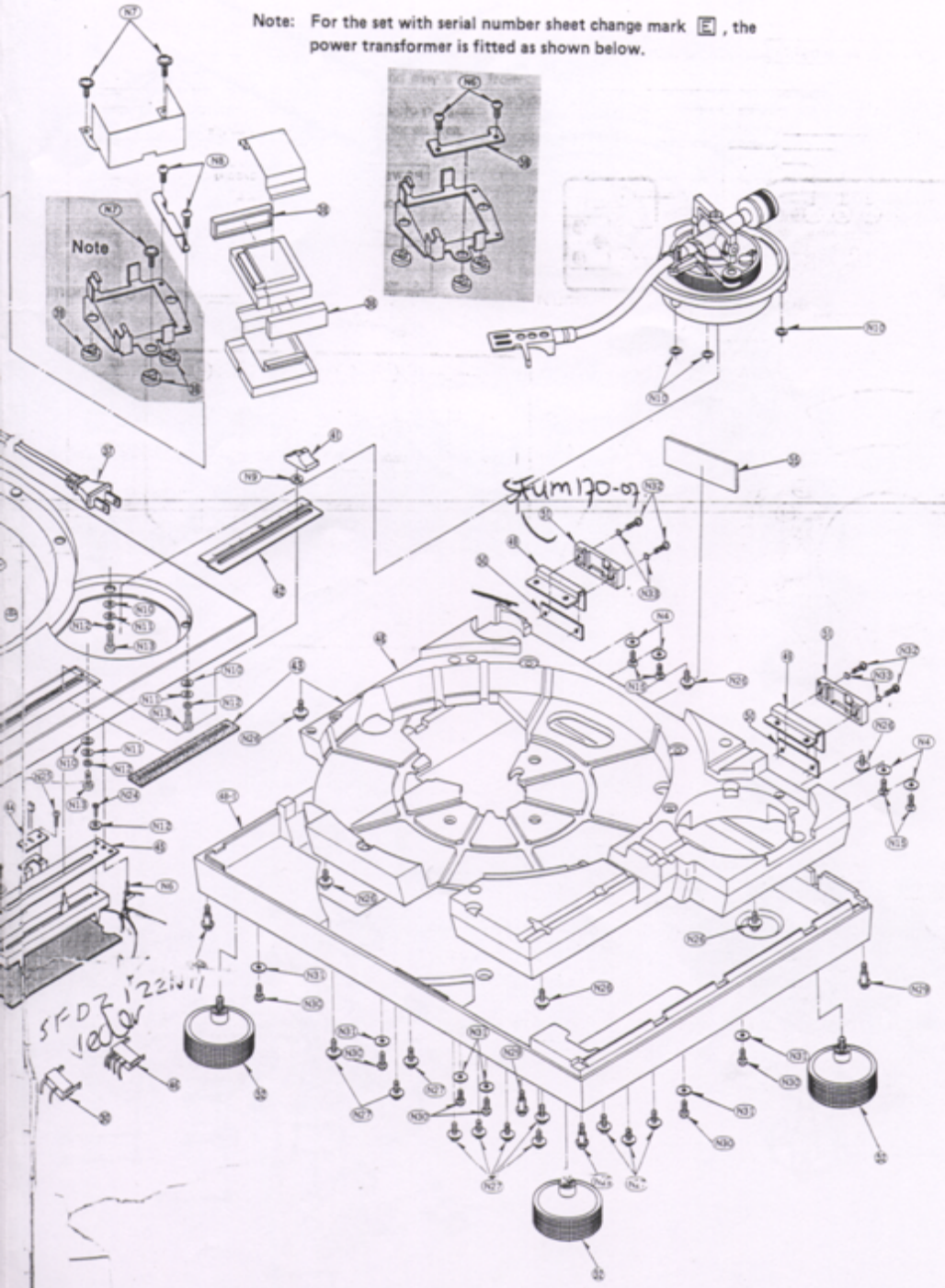

Tonearm P

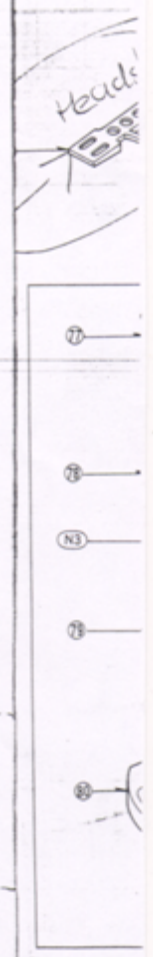

■ E

• Tonearm Parts

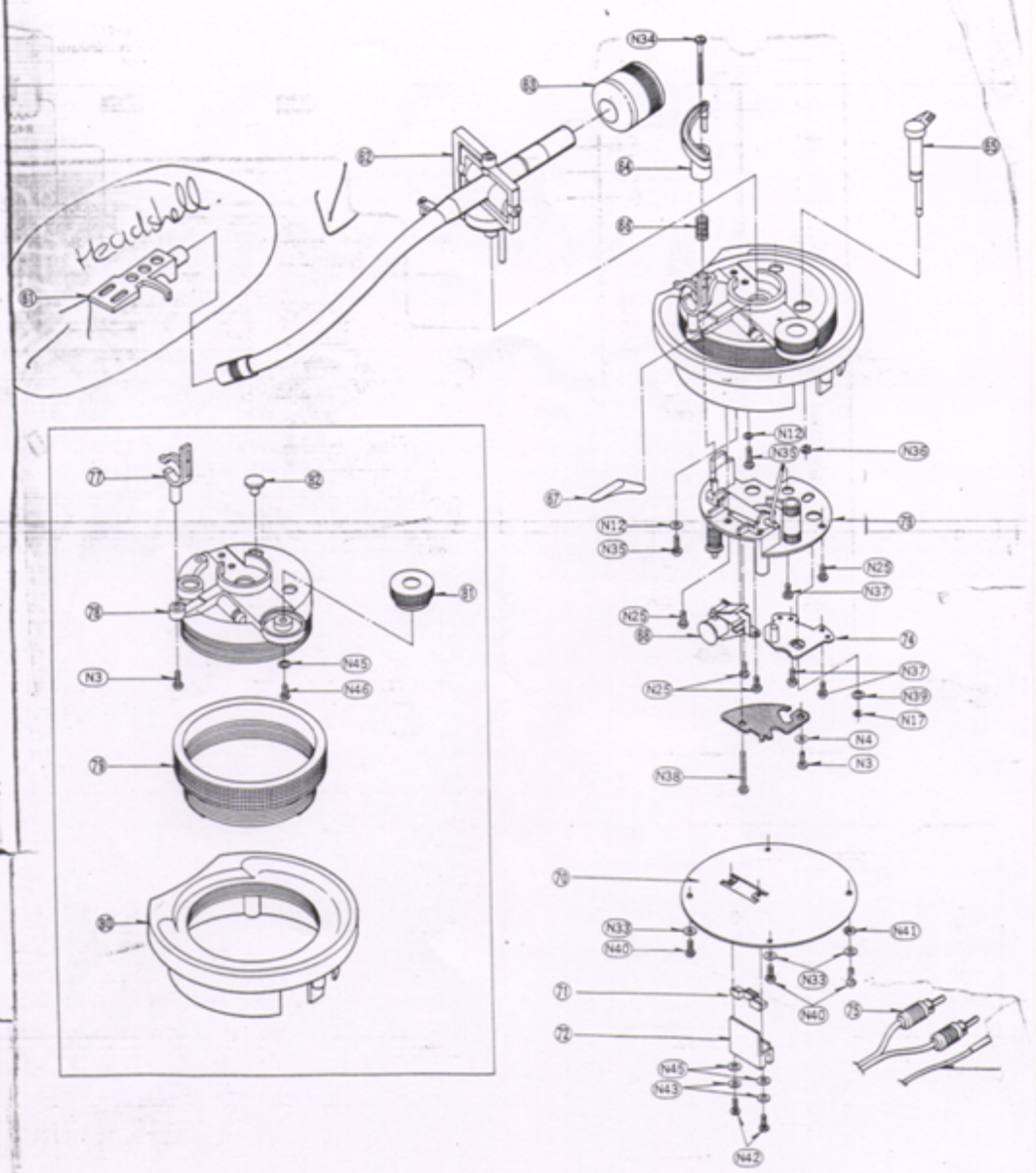

1200MK2/1210MK2

RSGN.

CIRCUIT BOARD AND WIRING CONNECTION DIAGRAM

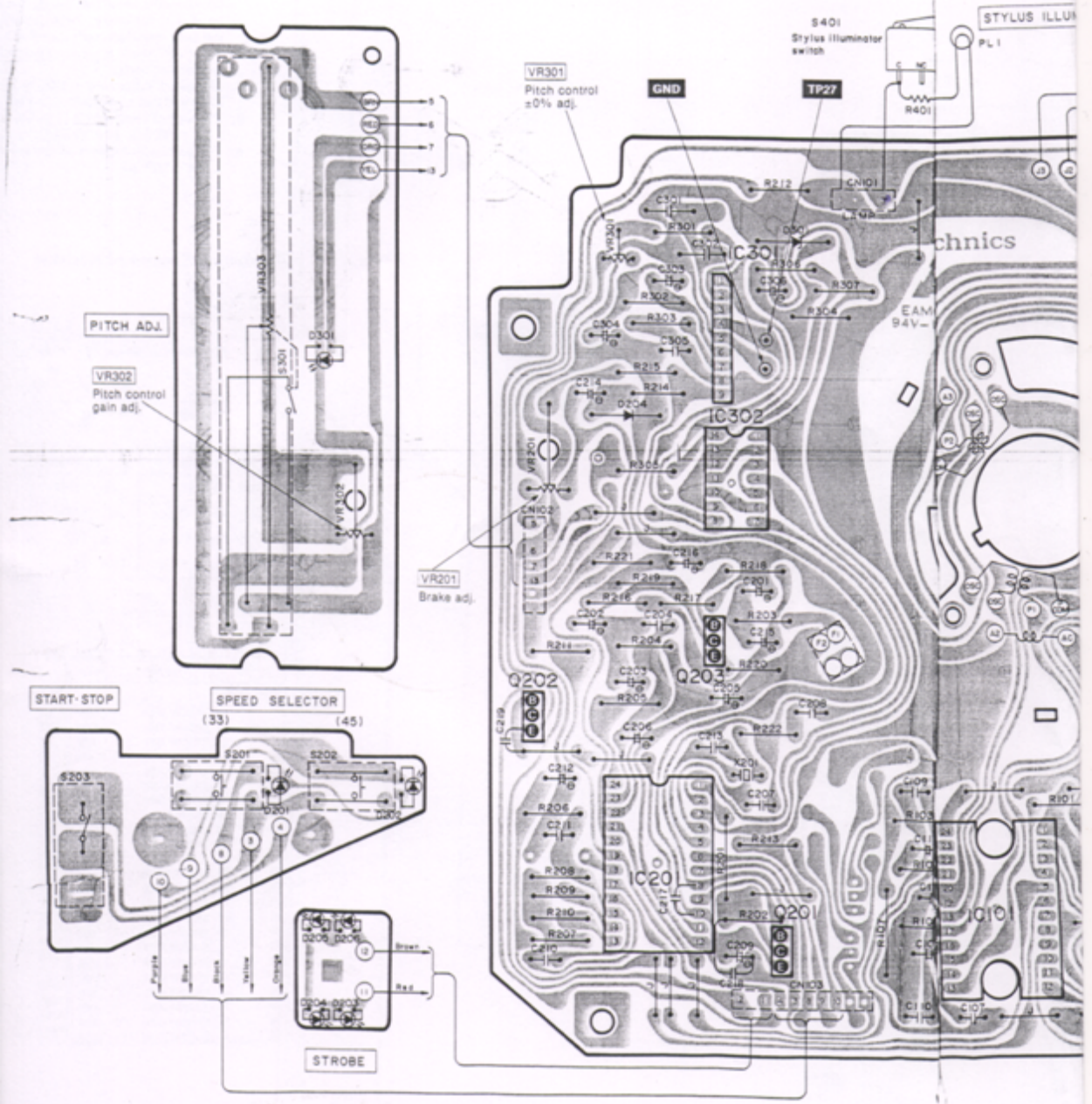

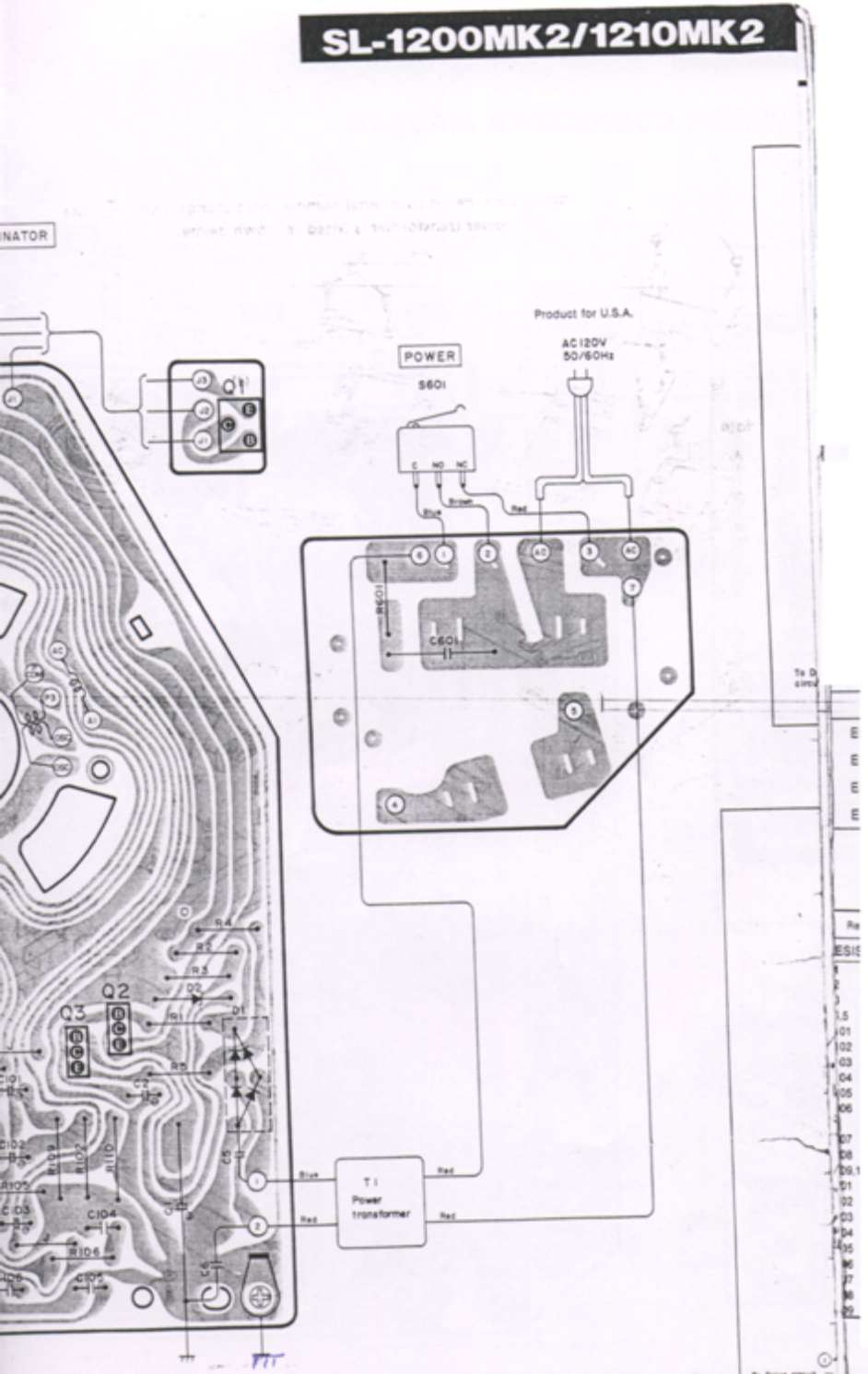
NATOR
Product for U.S.A.
AC 120V
50/60Hz
POWER
S601
C
NO
NC
Blue
Brown
Red
R601
C601
Q1
Q2
Q3
R4
R7
R3
D2
D1
R5
C5
C4
C104
R106
C102
R107
R110
Blue
Red
T1
Power
transformer
Red
Red
To Drive circuit board

SL-1200MK2/1210MK2

- Power source circuit

  * Product for Canada

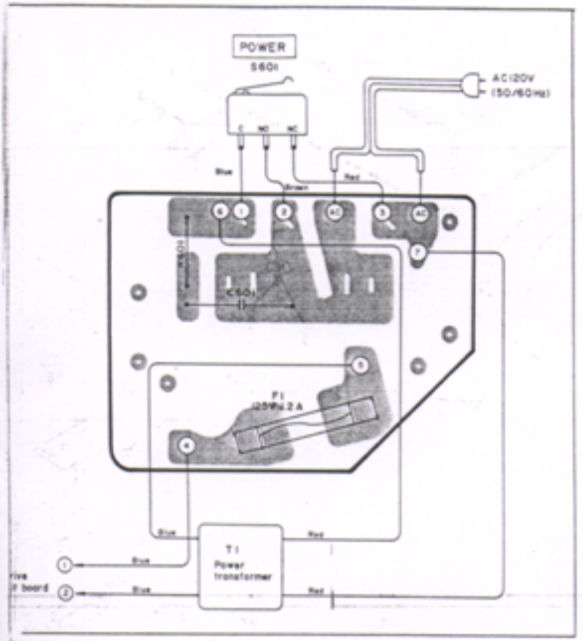

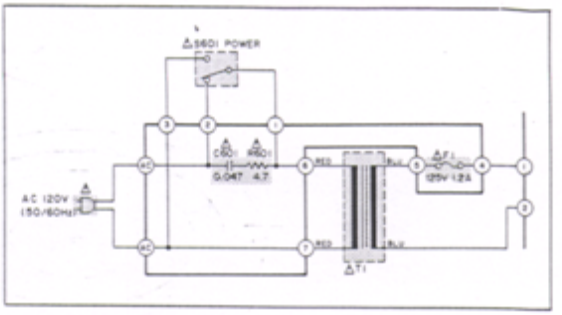

- Product for MC only

FUSE REPLACEMENT

Symbol located near the fuse indicates fast operating type. For continued protection against fire hazard, replace with same type fuse. Refer to the symbol for fuse rating.

FUSIBLE REMPLACEMENT

Le symbole qui se trouve près du fusible singifie un fusible à action rapide. Pour une protection contiue contre les risques d'incendie, n'utiliser que des fusibles du même type. Se rapporter au symbole pour la valeur des fusibles.

* Product for [E], [EK], [XL], [EG], [EB], [EH] [EF], [Ei], [XA], [PA], [PE] and [PC] areas

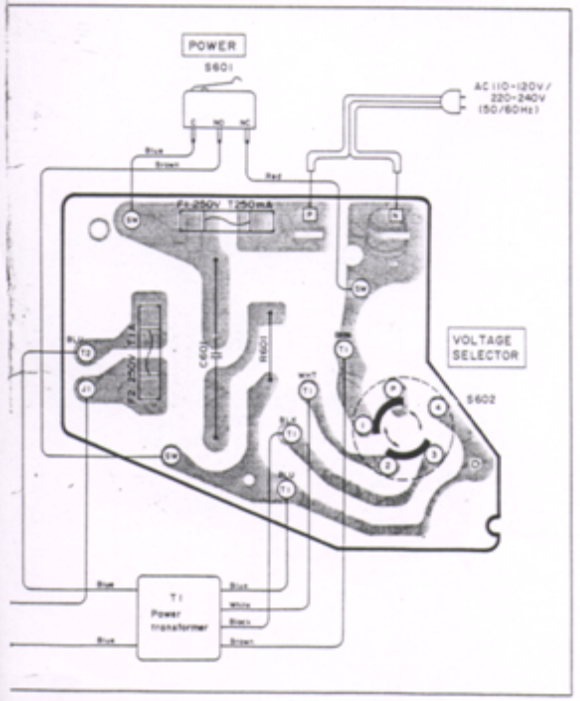

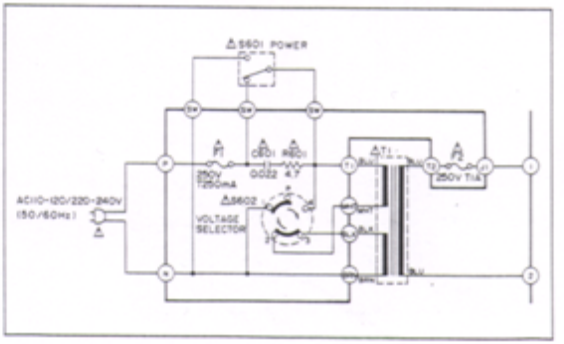

■ SCHEMATIC DIAGRAM

(This schematic diagram may be modified at any time with the development of new technology.)

Notes:

1. **S201, 202** : Speed selector switch.
2. **S203** : Start/stop switch.
3. **S301** : Pitch control reset switch in "**off**" position.
4. **S401** : Stylus illuminator switch in "**off**" position.
5. **S601** : Power switch in "**on**" position.
6. **S602** : Voltage selector in "**220 – 240**" position.
7. The voltage value, and waveforms are the reference voltage values of this unit measured by DC electronic voltmeter (high-impedance) and oscilloscope on the basis of chassis. Therefore, the voltage value and waveform may include some error due to the internal impedance of the tester or the measuring set.
   * [ ] is the voltage when turntable is in stop.
   * ( ) is the voltage when turntable is in rotation. (at 33 rpm)
8. ——— +B voltage lines.
9. Important safety notice.
   Components identified by ⚠ mark have special characteristics important for safety. When replacing any of these components, use only manufacturer's specified parts.
10. The part No. of diodes mentioned in the schematic diagram stand for production part No. Regarding the part No. with ✪ mark the production part No. are different from the replacement part No. Therefore, when placing an order for replacement part, please use the part No. in the replacement parts list.

IMPORTANT SAFETY NOTICE

The shaded area on this schematic diagram incorporates special features important for protection from fire and electrical shock hazards.
When servicing it is essential that only manufacturer's specified parts be used for the critical components in the shaded areas of the schematic.

- **Terminal guide of transistors, diodes and IC's**

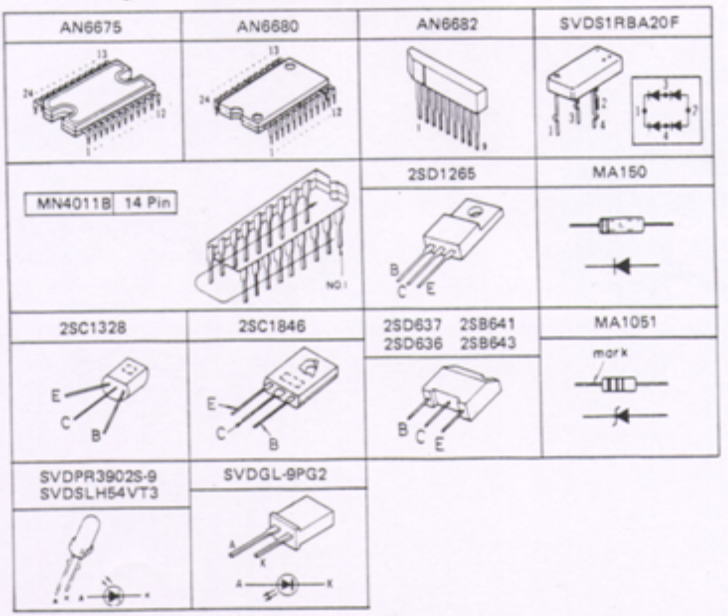

■ PACKING

1. Plase the unit (with cushions attached) as illustrated.
2. Fold the flaps according to the line marks.
3. Seal the top with adhesive tape.
   * Use gum tape or adhesive cloth tape of 50mm wide at least
4. For the edges, first fold the flap "a" and then flap "b", and staple. Remember to staple only flap "b". (Use 15 or 16mm staple)

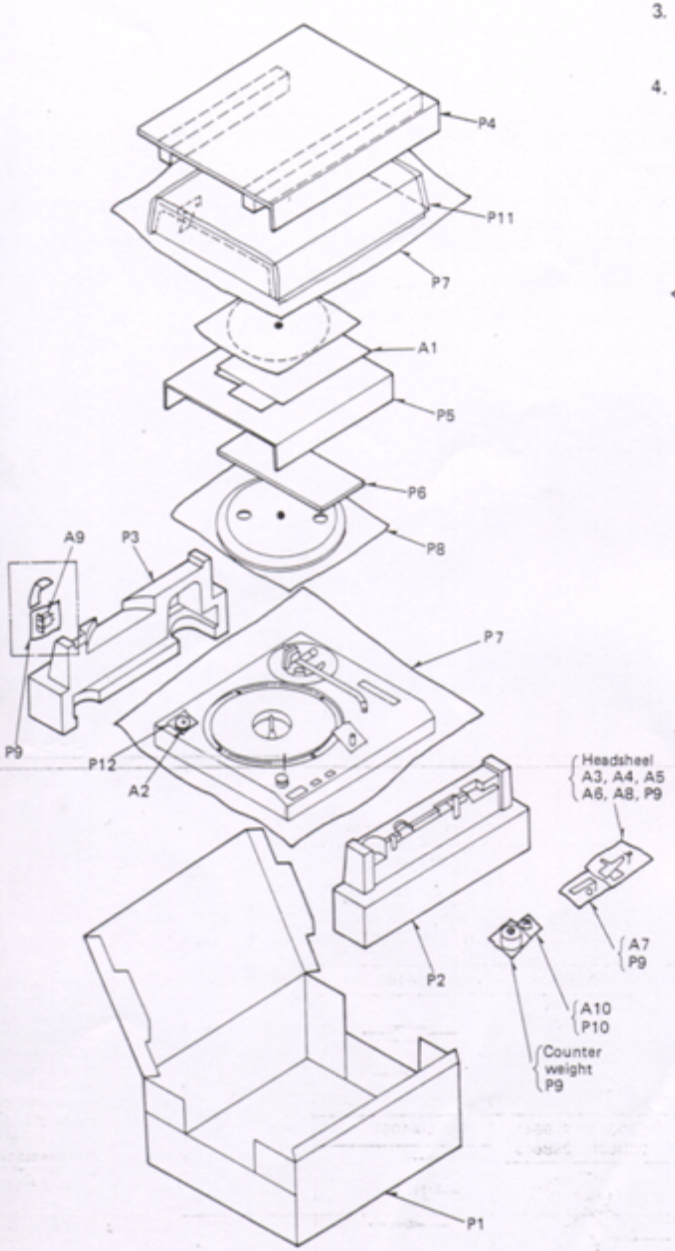

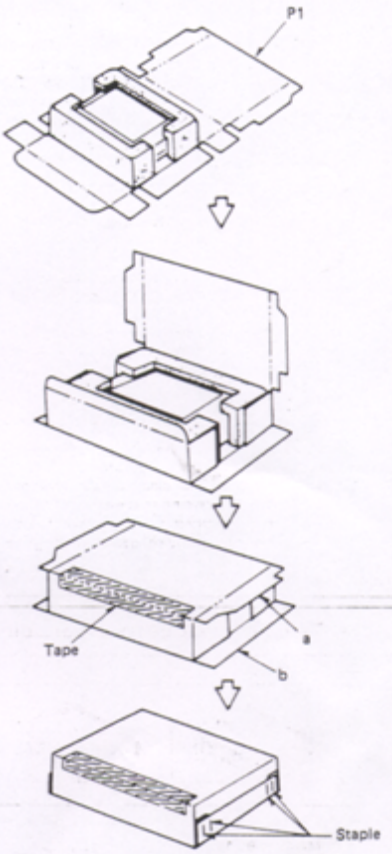

* Stapling positions are shown below.

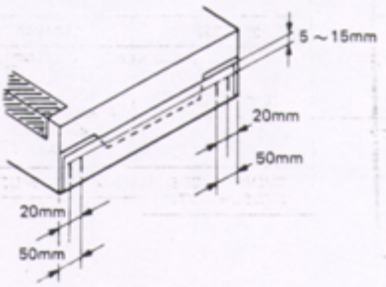

Printed in Japan
840412450 Ⓗ T.K.

Hello all,

Finally, here it is. The service manual of the famous Technics SL1200Mk2 turntables.
If you didn't noticed already, some pages are missing, but those pages weren't very interesting or they were in German language. And that is the last thing you want ;-)

Some pages have to be layed next to each other to get the whole picture, like pages 13, 14 and 16 and 17.

Don't come complaining about the quality of the scanned pictures, because at www.1200s.com you have to pay 20 USDollars for it and now it is for free. Don't tell anyone. ;-)

We hope you can use the service manual for whatever purpose!
have a nice time..

Robert Jan
www.backspin.org

ORDER NO. DAD9400/S0

Service Manual

Supplement

Nieuw

Kast Schakeling SFUP122-23 SFUP122-24. SFUM102N04.

Turntable System

SL-1200MK2

[M], [MC],

[E], [EK], [XL], [EG], [EB], [EH],

[EF], [Ei], [XA], [PA], [PE], [PC]

SL-1210MK2

[E], [EG], [EH]

Areas

- * [M] is available in the U.S.A.
- * [MC] is available in Canada.
- * [E] is available in Switzerland and Scandinavia.
- * [EK] is available in United Kingdom.
- * [XL] is available in Australia.
- * [EG] is available in F.R. Germany.
- * [EB] is available in Belgium.
- * [EH] is available in Holland.
- * [EF] is available in France.
- * [Ei] is available in Italy.
- * [XA] is available in Southeast Asia, Oceania, Africa, Middle Near East and Central South America.
- * [PA] is available in far East PX.
- * [PE] is available in European Military.
- * [PC] is available in European Audio Club.

*SL-1200MK2 is the model for silver type.
*SL-1210MK2 is the model for black type of SL-1200MK2.

Please use this manual together with the service manual for Model No. SL-1200MK2/1210MK2.

English

Specifications

Specifications are subject to change without notice for further improvement.
Weight and dimensions shown are approximate.

■ General

Power supply:	120V, AC 60 Hz (For [M], [MC] areas) ~110-120/220-240V, 50 or 60 Hz (For other areas)
Power consumption:	14 W (For [M], [MC] areas) 13.5 W (For other areas)
Dimensions: **(W x H x D)**	45.3 x 16.2 x 36 cm (17-27/32" x 6-19/64" x 14-11/64")
Weight:	12.5 kg (27.6 lb)

Turntable section

Type:	Quartz direct drive Manual turntable
Dirve method:	Direct drive
Motor:	Brushless DC motor
Turntable platter:	Aluminum diecast Diameter 33.2 cm (13-5/64") Weight 2 kg (4.4 lb)
Turntable speeds:	33-1/3 rpm and 45 rpm
Starting torque:	1.5 kg · cm (1.3 lb · in)
Build-up characteristics:	0.7 s. from standstill to 33-1/3 rpm
Braking system:	Electronic brake
Wow and flutter:	0.01% WRMS* 0.025% WRMS (JIS C5521) ± 0.035% peak (IEC 98A Weighted)

* This rating refers to turntable assembly alone, excluding effects of record, cartridge or tonearm, but including platter. Measured by obtaining signal from built-in frequency generator of motor assembly.

Rumble:	–56 dB (IEC 98A Unweighted) –78 dB (IEC 98A Weighted)

Technics

Balie Service Manual

SL-1200MK2/1210MK2

■ Tonearm section

Type:	Universal
Effective length:	230 mm (9-1/16")
Arm height adjustment range:	0 – 6 mm
Overhang:	15 mm (19/32")
Effective mass:	12 g (without cartridge)
Offset angle:	22°
Friction:	Less than 7 mg (lateral, vertical)
Tracking error angle:	Within 2°32' (at the outer groove of 30 cm (12") record Within 0°32' (at the inner groove of 30 cm (12") record
Stylus pressure adjustment range:	0 – 2.5 g
Applicable cartridge weight range:	6 – 10 g 13.5 – 17.5 g (including headshell)
(with auxiliary weight):	9.5 – 13 g 17 – 20.5 g (including headhsell)
(with shell weight):	3.5 – 6.5 g 11 – 14 g (including headshell)
Headshell weight:	7.5 g

Notes

- ★ To improve the performance of SL-1200MK2/1210MK2, the bottom structure and circuit are changed in the course of production.
- ★ After the change, SL1200MK2–A/1210MK2–A is indicated in the name plate as the model of the set. It is discriminated from before-change set by –A. Also, check that the present change is of the sets after the change mark [D] shown in the sirial No. sheet attached to the bottom and carton box.
- ★ This supplement service manual contains the bottom plate disassembly procedure, change part No., circuit diagram, P.C.B. and block diagrams. The other contents are the same as for the service manual of SL-1200MK2/1210MK2 already issued.
- ★ Sets with cartridge (EPC-207C) are included in those for same areas.
- ★ Since the power transformer fitting method is different for sets with serial number sheet change mark [E], refer to the development plan on page 8.

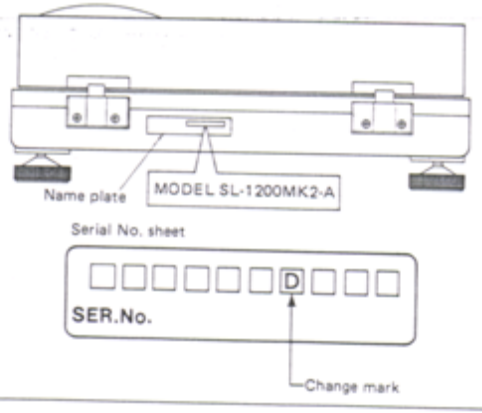

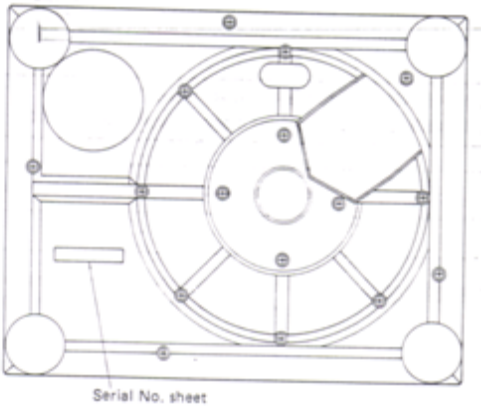

Deutsch

TECHNISCHE DATEN

Änderungen der technischen Daten vorbehalten.
Die angegebenen Gewichts- und Abmessungsdaten sind ungefähre Werte.

■ Allgemeine Daten

Stromversorgung:	~110-120/220-240 V, 50/60 Hz Wechselstrom
Leistungsaufnahme:	13,5 W
Abmessungen: (B × H × T):	45,3 × 16,2 × 36 cm
Gewicht:	12,5 kg

■ Plattenspieler

Typ:	Manueller Quarz-Direktantrieb-Plattenspieler
Antrieb:	Direktantrieb
Motor:	Kollektorloser Gleichstrommotor
Plattenteller:	Aluminium-Spritzguß Durchmesser 33,2 cm Gewicht 2 kg
Plattenteller-Drehzahlen:	33-1/3 und 45 U/min
Anlautdrehmoment:	1,5 kg · cm
Drehzahl-Hochlaufzeit:	0.7 s. vom Stillstand auf 33-1/3 U/min
Bremssystem:	Elektronische Bremse
Gleichlaufschwankungen:	0,01% WRMS* 0,025% WRMS (JIS C5521) ± 0,035% Spitze (IEC 98A bewertet)

* Diese Nennleistung bezieht sich auf das Laufwerk-Bauteil allein, ausschließlich Einflüsse von Schallplatte, Tonabnehmer oder Tonarm, aber einschließlich Plattenteller.
Gemessen anhand von Signalen vom eingebauten Frequenzgenerator des Motorbauteils.

Rumpel-Geräusch-spannungsabstand:	–56 dB (IEC 98A unbewertet) –78 dB (IEC 98A bewertet)

- **How to remove the hinge case**

1. Remove the bottom cover. (Refer to "How to remove the bottom cover".)
2. Remove the 4 setscrews (Fig. 2 : ❺) of the hinge case bracket.
3. Remove the 4 setscrews (Fig. 2 : ❻) of the hinge case.

Note: The other disassembly procedure are the same as for before-change sets.

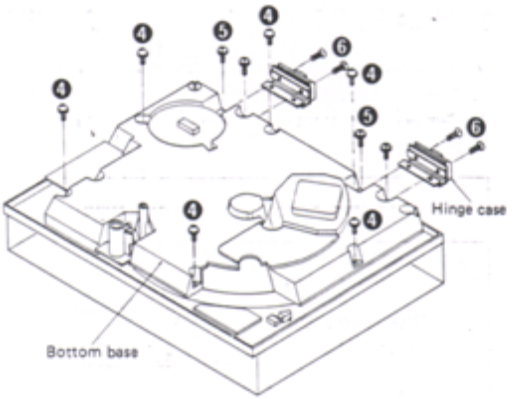

Fig. 2

■ REPLACEMENT PARTS LIST

Notes:

1. This parts list mentions only the difference between before and after change of SL-1200MK2/1210MK2.
2. Ⓚ-marked parts are used only for SL-1210MK2 (black type). And O-marked parts are used for SL1200MK2 (silver type).
3. Parts other than Ⓚ- and O-marked are used for both SL-1210MK2 and SL-1200MK2.
4. The "Ⓢ" mark is service standard parts and may differ from production parts.

Areas

- * [M] is available in the U.S.A.
- * [MC] is available in Canada.
- * [E] is available in Switzerland and Scandinavia.
- * [EK] is available in United Kingdom.
- * [XL] is available in Australia.
- * [EG] is available in F.R. Germany.
- * [EB] is available in Belgium.
- * [EH] is available in Holland.
- * [EF] is available in France.
- * [EI] is available in Italy.
- * [XA] is available in Southeast Asia, Oceania, Africa, Middle Near East and Central South America.
- * [PA] is available in far East PX.
- * [PE] is available in European Military.
- * [PC] is available in European Audio Club.

The Integrated ckt Pg 10-11

Ref. No.	Change of Part No. SL-1200MK2 (Before Change)	→ SL-1200MK2/1210MK2 (After Change)	Part Name & Description	Per Set (Pcs.)	Remarks
INTEGRATED CIRCUIT					
IC302	SVITC4011BP	MN4011B	NAND Gate	1	
TRANSISTOR					
Q1	2SD389A–Q	2SD1265	Regulator	1	
DIODES					
D1	SVDS1RBA40	SVDS1RBA20Z	Rectifier	1	△
D201, 202	SVDSR–105C	SVDPR3902S–9	Speed Indicator	2	
D203 ~ 206	SVDEBR5505S	SVDSLH54VT3	Strobe	4	
D401	SVDGL–9PG2	SVDGL–9NG2	Pitch Indicator	1	
CRYSTAL					
X201	SVQU306115	SVQMS4193	4.193 MHz, Oscillator	1	
VARIABLE RESISTORS					
VR301	EVMH2GA00B53	EVMH1GA00B23	Pitch Control Adjustment, 2kΩ (B)	1	
VR303	EVBJ05C19ABE	SFDZ122N11	Pitch Control	1	
SWITCHES					
S203	SFDSSS5GL13C	SFDSSS01GL13	Start/Stop	1	
S601	SFDSSS5GL13S	SFDSSS5GL13P	Power	1	△
TRANSFORMER					
T1	SLT60EU7B	SLT66DTL3A [M]	Power Source	1	△
T1	SLT60E31C	SLT66DT14C [MC]	Power Source	1	△
T1	SLTF5900	SLT66DTE13A [Other areas]	Power Source	1	△

Ref. No.	Change of Part No. SL-1200MK2 (Before Change)	→ SL-1200MK2/1210MK2 (After Change)	Part Name & Description	Per Set (Pcs.)	Remarks
RESISTORS					
R4	ERD25FJ561	ERD25FJ471	Carbon, 1/4W, 470Ω	1	Ⓢ
R209	ERD25TJ154	ERD25TJ334	Carbon, 1/4W, 330kΩ	1	Ⓢ
R211	ERD25FJ103	ERD25FJ472	Carbon, 1/4W, 4.7kΩ	1	Ⓢ
R212	ERD25FJ121	ERD25FJ151	Carbon, 1/4W, 150Ω	1	Ⓢ
R222	Addition	ERD25FJ391	Carbon, 1/4W, 390Ω	1	Ⓢ
R301	ERO25CKF3301	ERO25CKF2701	Metal Film, 1/4W, 2.7kΩ	1	Ⓢ
R304	ERD25FJ152	ERD25FJ561	Carbon, 1/4W, 560Ω	1	Ⓢ
R401	Addition	ERD50FJ152	Carbon, 1/2W, 1.5kΩ	1	Ⓢ
R601	ERD25FJ4R7	ERD50FJ4R7	Carbon, 1/2W, 4.7Ω	1	△ Ⓢ
CAPACITORS					
C5, 6	Addition	ECQM1223KZ	Polyester, 125V, 0.022μF	1	△
C104 ~ 107	ECQM1H104KZ	ECQM1H104JZ	Polyester, 50V, 0.1μF	4	Ⓢ
C109, 110	ECQM1H104KZ	ECQM1H104JZ	Polyester, 50V, 0.1μF	2	Ⓢ
C111	ECQM1H562KZ	ECQM1H562JZ	Polyester, 50V, 0.0056μF	1	Ⓢ
C204	ECQM1H473KZ	ECQM1H473JZ	Polyester, 50V, 0.047μF	1	Ⓢ
C210	ECQM1H224KZ	ECQM1H224JZ	Polyester, 50V, 0.22μF	1	Ⓢ
C211	ECQM1H473KZ	ECQM1H473JZ	Polyester, 50V, 0.047μF	1	Ⓢ
C217 ~ 219	Addition	ECKD1H104ZF	Ceramic, 50V, 0.1μF	1	Ⓢ
C301	ECQK1123FZ	ECQK1333GZ	Polyester, 125V, 0.033μF	1	
C302	ECQK1123FZ	ECQK1682GZ	Polyester, 125V, 0.0068μF	1	
C305	ECQM1H122KZ	ECQM1H122JZ	Polyester, 50V, 0.0012μF	1	Ⓢ
CABINET and CHASSIS PARTS					
9	SFUP122–12	Deletion	----------	0	
10	SFAC122–01	SFAC122–01	Cabinet (Silver)	1	○
		SFAC124S01	Cabinet (Black)	1	Ⓚ
25	SFXB122–02	SFXB122–06	Boss, Drive	1	
33	SFQA001–02	SFQA122–03	Spring	1	
36	SFUP025–01	SFUP122–16 [M, MC, PA, PE, PC]	Bracket, AC Cord	1	
	SFUP025X01	SFUP122X01 [Other areas]	Bracket, AC cord	1	
38	SFUP132–03	SFGC122–03	Cushion	2	
40	SFUP122–10	Deletion	----------	0	
42	SFKK122–03	SFKK122–03	Plate (Silver)	1	
		SFKK124S01	Plate (Black)	1	
48	SFAU122–01	SFAU122–02	Bottom Base	1	
48–1	Addition	SFAU122–03	Bottom Cover	1	
49	SFUP122–05	SFUP122–23	Supporter (A), Hinge	2	
50	SFUP122–04	SFUP122–24	Supporter (B), Hinge	2	
51	SFUM170–07	SFUMM02N04	Case, Hinge	2	
55	SFNN122M01	SFNN122M10 [M]	Name Plate	1	○
	SFNN122C01	SFNN122C10 [MC]	Name Plate	1	○
	SFNN122S01	SFNN122S10 [E]	Name Plate	1	○
	SFNN122L01	SFNN122G10 [EK, XL]	Name Plate	1	○
	SFNN122X01	SFNN122X10 [XA]	Name Plate	1	○
	Addition	SFNN122P10 [PA, PE]	Name Plate	1	○
	Addition	SFNN122P11 [PC]	Name Plate	1	○
	SFNN122N01	SFNN122N10 [Other areas]	Name Plate	1	○
	Addition	SFNN124S10 [E]	Name Plate	1	Ⓚ
	Addition	SFNN124Q10 [EG, EH]	Name Plate	1	Ⓚ
56	SFX0122–01	Deletion	----------	0	
57	SFX0122–02	Deletion	----------	0	
58	SFAT122–01A	SFATM02N01A	Hinge	1	

Ref. No.	Change of Part No. SL-1200MK2 (Before Change)	→ SL-1200MK2/1210MK2 (After Change)	Part Name & Description	Per Set (Pcs.)	Remarks
TONEARM PARTS					
62	SFPAM18201K	SFPAM18201K	Tonearm Ass'y (Silver)	1	○
		SFPAM18202K	Tonearm Ass'y (Black)	1	Ⓚ
79	SFPKB17201S	SFPKB17204E	Ring, Arm Base Operation	1	
82	SFGK132–01	SFGK132–01	Cap (Silver)	1	○
		SFGK133S01	Cap (Black)	1	Ⓚ
ACCESSORIES					
A1	SFNU122M01	SFNU122M06 [M]	Instruction Book	1	
	SFNU122C01	SFNU122C06	Instruction Book	1	
	SFNU122S01	SFNU122S01 [E]	Instruction Book	1	
	SFNU122G01	SFNU122G01 [EK]	Instruction Book	1	
	Addition	SFNU122P01 [PA, PE, PC]	Instruction Book	1	
	SFNU122X01	SFNU122X01 [Other areas]	Instruction Book	1	
A2	SFWE010	SFWE122–01	45 Adaptor	1	
PACKING PARTS					
P1	SFHP122C01	SFHP122C02 [MC, EF]	Carton Box (Silver)	1	○
	SFHP122M01	SFHP122M02 [Other areas]	Carton Box (Silver)	1	○
		SFHP124S02	Carbon Box (Black)	1	Ⓚ
P9	Addition	SPB1083	Polyethylene Bag, Accessories	2	
P10	Addition	SPJ15	Polyethylene Bag, Shell Weight	1	
P11	Addition	SFHZD03M01	Polyethylene Bag, Dust Cover	3	
P12	Addition	SFHZ122–01	Polyethylene Bag, 45 Adaptor	1	
P13	Addition	SPP189	Polyethylene Bag, Cords	2	

■ ADJUSTMENT POINTS

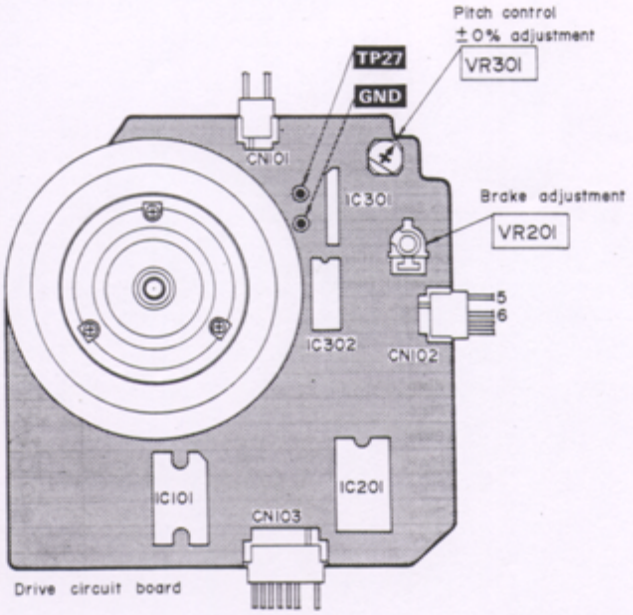

Fig. 3 (Abb. 3)

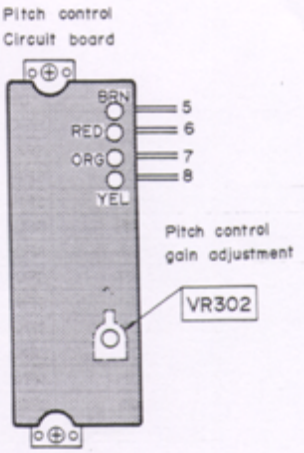

Fig. 4 (Abb. 4)

■ MEASUREMENTS AND ADJUSTMENTS — English

- **Conditions of set, and instruments used**

1. Remove the panel cover.
2. Remove the bottom cover (when adjusting the pitch control gain).
3. Frequency counter
4. Tester

	Adjustment	Connection	Parts adjusted	Procedure
1	Pitch control ± 0% adjustment	Frequency counter (+) – TP27 (–) – Earth point	VR301 (Fig. 3)	1. Connect the frequency counter and turn the power supply ON. 2. Set the pitch control knob to "0". (Indicator lights up.) 3. Adjust VR301 so that the frequency is 262.08 kHz ± 0.05 kHz.
2	Pitch control gain adjustment	Tester (+) – CN102 terminal ⑤ (–) – CN102 terminal ⑥	VR302 (Fig. 4)	1. Set the pitch control knob to "0". 2. Pull out the connector CN102 of drive P.C.B. 3. Connect the tester to terminals,⑤and⑥of connector CN102 on the pitch control P.C.B. side. 4. Adjust VR302 so that the resistance value of the tester is 2.7 kΩ ± 0.1 kΩ.
3	Brake adjustment	———	VR201 (Fig. 3)	1. Adjust VR201 so that the rotation at 33 r.p.m. stops within the angle of 90° ~120° after depressing the stop button.

■ MESSUNGEN UND JUSTIERUNGEN — Deutsch

- **Zustand des Gerätes und zu verwendende Instrumente**

1. Die Abdeckplatte entfernen.
2. Die Bodenadbeckung entfernen (wenn die Drehzahlregelungs-Verstärkung justiert werden soll).
3. Frequenzzähler
4. Prüfgerät

	Justierung	Anschlüsse	Zu justierender Teile	Vorgehen
1	± 0%-Justierung des Drehzahlreglers	Frequenzzähler (+) – TP27 (–) – Massepunkt	VR301 (Abb. 3)	1. Frequenzzähler anschließen und Netzschalter einschalten. 2. Drehzahlreglerknopf auf "0" stellen. (Anzeige leuchtet auf.) 3. VR301 so justieren, daß die Frequenz 262,08 kHz ± 0,05 kHz beträgt.
2	Justierung der Drehzahlregelungs-Verstärkung	Prüfgerät (+) – CN102 Anschluß ⑤ (–) – CN102 Anschluß ⑥	VR302 (Abb. 4)	1. Den Drehzahlreglerknopf auf "0" einstellen. 2. Steckverbindung CN102 von der Antriebsplatine hrausziehen. 3. Prüfgerät an Anschlüsse⑤und⑥der Steckverbindung CN102 auf der Drehzahlreglerseite der Platine anschließen. 4. VR302 so justieren, daß der Widerstandswert des Prüfgerätes 2,7 kΩ ± 0,1 kΩ beträgt.
3	Bremsjustierung	———	VR201 (Abb. 3)	1. VR201 so justieren, daß die Rotation bei 33 UPM innerhalb 90° ~ 120° nach Drücken der Stop-Taste stoppt.

onearm Parts

■ RESISTORS AND CAPACITORS

otes:
1. Part numbers are indicated on most mechanical parts. Please use this part number for parts orders.
2. Important safety notice: Components identified by ⚠ mark have special characteristics important for safety. When replacing any of these components use only manufacturer's specified parts.
3. The "Ⓢ" mark is service standard parts and may differ from production parts.
4. Bracketed indications in Ref. No. colum specify the area. Parts without these indications can be used for all area.
5. The unit of resistance is Ω (ohm). K = 1000Ω, M = 1000kΩ
6. The unit capacitance is μF (microfarad). P = 10^{-6} μF

Areas

* [M] is available in the U.S.A.
* [MC] is available in Canada.
* [E] is available in Switzerland and Scandinavia.
* [EK] is available in United Kingdom.
* [XL] is available in Australia.
* [EG] is available in F.R. Germany.
* [EB] is available in Belgium.
* [EH] is available in Holland.
* [EF] is available in France.
* [Ei] is available in Italy.
* [XA] is available in Southeast Asia, Oceania, Africa, Middle Near East and Central South America.
* [PA] is available in far East PX.
* [PE] is available in European Military.
* [PC] is available in European Audio Club.

Numbering System of Resistor

Example

ERD	25	F	J	101
Type	Wattage	Shape	Tolearance	Value
ERX	2	AN	J	2R2
Type	Wattage	Shape	Tolerance	Value

Resistor type	Wattage	Tolerance
ERD: Carbon	25 : 1/4W	F : ±1%
ERG: Metal Oxide	50 : 1/2W	J : ±5%
ERO: Metal Film	1A : 1W	
ERX: Metal Film	2A : 2W	

Numbering System of Capacitor

Example

ECKD	1H	102	Z	F
Type	Voltage	Value	Tolerance	Peculiarity
ECEA	50	M	R47	R
Type	Voltage	Reculiarity use	Value	Special use

Capacitor Type		Voltage		Tolearnce	
ECEA	: Electrolytic	OJ	: 6.3V	J	: ±5%
ECEB	: Electrolytic	1C	: 16V	K	: ±5%
ECCD	: Ceramic	1E	: 25V	M	: ±20%
ECQM	: Polyester	1H	: 50V	Z	: +80%,−20%
ECQU	: Polyester	1	: 100V		
ECQF	: Polyester	1A	: 125V		
ECNC	: Polyester	4A	: 400V		

Ref. No.		Part No.	Value
RESISTORS			
R1	Ⓢ	ERD25FJ562	5.6K
R2	Ⓢ	ERD25FJ682	6.8K
R3	Ⓢ	ERD25FJ272	2.7K
R4,5	Ⓢ	ERD25FJ471	470
R101	Ⓢ	ERD25FJ103	10K
R102	Ⓢ	ERX1ANJ4R7	4.7
R103	Ⓢ	ERD25FJ472	4.7K
R104	Ⓢ	ERD25TJ473	47K
R105	Ⓢ	ERD25FJ103	10K
R106	Ⓢ	ERD25FJ150	15
R107	Ⓢ	ERX1ANJ1R5	1.5
R108	Ⓢ	ERD25FJ103	10K
R109,110	Ⓢ	ERX1ANJ4R7	4.7
R201	Ⓢ	ERG1ANJ561	560
R202	Ⓢ	ERD25FJ103	10K
R203	Ⓢ	ERD25FJ470	47
R204	Ⓢ	ERD25FJ272	2.7K
R205	Ⓢ	ERD25TJ124	120K
R206	Ⓢ	ERD25TJ183	18K
R207	Ⓢ	ERD25TJ563	56K
R208	Ⓢ	ERD25TJ224	220K
R209	Ⓢ	ERD25TJ334	330K

Ref. No.		Part No.	Value
R210	Ⓢ	ERD25TJ183	18K
R211	Ⓢ	ERD25FJ472	4.7K
R212	Ⓢ	ERD25FJ151	150
R213	Ⓢ	ERD25FJ122	1.2K
R214	Ⓢ	ERD25TJ223	22K
R215	Ⓢ	ERD25FJ472	4.7K
R216	Ⓢ	ERD25TJ154	150K
R217	Ⓢ	ERD25TJ223	22K
R218	Ⓢ	ERD25FJ102	1K
R219	Ⓢ	ERD25FJ332	3.3K
R220	Ⓢ	ERD25FJ221	220
R221	Ⓢ	ERD25FJ471	470
R222	Ⓢ	ERD25FJ391	390
R301	Ⓢ	ERD25CKF2701	2.7K
R302	Ⓢ	ERD25FJ471	470
R303	Ⓢ	ERD25FJ822	8.2K
R304	Ⓢ	ERD25FJ561	560
R305	Ⓢ	ERD25FJ181	180
R306	Ⓢ	ERD25TJ223	22K
R307	Ⓢ	ERD25FJ272	2.7K
R401	⚠ Ⓢ	ERD50FJ152	1.5K
R601	⚠ Ⓢ	ERD50FJ4R7	4.7

Ref. No.		Part No.	Value
CAPACITORS			
C1		ECEB1HU471	470
C2		ECEA1EU330	33
C3		ECEA1EU220	22
C5,6		ECQM1223KZ	0.022
C101,102		ECEA1EU330	33
C103		ECEA1EU330	33
C104,105	Ⓢ	ECQM1H104JZ	0.1
C106,107	Ⓢ	ECQM1H104JZ	0.1
C108		ECEA1EU101	100
C109,110	Ⓢ	ECQM1H104JZ	0.1
C111	Ⓢ	ECQM1H562JZ	0.0056
C112		ECEA1HU4R7	4.7
C201		ECEA1CU330	33
C202,203		ECEA1HU010	1
C204	Ⓢ	ECQM1H473JZ	0.047
C205		ECEA0JU221	220
C206		ECEA1HU010	1
C207	Ⓢ	ECCD1H101K	100P
C208	Ⓢ	ECCD1H220K	22P
C209		ECEA1CU101	100

Ref. No.		Part No.	Value
C210	Ⓢ	ECQM1H224JZ	0.22
C211	Ⓢ	ECQM1H473JZ	0.047
C212		ECEA1HU3R3	3.3
C213	Ⓢ	ECCD1H471K	470P
C214		ECEA1CU101	100
C215		ECEA1HU010	1
C216		ECEA1CU470	47
C217,218		ECKD1H104ZF	0.1
C219		ECKD1H104ZF	0.1
C301		ECQK1333GZ	0.033
C302		ECQK1682GZ	0.0068
C303		ECEA1HU010	1
C304		ECEA1CU100	10
C305	Ⓢ	ECQM1H122JZ	0.0012
C306		ECEA1HU010	1
C601 (M)	⚠	ECQF1A473MD	0.047
C601 (MC)	⚠	ECQU1A47ME	0.047
C601 (Other area)	⚠	ECNC4A473M	0.047

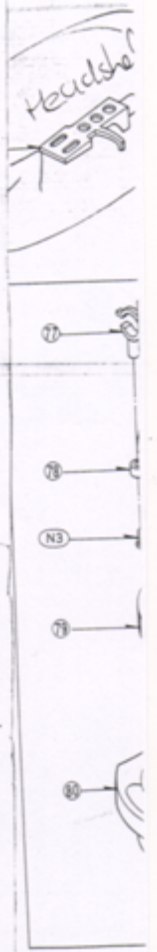

■ REPLACEMENT PARTS LIST

Notes:
1. Part numbers are indicated on most mechanical parts. Please use this part number for parts orders.
2. Important safety notice: Components identified by ⚠ mark have special characteristics important for safety. When replacing any of these components use only manufacturer's specified parts.
3. Bracketed indications in Ref. No. columns specify the area. Parts without these indications can be used for all areas.
4. The "Ⓢ" mark is service standard parts and may differ from production parts.
5. The parenthesized numbers in the column of description stand for the quantity per set.
6. Ⓚ-marked parts are used only for SL-1210MK2 (black type). And ○-marked parts are used for SL-1200MK2 (silver type).
7. Parts other than Ⓚ-and ○-marked are used for both SL-1210MK2 and SL-1200MK2.

Areas

- * [M] is available in the U.S.A.
- * [MC] is available in Canada.
- * [E] is available in Switzerland and Scandinavia.
- * [EK] is available in United Kingdom.
- * [XL] is available in Australia.
- * [EG] is available in F.R. Germany.
- * [EB] is available in Belgium.
- * [EH] is available in Holland.
- * [EF] is available in France.
- * [EI] is available in Italy.
- * [XA] is available in Southeast Asia, Oceania, Africa, Middle Near East and Central South America.
- * [PA] is available in far East PX.
- * [PE] is available in European Military.
- * [PC] is available in European Audio Club.

Ref. No.	Part No.	Description
INTEGRATED CIRCUITS		
IC101	AN6675	Turntable Drive
IC201	AN6680	Turntable Control
IC301	AN6682	Pitch Control
IC302	MN4011B	NAND Gate
TRANSISTORS		
Q1	2SD1265	Regulator
Q2,3	2SD637	Regulator
Q201 Ⓢ	2SC1846-R	Regulator
Q202	2SD637	LED Driver
Q203 Ⓢ	2SC1328-T	FG Amp.
DIODES		
D1 ⚠	SVDS1RBA20Z	Rectifier
D2	MA1051	5.1V Zener
D201,202	SVDPR3902S-9	Speed Indicator
D203~206	SVDSLH54VT3	Strobe
D204A	MA162A	Switching
D301	MA1051	5.1V Zener
D401	SVDGL-9NG2	Pitch Indicator

Ref. No.	Part No.	Description
CRYSTAL		
X201	SVQMS4193	4.193MHz Oscillator
VARIABLE RESISTORS		
VR201 Ⓢ	EVTS3MA00B54	Brake Adjustment,50kΩⓑ
VR301	EVMH1GA00B23	Pitch Control±0% Adjustment,2kΩⓑ
VR302 Ⓢ	EVTS3MA00B54	Pitch Control Gain Adjustment,50kΩⓑ
VR303	SFDZ122N11 X	Pitch Control
SWITCHES		
S201,202	EVQP5R04K	Speed Selector
S203	SFDSSS01GL13	Stort/Stop
S401	SFDSD2MSL-C	Stylus-Illuminator
S601 ⚠	SFDSSS5GL13P	Power
S602 Except for (M,MC) ⚠	SFDSHXW01317	Voltage Selector

Ref. No.	Part No.	Description
LAMP		
PL1 ⚠	SFDN122-01 X	Stylus Illuminator
TRANSFORMER		
T1 (M) ⚠	SLT66DTL3A	Power Source
T1 (MC) ⚠	SLT66DT14C	Power Source
T1 (Other areas) ⚠	SLT66DTE13E	Power Source
FUSES		
F1 (MC) ⚠	XBA1F12NU14	125V,1.2A
F1 Except for (M,MC) ⚠	XBA2C025T1A	250V,T250mA
F2 Except for (M,MC) ⚠	XBA2C10TR0	250V,T1A

LAMP

Fader.

Shell holds circuits

Ref. No.
CHABIN
1
2
3
4
5
6
7
8
10
10
11
12
13
14
15
16
17
18
19
20
21
22
23
24
25
26
27
28
29
30
31
32
33
34
35 (M,MC PE,I
35 (EK)
35 (Other areas)
36 (M,MC PE,I
36 (Other areas)
37 (M,MC
37 (EK)
37 (XL)
37 (PA,PE,I
37 (Other ar
38
39
41
42
42
43
44
45
46
48
48-1
49
50
51

SL-1200MK2/1210MK2

Ref. No.	Part No.	Description	
CHABINET AND CHASSIS PARTS			
1	SFAD122-01A	Dust Cover	(1)
2	SFTG172-01	Turntable Mat	(1)
3	SFTE172-01	Turntable Platter Ass'y	(1)
4	SFUM172-05	Cover, Cabinet	(1)
5	SFMGQ20-01	Cover, Drive Coil	(1)
6	SFMGS20-31A	Drive Coil Ass'y	(1)
7	SFMZ172-01E	FG Coil Ass'y	(1)
8	SFMZQ20-01A	Shaft Ass'y, Turntable	(1)
10 ○	SFAC122-01	Cabinet (Silver)	
10 ®	SFAC124S01	Cabinet (Black)	(1)
11	SFUM172-04	Ornament, Stylus Illuminator	(1)
12	SFKT122-01	Knob, Power Switch	(1)
13	SFKK122-01E	Case, Strobe Illuminator	(1)
14	SFKT015-06	Button, Start/Stop	(1)
15	SFQA122-01	Spring, Start/Stop Button	(1)
16	SFUM122-01	Base, Operation	(1)
17	SFKT015-01E	Button, Speed 33	(1)
18	SFDJ122-02E	Connector, 7pin	(1)
19	SFGZ122-01	Spacer, Rubber	(1)
20	SFYB-5-32	Ball, Switch Cam	(1)
21	SFQA520-01	Spring, Switch Cam	(1)
22	SFUM122-03	Cam, Power Switch	(1)
23	SFUM015-11	Spacer, Speed Indicator	(2)
24	SFKK172-01	Cover,Stylus Illuminator	(1)
25	SFXB122-06	Boss, Drive	(1)
26	SFQA172-01	Spring, Drive Boss	(1)
27	SFXJ172-01	Pin, Lock Canceler	(1)
28	SFUP122-02E	Bracket, Stylus Illuminator	(1)
29	SFUP122-03	Plate, Lock Operation	(1)
30	SFDJ122-03E	Connector, 3pin	(1)
31	SFX0172-01	Pin, Guide	(1)
32	SFQA520-01	Spring, Lock Canceler	(1)
33	SFQA122-02	Spring, Lock Operation Plate	(1)
34	SFXJ172-05	Pin, Lock Operation Plate	(1)
35 [M,MC,PA PE,PC]	SFHK040L	Clamper, AC Cord	(1)
35 [EK]	SFSR-5N-4	Clamper, AC Cord	(1)
35 [Other areas]	SFSR-4N-4	Clamper, AC Cord	(1)
36 [M,MC,PA PE,PC]	SFUP122-16	Bracket, AC Cord	(1)
36 [Other areas]	SFUP122X01	Bracket, AC Cord	(1)
37 △⑤ [M,MC]	RJA9Y	AC Cord	(1)
37 [EK] △⑤	QFC1205M	AC Cord	(1)
37 [XL] △⑤	SJAG23	AC Cord	(1)
37 △⑤ [PA,PE,PC]	SJA83	AC Cord	(1)
37 △⑤ [Other areas]	SJA88	AC Cord	(1)
38	SFGC122-03	Rubber, Power Transformer	(2)
39	SFGC122-01	Cushion, Power Transformer	(3)
41	SFKT122-02	Knob, Pitch Control	(1)
42 ○	SFKK122-03	Ornament (Silver), Pitch Control	(1)
42 ®	SFKK124S01	Ornament (Black), Pitch Control	(1)
43	SFUZ122-01	Felt	(1)
44	SFUP122-09	Holder, LED	(1)
45	SFUP122-01	Bracket, Pitch Control	(1)
46	SFDJ122-01E	Connector, 4pin	(1)
48	SFAU122-02	Bottom Base	(1)
48-1	SFAU122-03	Bottom Cover	(1)
49	SFUP122-23	Supporter (A),Hinge	(2)
50	SFUP122-24	Supporter (B), Hinge	(2)
51	SFUMM02N04	Case, Hinge	(2)

Ref. No.	Part No.	Description	
52	SFGC122-02E	Insulator	(4)
54	SFKT015-02E	Button, Speed 45	(1)
55 [M] ○	SFNN122M10	Name Plate	(1)
55 [MC] ○	SFNN122C10	Name Plate	(1)
55 [E] ○	SFNN122S10	Name Plate	(1)
55 [EK,XL] ○	SFNN122G10	Name Plate	(1)
55 [XA] ○	SFNN122X10	Name Plate	(1)
55 [PA,PE] ○	SFNN122P10	Name Plate	(1)
55 [PC] ○	SFNN122P11	Name Plate	(1)
55 [Other areas] ○	SFNN122N10	Name Plate	(1)
55 [E] ®	SFNN124S10	Name Plate	(1)
55 [EG,EH] ®	SFNN124Q10	Name Plate	(1)
58	SFATM02N01A	Hinge	(2)
59	SFUP122-25	Plate,Power transformer	(1)
TONEARM PARTS			
61	SFPCC31001K	Headshell	(1)
62 ○	SFPAM18201K	Tonearm Ass'y (Silver)	(1)
62 ®	SFPAM18202K	Tonearm Ass'y (Black)	(1)
63	SFPWG17201K	Balance Weight	(1)
64	SFPRT18201K	Lift Ass'y	(1)
65	SFPZB17202	Knob, Arm Base Lock	(1)
66	SFQA829-03	Spring, Lift Ass'y	(1)
67	SFPAB13202	Knob, Arm Lift	(1)
68	SFPJL18202K	Oil Damper	(1)
70	SFPZB12203	Plate, Arm Base Cover	(1)
71	SFUM170-06	Spacer, Phono Cord	(1)
72	SEPZB12204	Clamper, Phono Cord	(1)
73	SFPAB18201K	Tonearm Fixing Plate	(1)
74	SFPZB12201K	Plate	(1)
75	SFDH122-05	Phono Cord	(1)
76	SFEL028-01E	Ground Wire	(1)
77	SFPRT17201K	Arm Rest	(1)
78 ○	SFPKD17203	Arm Base (Silver)	(1)
78 ®	SFPKD17205	Arm Base (Black)	(1)
79	SFPKB17204E	Ring,Arm Base Operation	(1)
80	SFPKD12201	Bracket, Arm Base	(1)
81	SFPAB17206	Knob, Anti-Skating	(1)
82 ○	SFGK132-01	Cap (Silver)	(1)
82 ®	SFGK133S01	Cap (Black)	(1)
SCREW,NUT AND WASHERS			
N1 ⑤	XTN3+8BFZ	Screw	(5)
N2	SFXGQ20-02	Screw	(3)
N3 ⑤	XTN3+8B	Screw	(8)
N4 ⑤	XWG3	Washer	(10)
N5 ⑤	XTN26+6B	Screw	(3)
N6 ⑤	XTV3+8BFN	Screw	(8)
N7	SFXG172-01	Screw	(3)
N8	XTN3+5J	Screw	(2)
N9	SFXW172-03	Washer	(1)
N10	SFPEW11003	Washer	(6)
N11 ⑤	XWE3E10	Washer	(3)
N12 ⑤	XWA3B	Washer	(8)
N13 ⑤	XSN3+10S	Screw	(3)
N14	SFXW910J02	Washer	(1)
N15 ⑤	XTN3+10B	Screw	(5)
N16 ⑤	XTN2+10B	Screw	(1)
N17 ⑤	XUC3FT	Circlip	(2)
N18	XSN17+3FY	Screw	(1)
N19 ⑤	XUC2FT	Circlip	(1)
N20 ⑤	XUC25FT	Circlip	(1)
N21 ⑤	XSN3+14S	Screw	(1)
N22	RTW-12	Circlip	(1)
N23 ⑤	XSN2+10	Screw	(2)
N24 ⑤	XSN3+6S	Screw	(2)
N25 ⑤	XTN3+6B	Screw	(5)
N26	XTWS3+14TFZ	Screw	(6)
N27	SFXG122-02	Screw	(1)
N29	SFXG122-01	Screw	(4)
N30	XTN3+14QFZ	Screw	(6)

Ref. No.	Part No.	Description	
N31 ⑤	XWG3FZ	Washer	(6)
N32 ⑤	XSN3+14BVS	Screw	(4)
N33 ⑤	XWA3BFZ	Washer	(4)
N34	SFXG829-1	Screw	(1)
N35 ⑤	XSN3+8S	Screw	(2)
N36 ⑤	XUC5FT	Circlip	(1)
N37	SFPEV17202	Screw	(3)
N38 ⑤	XTN3+25B	Screw	(1)
N39	SFPEW1100	Washer	(1)
N40 ⑤	XSN3+6BVS	Screw	(4)
N41 ⑤	XWC3BFZ	Washer	(1)
N42 ⑤	XSN3+12BVS	Screw	(2)
N43 ⑤	XWG3FZ	Washer	(2)
N44	SFXW701-02	Washer	(1)
N45	SFPEW00705	Washer	(4)
N46	XTW26+5E	Screw	(1)
ACCESSORIES			
A1 [M]	SFNU122M06	Instruction Book	(1)
A1 [MC]	SFNU122C06	Instruction Book	(1)
A1 [E,EB,EC]	SFNU122S01	Instruction Book	(1)
A1 [EK]	SFNU122G01	Instruction Book	(1)
A1 [PA, PE,PC]	SFNU122P01	Instruction Book	(1)
A1 [Other areas]	SFNU122X01	Instruction Book	(1)
A2	SFWE010	45 Adaptor	(1)
A3	SFPEN3302	Nut,Cartridge	(2)
A4	SFPEW9601	Washer,Cartridge	(2)
A5	SFCZV8801	Screw,Cartridge	(2)
A6	SFPEV9801	Screw,Cartridge	(2)
A7	SFK0135-01	Overhang Gauge	(1)
A8	SFPZB3501	Shell Weight	(1)
A9 △ [XA] Only	SFDKI19118	2pin Plug	(1)
A10	SFPWG17202	Sub-weight	(1)
A11 △ [PA,PE, PC] Only	QJP0603S	Adaptor, Gimens	
PACKING PARTS			
P1 [MC, EF] ○	SFHP122C02	Carton Box (Silver)	(1)
P1 [Other areas] ○	SFHP122M02	Carton Box (Silver)	(1)
P1 ®	SFHP124S02	Carton Box (Black)	(1)
P2	SFHH122-01	Pad, Front	(1)
P3	SFHH122-02	Pad, Rear	(1)
P4	SFHD122N05	Pad, Top	(1)
P5	SFHD122-02	Pad (A), Turntable	(1)
P6	SFHD122N06	Pad (B), Turntable	(1)
P7	SFYH60X60	Polyethylene Bag, Unit& Dust Cover	(2)
P8	SFYH40X45	Polyethylene Bag, Turntable	(1)
P9	SPB1083	Polyethylene Bag, Accessories	(3)
P10	SPJ15	Polyethylene Bag, Shell Weight	(1)
P11	SFHZD03M01	Cover Sheet, Dust Cover	(1)
P12	SFHZ122-01	Cover Sheet, 45Adaptor	(1)
P13	SPP189	Cover Sheet, Cords	(2)

■ EXPLODED VIEWS

- Cabinet and Chassis Parts

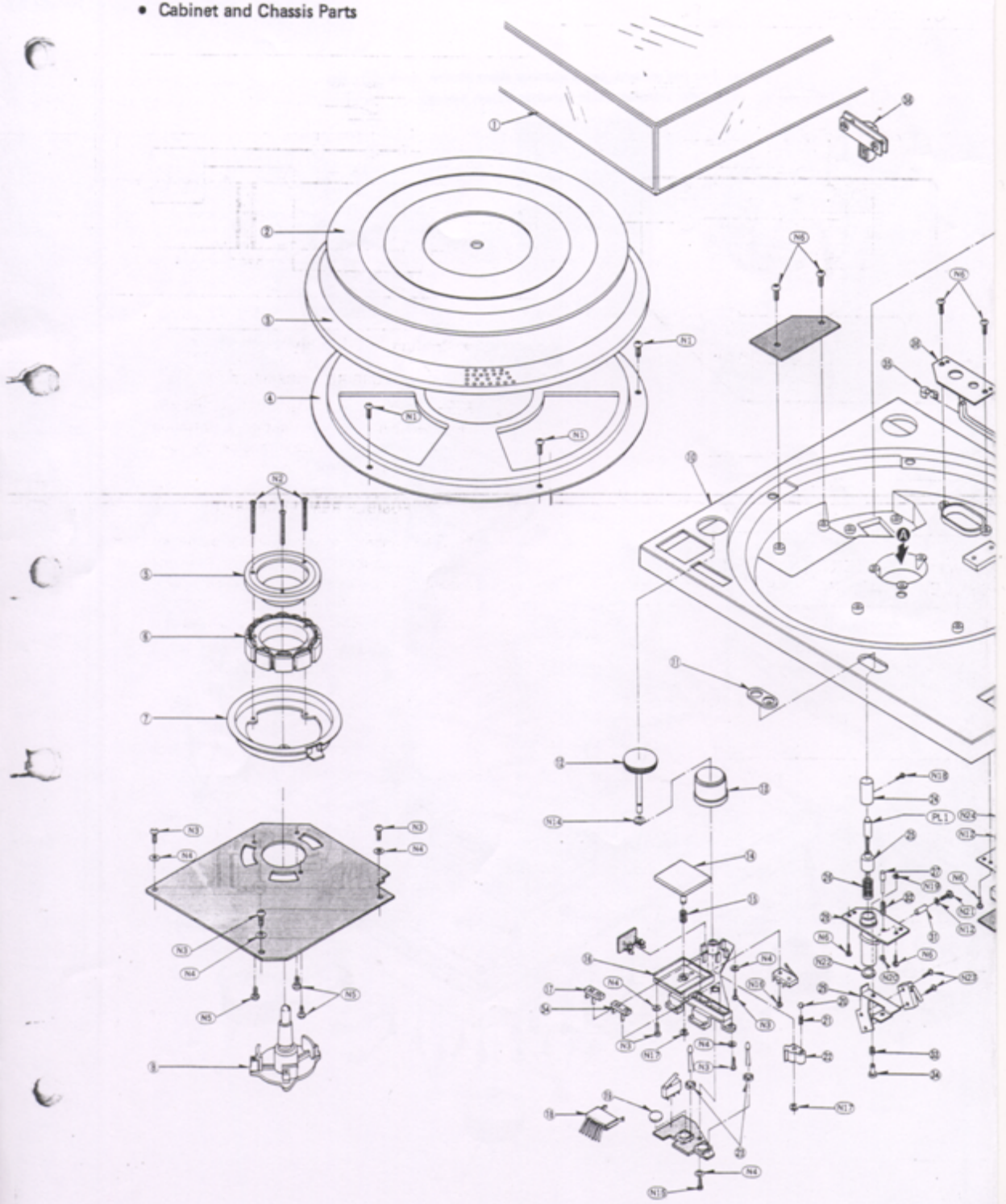

Note: For the set with serial number sheet change mark [E], the power transformer is fitted as shown below.

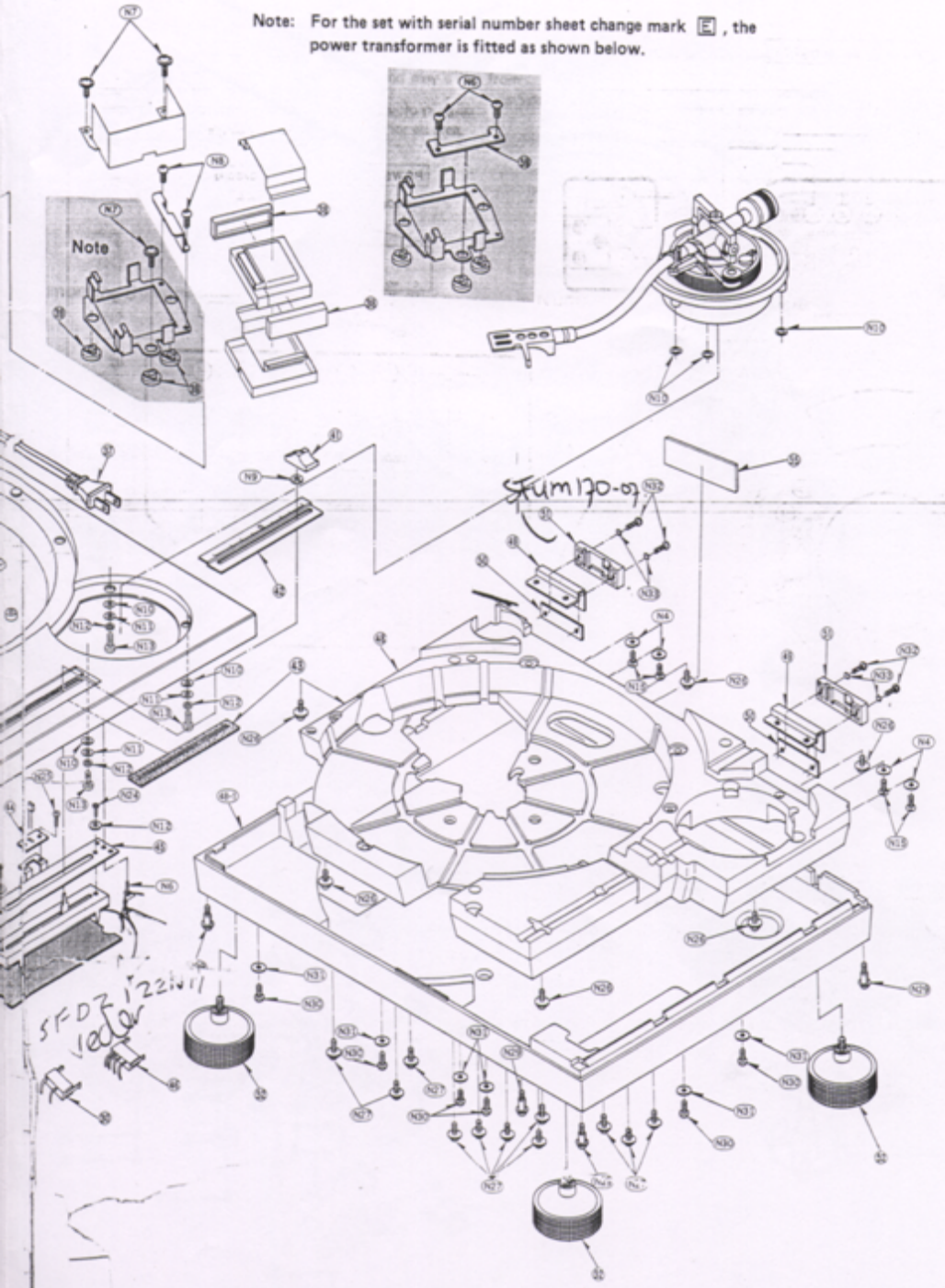

Tonearm P

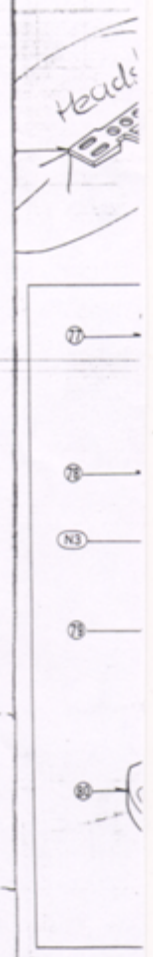

■ E

• Tonearm Parts

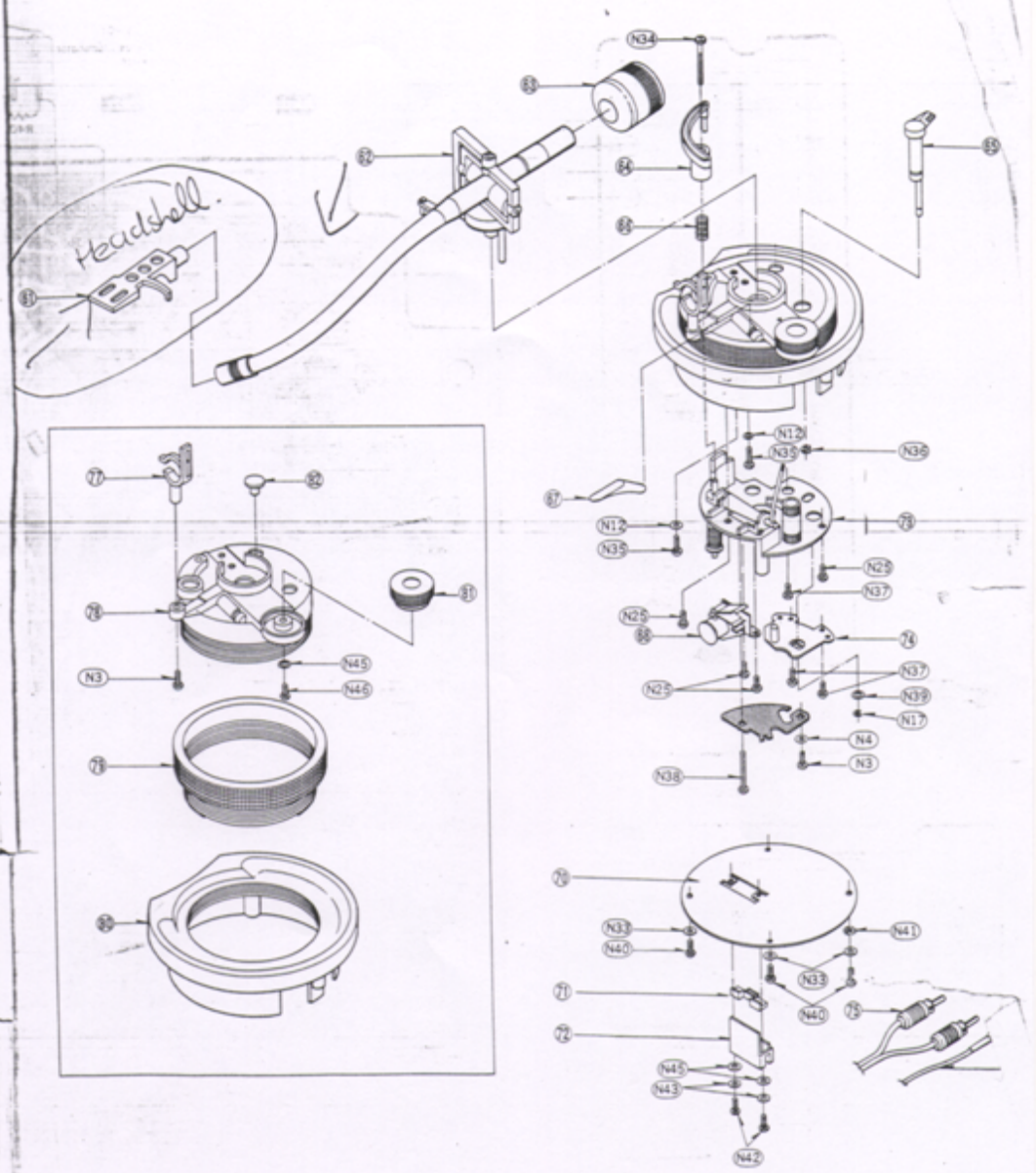

1200MK2/1210MK2

RSGN.

CIRCUIT BOARD AND WIRING CONNECTION DIAGRAM

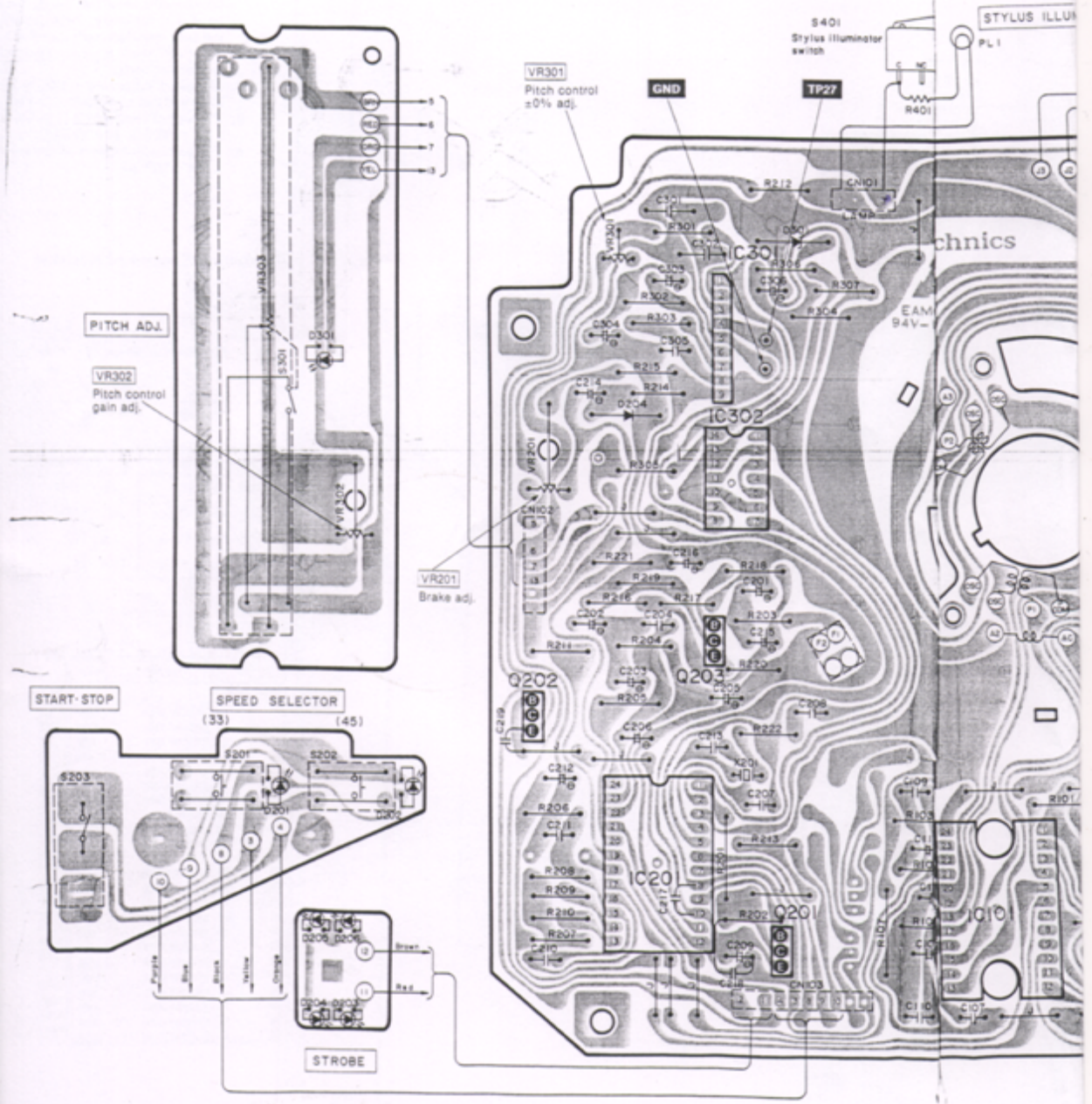

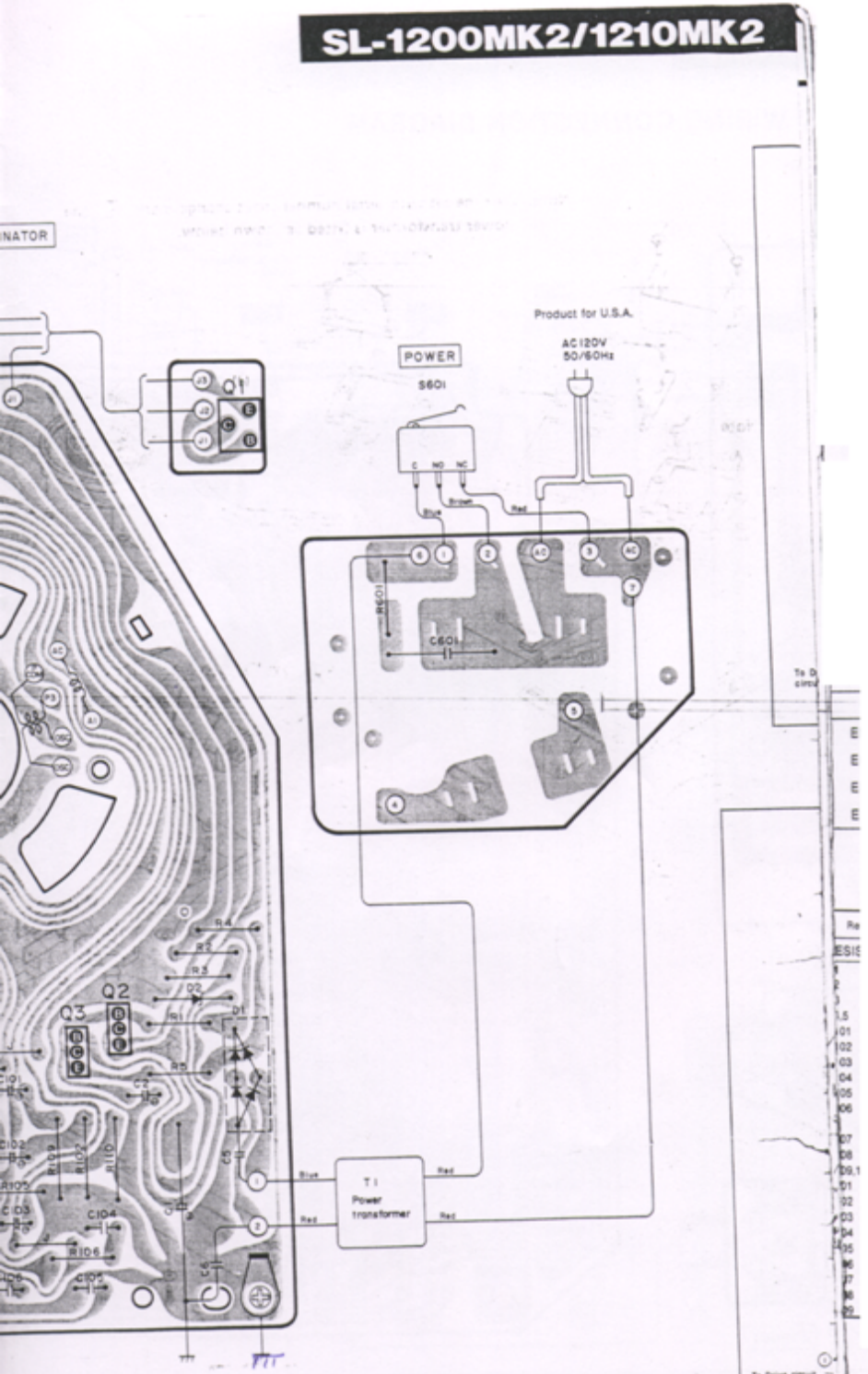
NATOR
Product for U.S.A.
AC 120V
50/60Hz
POWER
S601
C
NO
NC
Blue
Brown
Red
R601
C601
Q1
Q2
Q3
R4
R7
R3
D2
D1
R5
C5
C4
C104
R106
C102
R107
R110
Blue
Red
T1
Power
transformer
Red
Red
To Drive circuit board

SL-1200MK2/1210MK2

- Power source circuit

  * Product for Canada

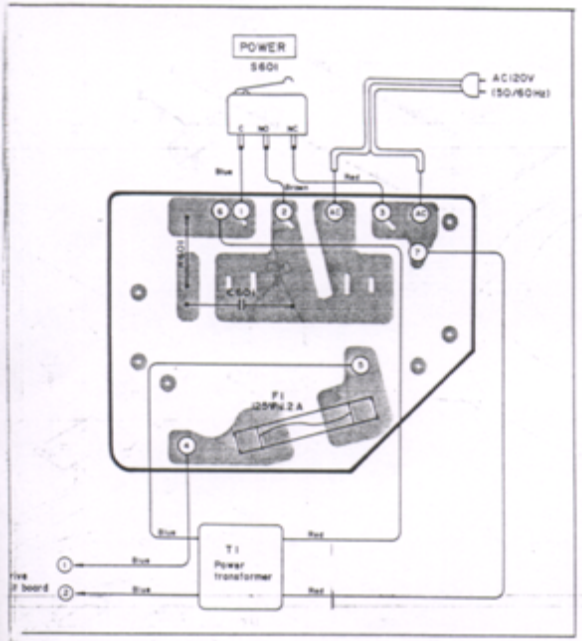

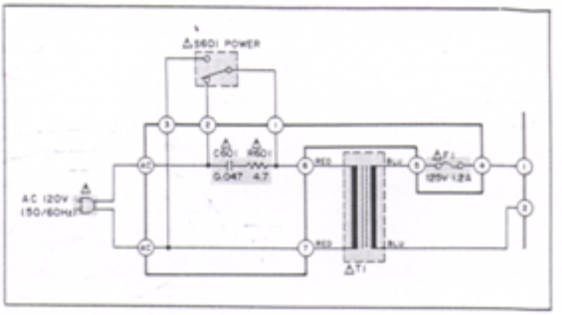

- Product for MC only

FUSE REPLACEMENT

Symbol located near the fuse indicates fast operating type. For continued protection against fire hazard, replace with same type fuse. Refer to the symbol for fuse rating.

FUSIBLE REMPLACEMENT

Le symbole qui se trouve près du fusible singifie un fusible à action rapide. Pour une protection contiue contre les risques d'incendie, n'utiliser que des fusibles du même type. Se rapporter au symbole pour la valeur des fusibles.

* Product for [E], [EK], [XL], [EG], [EB], [EH] [EF], [Ei], [XA], [PA], [PE] and [PC] areas

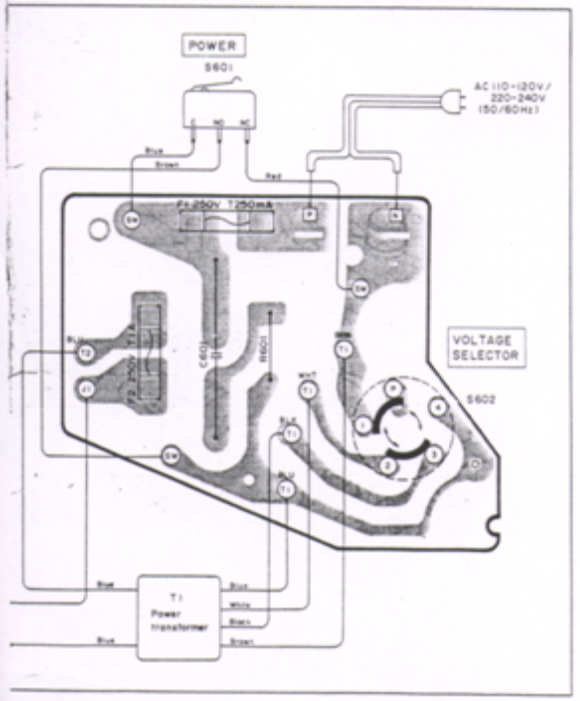

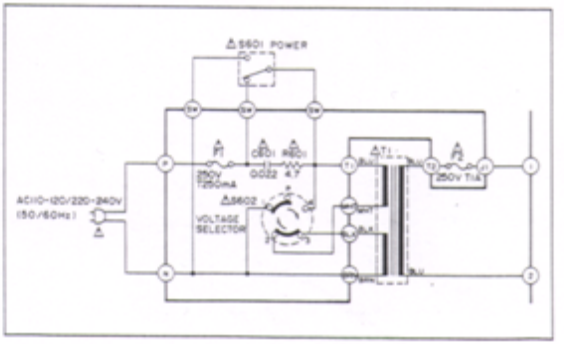

■ SCHEMATIC DIAGRAM

(This schematic diagram may be modified at any time with the development of new technology.)

Notes:

1. **S201, 202** : Speed selector switch.
2. **S203** : Start/stop switch.
3. **S301** : Pitch control reset switch in "**off**" position.
4. **S401** : Stylus illuminator switch in "**off**" position.
5. **S601** : Power switch in "**on**" position.
6. **S602** : Voltage selector in "**220 – 240**" position.
7. The voltage value, and waveforms are the reference voltage values of this unit measured by DC electronic voltmeter (high-impedance) and oscilloscope on the basis of chassis. Therefore, the voltage value and waveform may include some error due to the internal impedance of the tester or the measuring set.
   * [ ] is the voltage when turntable is in stop.
   * ( ) is the voltage when turntable is in rotation. (at 33 rpm)
8. ——— +B voltage lines.
9. Important safety notice.
   Components identified by ⚠ mark have special characteristics important for safety. When replacing any of these components, use only manufacturer's specified parts.
10. The part No. of diodes mentioned in the schematic diagram stand for production part No. Regarding the part No. with ✪ mark the production part No. are different from the replacement part No. Therefore, when placing an order for replacement part, please use the part No. in the replacement parts list.

IMPORTANT SAFETY NOTICE

The shaded area on this schematic diagram incorporates special features important for protection from fire and electrical shock hazards.
When servicing it is essential that only manufacturer's specified parts be used for the critical components in the shaded areas of the schematic.

- **Terminal guide of transistors, diodes and IC's**

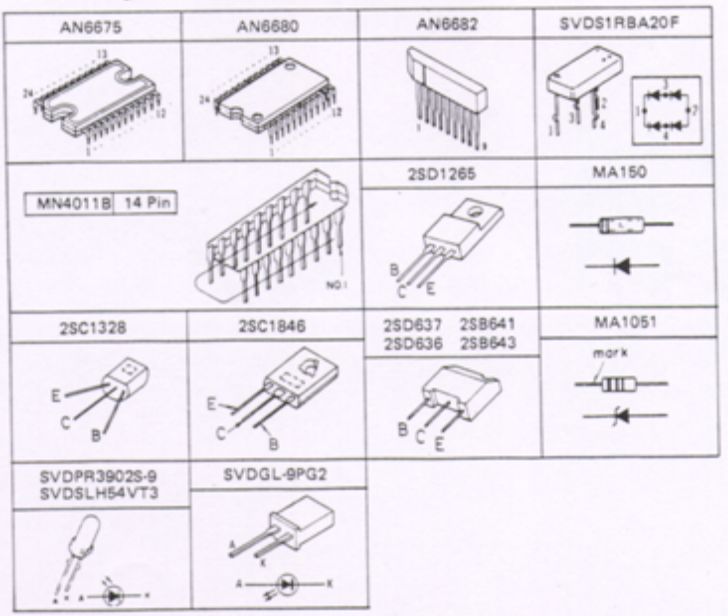

■ PACKING

1. Plase the unit (with cushions attached) as illustrated.
2. Fold the flaps according to the line marks.
3. Seal the top with adhesive tape.
   * Use gum tape or adhesive cloth tape of 50mm wide at least
4. For the edges, first fold the flap "a" and then flap "b", and staple. Remember to staple only flap "b". (Use 15 or 16mm staple)

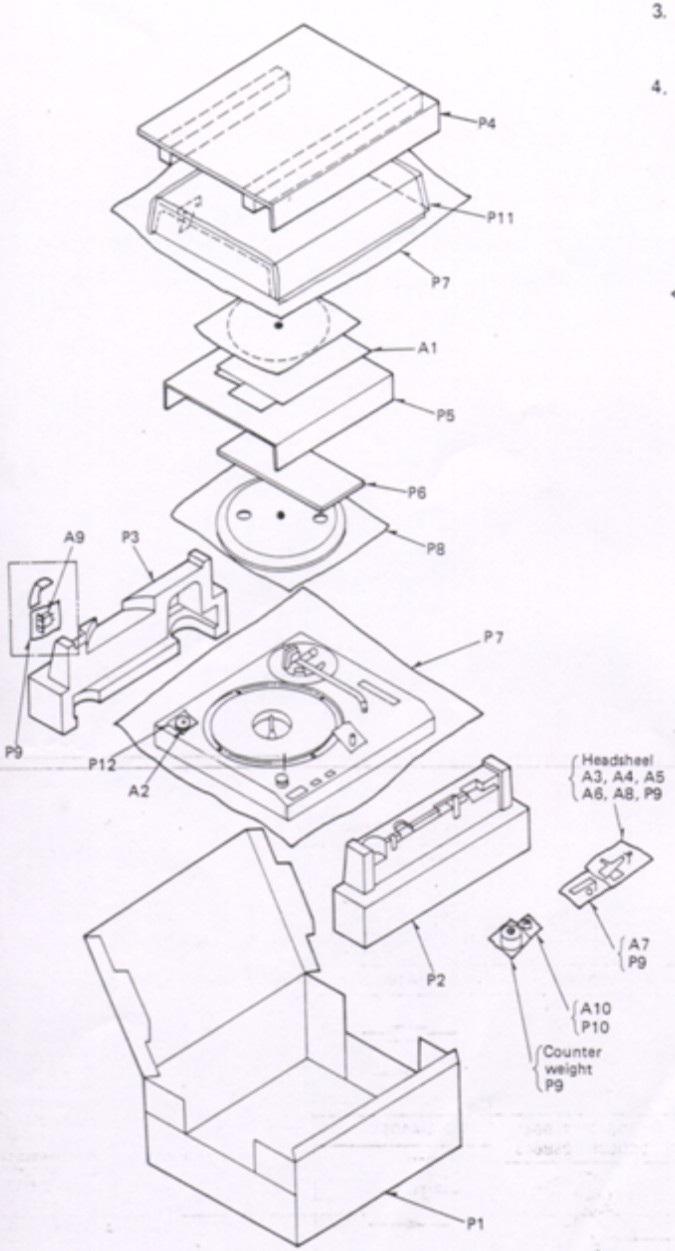

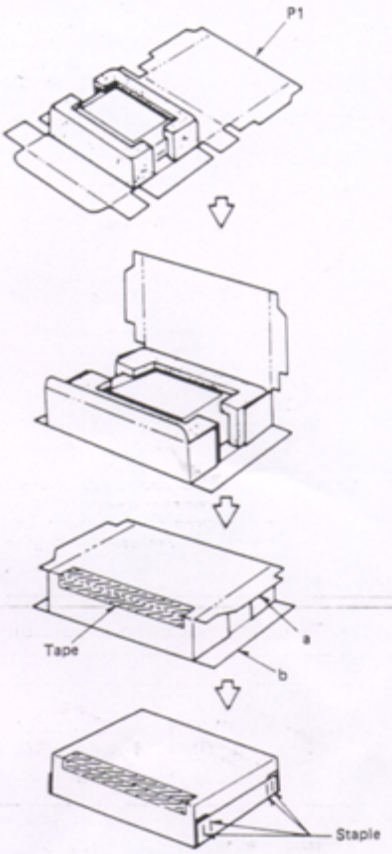

* Stapling positions are shown below.

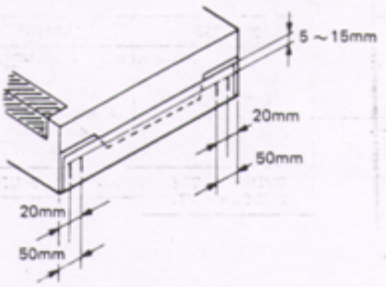

Printed in Japan
840412450 Ⓗ T.K.

■ BLOCK DIAGRAM

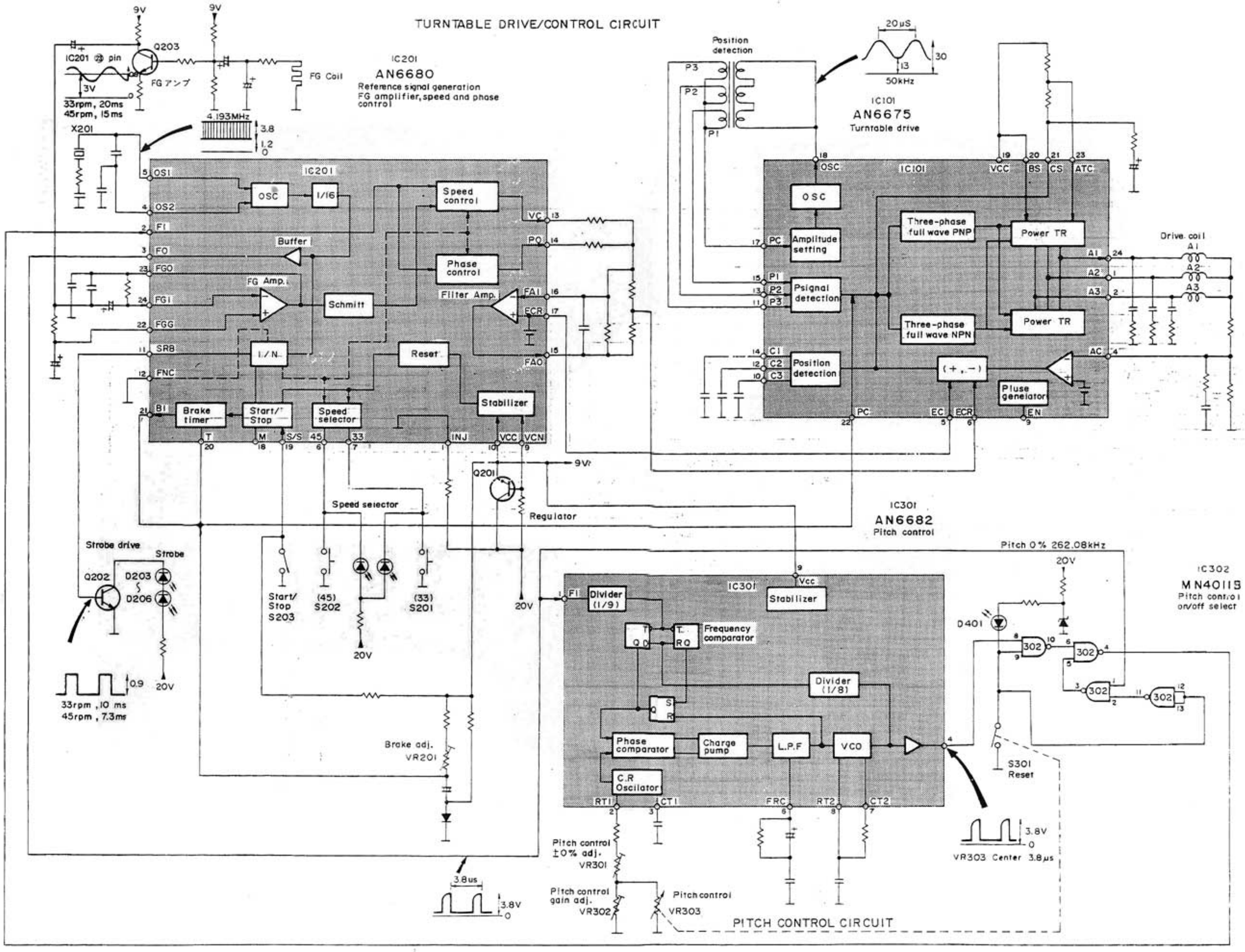

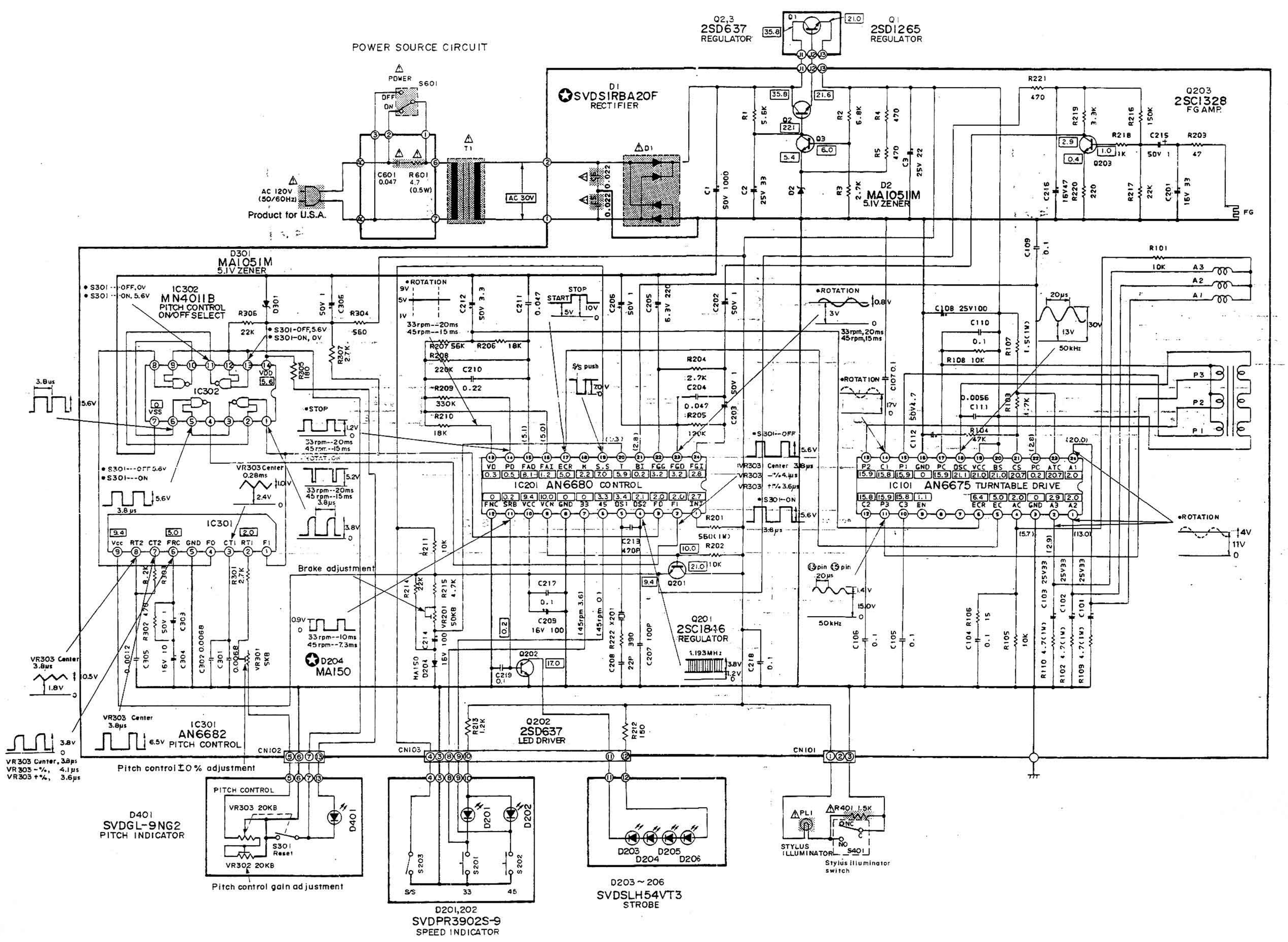
POWER SOURCE CIRCUIT
Q2,3
2SD637
REGULATOR
Q1
2SD1265
REGULATOR
POWER
S601
OFF
ON
C601
0.047
R601
4.7
(0.5W)
AC 120V
(50/60Hz)
Product for U.S.A.
T1
AC 30V
D1
SVDSIRBA20F
RECTIFIER
D2
MA1051M
5.1V ZENER
Q203
2SC1328
FG AMP.
FG
D301
MA1051M
5.1V ZENER
IC302
MN4011B
PITCH CONTROL
ON/OFF SELECT
•S301---OFF, 0V
•S301---ON, 5.6V
•S301-OFF, 5.6V
•S301-ON, 0V
•ROTATION
33rpm--20ms
45rpm--15ms
START
STOP
S/S push
•STOP
33rpm--20ms
45rpm--15ms
ROTAT. ON
•S301---OFF 5.6V
•S301---ON
VR303 Center
0.28ms
33rpm--20ms
45rpm--15ms
3.8μs
IC301
IC201 AN6680 CONTROL
•S301--OFF
•S301--ON
IC101 AN6675 TURNTABLE DRIVE
•ROTATION
20μs
50kHz
Brake adjustment
33rpm--10ms
45rpm--7.3ms
D204
MA150
Q201
2SC1846
REGULATOR
1.193MHz
Q202
2SD637
LED DRIVER
VR303 Center
3.8μs
VR303 Center
3.8μs
IC301
AN6682
PITCH CONTROL
VR303 Center, 3.8μs
VR303 -%, 4.1μs
VR303 +%, 3.6μs
Pitch control ±0% adjustment
CN102
CN103
CN101
PITCH CONTROL
VR303 20KB
VR302 20KB
S301
Reset
Pitch control gain adjustment
D401
SVDGL-9NG2
PITCH INDICATOR
D201
D202
S203
S201
S202
S/S
33
45
D201,202
SVDPR3902S-9
SPEED INDICATOR
D203
D204
D205
D206
D203~206
SVDSLH54VT3
STROBE
PL1
STYLUS
ILLUMINATOR
R401 1.5K
S401
Stylus illuminator
switch

ORDER NO. DAD84040076S0

Service Manual

Supplement

Turntable System

SL-1200MK2

[M], [MC],
[E], [EK], [XL], [EG], [EB], [EH],
[EF], [Ei], [XA], [PA], [PE], [PC]

SL-1210MK2

[E], [EG], [EH]

Areas

- * [M] is available in the U.S.A.
- * [MC] is available in Canada.
- * [E] is available in Switzerland and Scandinavia.
- * [EK] is available in United Kingdom.
- * [XL] is available in Australia.
- * [EG] is available in F.R. Germany.
- * [EB] is available in Belgium.
- * [EH] is available in Holland.
- * [EF] is available in France.
- * [Ei] is available in Italy.
- * [XA] is available in Southeast Asia, Oceania, Africa, Middle Near East and Central South America.
- * [PA] is available in far East PX.
- * [PE] is available in European Military.
- * [PC] is available in European Audio Club.

***SL-1200MK2 is the model for silver type.**
***SL-1210MK2 is the model for black type of SL-1200MK2.**

Please use this manual together with the service manual for Model No. SL-1200MK2/1210MK2.

English

Inclusive SM & Changes

Specifications

Specifications are subject to change without notice for further improvement.
Weight and dimensions shown are approximate.

■ General

Power supply:	120V, AC 60 Hz (For [M], [MC] areas) ~110-120/220-240V, 50 or 60 Hz (For other areas)
Power consumption:	14 W (For [M], [MC] areas) 13.5 W (For other areas)
Dimensions: **(W x H x D)**	45.3 x 16.2 x 36 cm (17-27/32" x 6-19/64" x 14-11/64")
Weight:	12.5 kg (27.6 lb)

Turntable section

Type:	Quartz direct drive Manual turntable
Dirve method:	Direct drive
Motor:	Brushless DC motor
Turntable platter:	Aluminum diecast Diameter 33.2 cm (13-5/64") Weight 2 kg (4.4 lb)
Turntable speeds:	33-1/3 rpm and 45 rpm
Starting torque:	1.5 kg · cm (1.3 lb · in)
Build-up characteristics:	0.7 s. from standstill to 33-1/3 rpm
Braking system:	Electronic brake
Wow and flutter:	0.01% WRMS* 0.025% WRMS (JIS C5521) ± 0.035% peak (IEC 98A Weighted)

* This rating refers to turntable assembly alone, excluding effects of record, cartridge or tonearm, but including platter. Measured by obtaining signal from built-in frequency generator of motor assembly.

Rumble:	–56 dB (IEC 98A Unweighted) –78 dB (IEC 98A Weighted)

Matsushita Engineering and Service Company
50 Meadowland Parkway,
Secaucus, New Jersey 07094

Panasonic Hawaii Inc.
91-238 Kauhi St. Ewa Beach
P.O. Box 774
Honolulu, Hawaii 96808-0774

Matsushita Electric of Canada Limited
5770 Ambler Drive, Mississauga,
Ontario, L4W 2T3

Panasonic Sales Company, Division of Matsushita Electric of Puerto Rico, Inc.
Ave. 65 De Infanteria, KM 9.7
Victoria Industrial Park
Carolina, Puerto Rico 00630

Technics

Panasonic Tokyo
Matsushita Electric Industrial Co., Ltd.
1-2, 1-chome, Shibakoen, Minato-ku, Tokyo 105 Japan

Matsushita Electric Trading Co., Ltd.
P.O. Box 288, Central Osaka Japan

Lfd.Nr. 1845

■ Tonearm section

Type:	Universal
Effective length:	230 mm (9-1/16")
Arm height adjustment range:	0 – 6 mm
Overhang:	15 mm (19/32")
Effective mass:	12 g (without cartridge)
Offset angle:	22°
Friction:	Less than 7 mg (lateral, vertical)
Tracking error angle:	Within 2°32' (at the outer groove of 30 cm (12") record Within 0°32' (at the inner groove of 30 cm (12") record
Stylus pressure adjustment range:	0 – 2.5 g
Applicable cartridge weight range:	6 – 10 g 13.5 – 17.5 g (including headshell)
(with auxiliary weight):	9.5 – 13 g 17 – 20.5 g (including headhsell)
(with shell weight):	3.5 – 6.5 g 11 – 14 g (including headshell)
Headshell weight:	7.5 g

Notes

★ To improve the performance of SL-1200MK2/1210MK2, the bottom structure and circuit are changed in the course of production.

★ After the change, SL1200MK2–A/1210MK2–A is indicated in the name plate as the model of the set. It is discriminated from before-change set by –A. Also, check that the present change is of the sets after the change mark [D] shown in the sirial No. sheet attached to the bottom and carton box.

★ This supplement service manual contains the bottom plate disassembly procedure, change part No., circuit diagram, P.C.B. and block diagrams. The other contents are the same as for the service manual of SL-1200MK2/1210MK2 already issued.

★ Sets with cartridge (EPC-207C) are included in those for same areas.

★ Since the power transformer fitting method is different for sets with serial number sheet change mark [E], refer to the development plan on page 8.

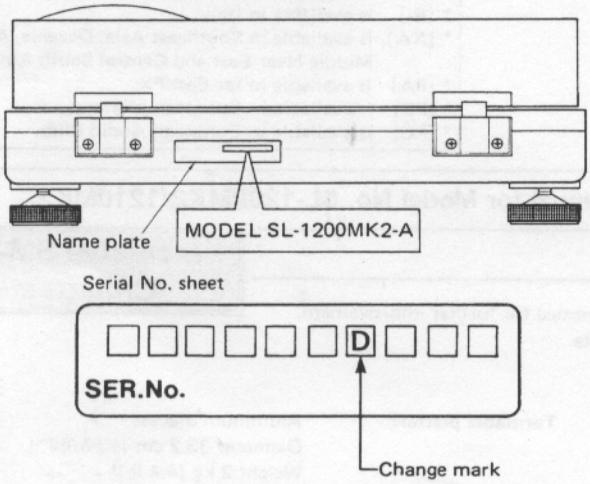

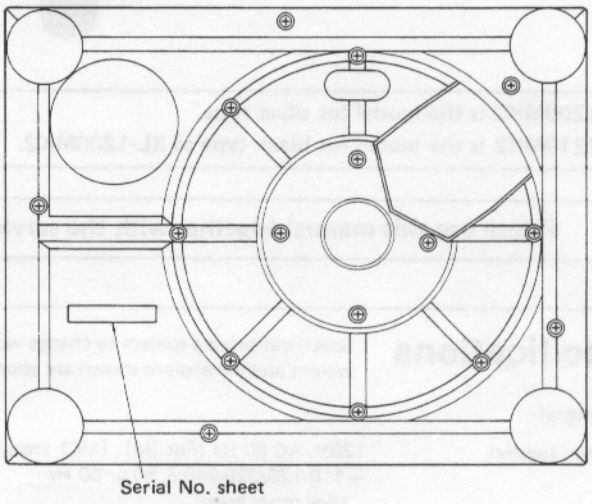

Deutsch

TECHNISCHE DATEN

Änderungen der technischen Daten vorbehalten.
Die angegebenen Gewichts- und Abmessungsdaten sind ungefähre Werte.

■ Allgemeine Daten

Stromversorgung:	~110-120/220-240 V, 50/60 Hz Wechselstrom
Leistungsaufnahme:	13,5 W
Abmessungen: (B x H x T):	45,3 x 16,2 x 36 cm
Gewicht:	12.5 kg

■ Plattenspieler

Typ:	Manueller Quarz-Direktantrieb-Plattenspieler
Antrieb:	Direktantrieb
Motor:	Kollektorloser Gleichstrommotor
Plattenteller:	Aluminium-Spritzguß Durchmesser 33,2 cm Gewicht 2 kg
Plattenteller-Drehzahlen:	33-1/3 und 45 U/min
Anlautdrehmoment:	1,5 kg · cm
Drehzahl-Hochlaufzeit:	0.7 s. vom Stillstand auf 33-1/3 U/min
Bremssystem:	Elektronische Bremse
Gleichlaufschwankungen:	0,01% WRMS* 0,025% WRMS (JIS C5521) ± 0,035% Spitze (IEC 98A bewertet)

* Diese Nennleistung bezieht sich auf das Laufwerk-Bauteil allein, ausschließlich Einflüsse von Schallplatte, Tonabnehmer oder Tonarm, aber einschließlich Plattenteller.
Gemessen anhand von Signalen vom eingebauten Frequenzgenerator des Motorbauteils.

Rumpel-Geräusch-spannungsabstand:	–56 dB (IEC 98A unbewertet) –78 dB (IEC 98A bewertet)

■ Tonarm

Typ:	Universal-Tonarm
Effektive Länge:	230 mm
Tonarmhöhe-Einstellbereich:	0 – 6 mm
Überhang:	15 mm
Effektive Masse:	12 g (ohne Tonabnehmer)
Spurfehlwinkel:	2°32′ bei der Einlaufrille einer 30 cm-Platte 0°32′ bei der Auslaufrille einer 30 cm-Platter
Kröpfungswinkel:	22°
Lagerreibung:	Weniger als 7 mg (horizontal, vertikal)
Auflagekraft-Einstellbereich:	0 – 2,5 g
Zulässiger Tonabnehmer-Gewichtbereich:	6 – 10 g 13,5 – 17 g (einschließlich Tonarmkopf)
(mit Zusatz-Gegengewicht):	9,5 – 13 g 17 – 20.5 g (einschließlich Tonarmkopf)
Gewichtbereich:	3,5 – 6.5 g
(mit Zusatzgewicht)	11 – 14 g (einschließlich Tonarmkopf)
Tonarmkopf-Gewicht:	7,5 g

Français

CARACTERISTIQUES

Les spécifications sont susceptibles d'être modifiées sans préavis.
Le poids et les dimensions donnés sont approximatifs.

■ Généralités

Alimentation:	Alternatif 110-120/220-240 V, 50 ou 60 Hz
Consommation:	13,5 W
Dimensions: (L x H x P)	45,3 x 16,2 x 36 cm
Poids:	12,5 kg

■ Platine de lecture

Type:	Entaînement direct à quartz Platine manuelle
Système d'entraînement:	Entraînement direct
Moteur:	Moteur C.C. sans balai
Plateau de lecture:	Aluminium moulé sous pression Diamètre 33,2 cm Poids 2 kg
Vitesses de rotation:	33-1/3 et 45t/p.m.
Couple de démarrage:	1,5 kg · cm
Caractéristiques d'augmentation:	0,7 s. (rotation de 90°) à 33-1/3 t/p.m.
Système de freinage:	Frein électronique
Pleurage et scintillement:	0,01% de valeur efficace* 0,025% de valeur efficace (JIS C5521) ± 0,35% de crête (IEC 98A Pondéré)

*Ce régime nominal se rapporte à l'ensemble du tournedisque seul, excluant les effets du disque, de la cellule pick-up ou de bras de lecture, mais comprenant le plateau.
Mesuré par l'obtention d'un signal provenant du générateur de fréquences incorporé de l'ensemble du moteur.

Ronflement:	–56 dB (IEC 98A Non pondéré) –78 dB (IEC 98A Pondéré)

■ Bras de lecture

Type:	Bras de lecture universel
Longueur effective:	230 mm
Portée du réglage de la hauteur de bras:	0 – 6 mm
Porte-à-faux:	15 mm
Masse réelle:	12 g (sans la cellule pick-up)
Angle d'erreur de piste:	En deçà de 2°32′ au sillon extérieur d'un disque de 30 cm En deçà de 0°32′ au sillon intérirue d'un disque de 30 cm
Angle de décalage:	22°
Frottement:	Moins de 7 mg (latéral et vertical)
Plage de réglage de la pression d'appui:	0 – 2.5 g
Gamme du poids de la cellule pick-up utilisable:	6 – 10 g 13,5 – 17,5 g (y compris la coque porte-cellule)
(avec contrepoids auxiliaire):	9,5 – 13 g 17 – 20,5 g (y compris la coque porte-cellule)
(avec contrepoids de la cellule):	3,5 – 6,5 g 11 – 14 g (y compris la coque porte-cellule)
Poids de la cellule:	7,5 g

Español

ESPECIFICACIONES

Las especificaciones quedan sujetas a cambios sin aviso previo.
El peso y las dimensiones indicados son aproximados.

■ En general

Alimentación de corriente:	~110-120/220-240 V, 50 ó 60 Hz
Consumo de corriente:	13,5 W
Dimensiones: (Ancho × Alto × Prof.)	45,3 x 16,2 x 36 cm
Peso:	12,5 kg

■ Sección del plato giratorio

Tipo:	Plato giratorio manual de accionamiento directo por cuarzo
Método de accionamiento:	Accionamiento directo
Motor:	Motor de corriente continua sin escobillas
Platillo del plato giratorio:	Aluminio fundido Diámetro 33,2 cm Peso 2 kg.
Velocidades del plato giratorio:	33-1/3 y 45 rpm
Par motor de arranque:	1,5 kg · cm
Caracteristicas de establecimiento:	0,7 s. (a partir de reposo) hasta 33-1/3 rpm
Sistema de frenado:	Freno electrónico
Ululaciones y trémolo:	0,01% WRMS* 0,025% WRMS (JIS C5521) ± 0,035% cresta (IEC 98A Ponderado)

*Estas caracteristicas se refieren únicamente al conjunto del plato giratorio, con exclusión de los efectos provenientes del disco, cartucho o del brazo sonoro, incluyendo, empero, el platillo. La medida fue tomada por medio de la señal obtenida del generador de frecuencia incorporado del conjunto del motor.

Ruido de rodadura:	−56 dB (IEC 98A No Ponderado) −78 dB (IEC 98A Ponderado)

■ Sección del brazo sonoro

Tipo:	Brazo sonoro universal
Longitud efectiva:	230 mm
Radio de ajuste de altura del brazo:	0 – 6 mm
Parte saliente:	15 mm
Masa efectiva:	12 g. (sin cartucho)
Angulo de descentramiento:	22°
Fricción:	Menos de 7 mg. (en sentido lateral y vertical)
Angulo de error de seguimiento:	Inferior a 2°32′ en el surco exterior de un disco de 30 cm Inferior a 0°32′ en el surco interior de un disco de 30 cm
Radio de ajuste de la persión de la aguja:	0 a 2,5 g.
Radio de peso de cartucho utilizable:	6 a 10 g. 13,5 a 17,5 g. (incluyendo la cápsula de la cabeza)
(con contrapeso de balance de reserva):	9,5 a 13 g. 17 a 20,5 g (incluyendo la cápsula de la cabeza)
(con contrapeso de la cápsula):	3,5 a 6,5 g 11 a 14 g (incluyendo la cápsula de la cabeza)
Peso de la cápsula de la cabeza:	7,5 g

CHANGES

■ DISASSEMBLY INSTRUCTIONS

- **How to remove the bottom cover and bottom base.**

1. Remove the turntable mat and turntable.
2. Turn over the body on a soft cloth thaking care not to damage the dust cover.
3. Remove the insulators and the 21 setscrews **(Fig. 1 : ❶,❷,❸)** of the bottom cover.
4. Remove the 6 setscrews **(Fig. 2 : ❹)** of the bottom base.

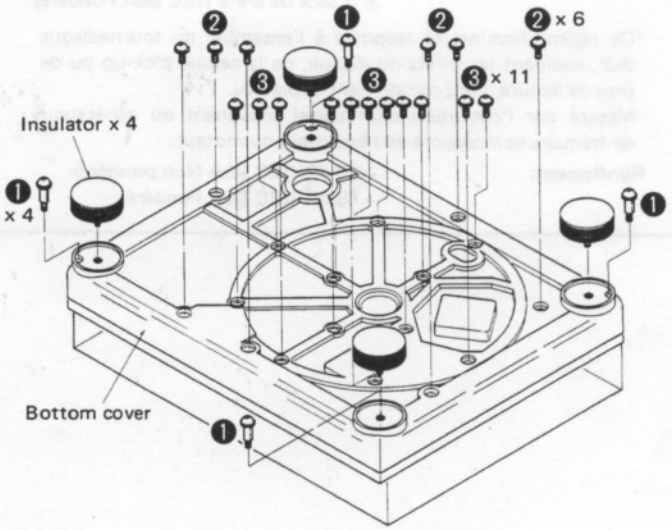

Fig. 1

Supplement

- **How to remove the hinge case**

1. Remove the bottom cover. **(Refer to "How to remove the bottom cover".)**
2. Remove the 4 setscrews **(Fig. 2 : ❺)** of the hinge case bracket.
3. Remove the 4 setscrews **(Fig. 2 : ❻)** of the hinge case.

Note: The other disassembly procedure are the same as for before-change sets.

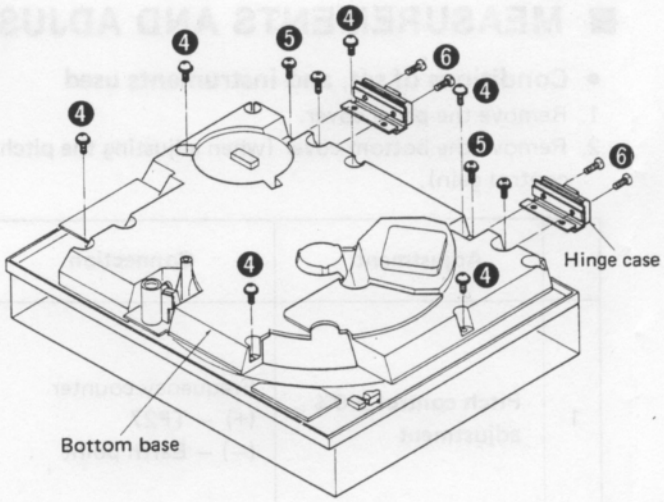

Fig. 2

■ REPLACEMENT PARTS LIST

Notes:

1. This parts list mentions only the difference between before and after change of SL-1200MK2/1210MK2.
2. Ⓚ-marked parts are used only for SL-1210MK2 (black type). And ○-marked parts are used for SL1200MK2 (silver type).
3. Parts other than Ⓚ- and ○-marked are used for both SL-1210MK2 and SL-1200MK2.
4. The "Ⓢ" mark is service standard parts and may differ from production parts.

Areas

- * [M] is available in the U.S.A.
- * [MC] is available in Canada.
- * [E] is available in Switzerland and Scandinavia.
- * [EK] is available in United Kingdom.
- * [XL] is available in Australia.
- * [EG] is available in F.R. Germany.
- * [EB] is available in Belgium.
- * [EH] is available in Holland.
- * [EF] is available in France.
- * [Ei] is available in Italy.
- * [XA] is available in Southeast Asia, Oceania, Africa, Middle Near East and Central South America.
- * [PA] is available in far East PX.
- * [PE] is available in European Military.
- * [PC] is available in European Audio Club.

Ref. No.	Change of Part No. SL-1200MK2 (Before Change)	→ SL-1200MK2/1210MK2 (After Change)	Part Name & Description	Per Set (Pcs.)	Remarks
INTEGRATED CIRCUIT					
IC302	SVITC4011BP	MN4011B	NAND Gate	1	
TRANSISTOR					
Q1	2SD389A–Q	2SD1265	Regulator	1	
DIODES					
D1	SVDS1RBA40	SVDS1RBA20Z	Rectifier	1	⚠
D201, 202	SVDSR–105C	SVDPR3902S–9	Speed Indicator	2	
D203 ~ 206	SVDEBR5505S	SVDSLH54VT3	Strobe	4	
D401	SVDGL–9PG2	SVDGL–9NG2	Pitch Indicator	1	
CRYSTAL					
X201	SVQU306115	SVQMS4193	4.193 MHz, Oscillator	1	
VARIABLE RESISTORS					
VR301	EVMH2GA00B53	EVMH1GA00B23	Pitch Control Adjustment, 2kΩ (B)	1	
VR303	EVBJ05C19ABE	SFDZ122N11	Pitch Control	1	
SWITCHES					
S203	SFDSSS5GL13C	SFDSSS01GL13	Start/Stop	1	
S601	SFDSSS5GL13S	SFDSSS5GL13P	Power	1	⚠
TRANSFORMER					
T1	SLT60EU7B	SLT66DTL3A [M]	Power Source	1	⚠
T1	SLT60E31C	SLT66DT14C [MC]	Power Source	1	⚠
T1	SLTF5900	SLT66DTE13A [Other areas]	Power Source	1	⚠

Ref. No.	Change of Part No. SL-1200MK2 (Before Change)	→ SL-1200MK2/1210MK2 (After Change)	Part Name & Description	Per Set (Pcs.)	Remarks
RESISTORS					
R4	ERD25FJ561	ERD25FJ471	Carbon, 1/4W, 470Ω	1	Ⓢ
R209	ERD25TJ154	ERD25TJ334	Carbon, 1/4W, 330kΩ	1	Ⓢ
R211	ERD25FJ103	ERD25FJ472	Carbon, 1/4W, 4.7kΩ	1	Ⓢ
R212	ERD25FJ121	ERD25FJ151	Carbon, 1/4W, 150Ω	1	Ⓢ
R222	Addition	ERD25FJ391	Carbon, 1/4W, 390Ω	1	Ⓢ
R301	ERO25CKF3301	ERO25CKF2701	Metal Film, 1/4W, 2.7kΩ	1	Ⓢ
R304	ERD25FJ152	ERD25FJ561	Carbon, 1/4W, 560Ω	1	Ⓢ
R401	Addition	ERD50FJ152	Carbon, 1/2W, 1.5kΩ	1	Ⓢ
R601	ERD25FJ4R7	ERD50FJ4R7	Carbon, 1/2W, 4.7Ω	1	△ Ⓢ
CAPACITORS					
C5, 6	Addition	ECQM1223KZ	Polyester, 125V, 0.022μF	1	△
C104 ~ 107	ECQM1H104KZ	ECQM1H104JZ	Polyester, 50V, 0.1μF	4	Ⓢ
C109, 110	ECQM1H104KZ	ECQM1H104JZ	Polyester, 50V, 0.1μF	2	Ⓢ
C111	ECQM1H562KZ	ECQM1H562JZ	Polyester, 50V, 0.0056μF	1	Ⓢ
C204	ECQM1H473KZ	ECQM1H473JZ	Polyester, 50V, 0.047μF	1	Ⓢ
C210	ECQM1H224KZ	ECQM1H224JZ	Polyester, 50V, 0.22μF	1	Ⓢ
C211	ECQM1H473KZ	ECQM1H473JZ	Polyester, 50V, 0.047μF	1	Ⓢ
C217 ~ 219	Addition	ECKD1H104ZF	Ceramic, 50V, 0.1μF	1	Ⓢ
C301	ECQK1123FZ	ECQK1333GZ	Polyester, 125V, 0.033μF	1	
C302	ECQK1123FZ	ECQK1682GZ	Polyester, 125V, 0.0068μF	1	
C305	ECQM1H122KZ	ECQM1H122JZ	Polyester, 50V, 0.0012μF	1	Ⓢ
CABINET and CHASSIS PARTS					
9	SFUP122–12	Deletion	----------	0	
10	SFAC122–01	SFAC122–01	Cabinet (Silver)	1	○
		SFAC124S01	Cabinet (Black)	1	Ⓚ
25	SFXB122–02	SFXB122–06	Boss, Drive	1	
33	SFQA001–02	SFQA122–03	Spring	1	
36	SFUP025–01	SFUP122–16 [M, MC, PA, PE, PC]	Bracket, AC Cord	1	
	SFUP025X01	SFUP122X01 [Other areas]	Bracket, AC cord	1	
38	SFUP132–03	SFGC122–03	Cushion	2	
40	SFUP122–10	Deletion	----------	0	
42	SFKK122–03	SFKK122–03	Plate (Silver)	1	
		SFKK124S01	Plate (Black)	1	
48	SFAU122–01	SFAU122–02	Bottom Base	1	
48–1	Addition	SFAU122–03	Bottom Cover	1	
49	SFUP122–05	SFUP122–23	Supporter (A), Hinge	2	
50	SFUP122–04	SFUP122–24	Supporter (B), Hinge	2	
51	SFUM170–07	SFUMM02N04	Case, Hinge	2	
55	SFNN122M01	SFNN122M10 [M]	Name Plate	1	○
	SFNN122C01	SFNN122C10 [MC]	Name Plate	1	○
	SFNN122S01	SFNN122S10 [E]	Name Plate	1	○
	SFNN122L01	SFNN122G10 [EK, XL]	Name Plate	1	○
	SFNN122X01	SFNN122X10 [XA]	Name Plate	1	○
	Addition	SFNN122P10 [PA, PE]	Name Plate	1	○
	Addition	SFNN122P11 [PC]	Name Plate	1	○
	SFNN122N01	SFNN122N10 [Other areas]	Name Plate	1	○
	Addition	SFNN124S10 [E]	Name Plate	1	Ⓚ
	Addition	SFNN124Q10 [EG, EH]	Name Plate	1	Ⓚ
56	SFX0122–01	Deletion	----------	0	
57	SFX0122–02	Deletion	----------	0	
58	SFAT122–01A	SFATM02N01A	Hinge	1	

Ref. No.	Change of Part No. SL-1200MK2 (Before Change)	→ SL-1200MK2/1210MK2 (After Change)	Part Name & Description	Per Set (Pcs.)	Remarks
TONEARM PARTS					
62	SFPAM18201K	SFPAM18201K	Tonearm Ass'y (Silver)	1	○
		SFPAM18202K	Tonearm Ass'y (Black)	1	Ⓚ
79	SFPKB17201S	SFPKB17204E	Ring, Arm Base Operation	1	
82	SFGK132–01	SFGK132–01	Cap (Silver)	1	○
		SFGK133S01	Cap (Black)	1	Ⓚ
ACCESSORIES					
A1	SFNU122M01	SFNU122M06 [M]	Instruction Book	1	
	SFNU122C01	SFNU122C06	Instruction Book	1	
	SFNU122S01	SFNU122S01 [E]	Instruction Book	1	
	SFNU122G01	SFNU122G01 [EK]	Instruction Book	1	
	Addition	SFNU122P01 [PA, PE, PC]	Instruction Book	1	
	SFNU122X01	SFNU122X01 [Other areas]	Instruction Book	1	
A2	SFWE010	SFWE122–01	45 Adaptor	1	
PACKING PARTS					
P1	SFHP122C01	SFHP122C02 [MC, EF]	Carton Box (Silver)	1	○
	SFHP122M01	SFHP122M02 [Other areas]	Carton Box (Silver)	1	○
		SFHP124S02	Carbon Box (Black)	1	Ⓚ
P9	Addition	SPB1083	Polyethylene Bag, Accessories	2	
P10	Addition	SPJ15	Polyethylene Bag, Shell Weight	1	
P11	Addition	SFHZD03M01	Polyethylene Bag, Dust Cover	3	
P12	Addition	SFHZ122–01	Polyethylene Bag, 45 Adaptor	1	
P13	Addition	SPP189	Polyethylene Bag, Cords	2	

■ ADJUSTMENT POINTS

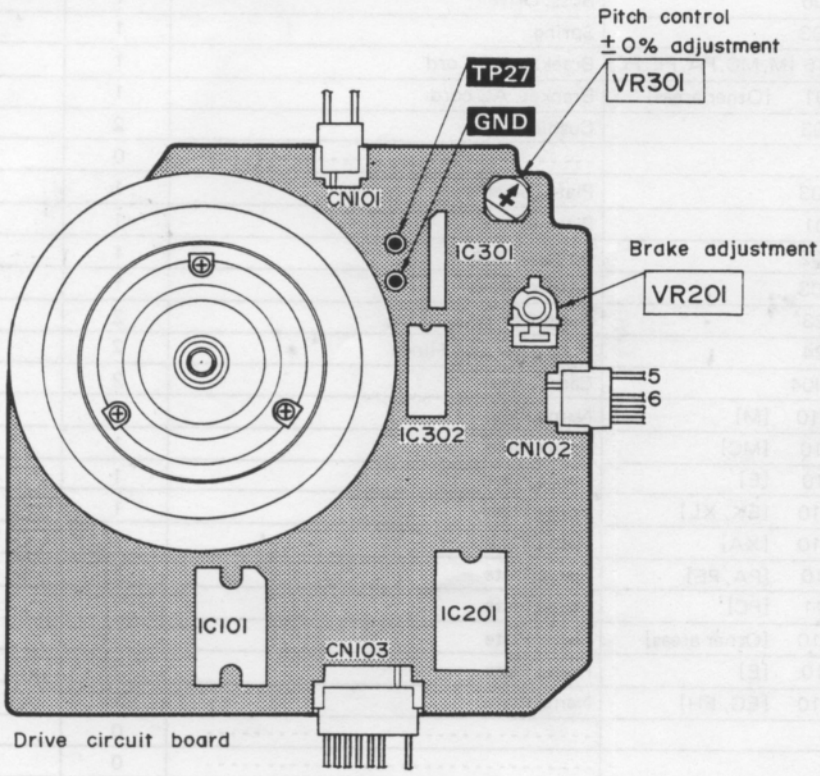

Fig. 3 (Abb. 3)

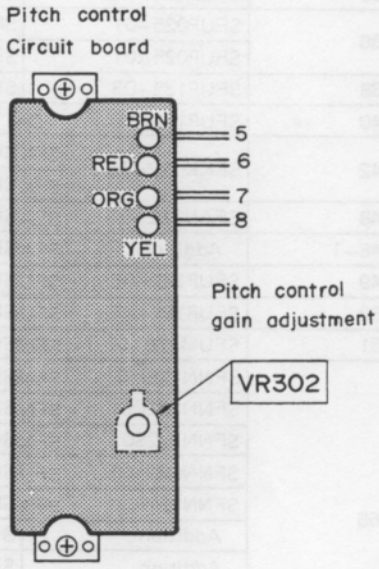

Fig. 4 (Abb. 4)

■ MEASUREMENTS AND ADJUSTMENTS — English

- **Conditions of set, and instruments used**

1. Remove the panel cover.
2. Remove the bottom cover (when adjusting the pitch control gain).
3. Frequency counter
4. Tester

	Adjustment	Connection	Parts adjusted	Procedure
1	**Pitch control ± 0% adjustment**	Frequency counter (+) – TP27 (–) – Earth point	VR301 (Fig. 3)	1. Connect the frequency counter and turn the power supply ON. 2. Set the pitch control knob to "0". (Indicator lights up.) 3. Adjust VR301 so that the frequency is 262.08 kHz ± 0.05 kHz.
2	**Pitch control gain adjustment**	Tester (+) – CN102 terminal ⑤ (–) – CN102 terminal ⑥	VR302 (Fig. 4)	1. Set the pitch control knob to "0". 2. Pull out the connector CN102 of drive P.C.B. 3. Connect the tester to terminals, ⑤ and ⑥ of connector CN102 on the pitch control P.C.B. side. 4. Adjust VR302 so that the resistance value of the tester is 2.7 kΩ ± 0.1 kΩ.
3	**Brake adjustment**	———	VR201 (Fig. 3)	1. Adjust VR201 so that the rotation at 33 r.p.m. stops within the angle of 90° ~120° after depressing the stop button.

■ MESSUNGEN UND JUSTIERUNGEN — Deutsch

- **Zustand des Gerätes und zu verwendende Instrumente**

1. Die Abdeckplatte entfernen.
2. Die Bodenadbeckung entfernen (wenn die Drehzahlregelungs-Verstärkung justiert werden soll).
3. Frequenzzähler
4. Prüfgerät

	Justierung	Anschlüsse	Zu justierender Teile	Vorgehen
1	**± 0%-Justierung des Drehzahlreglers**	Frequenzzähler (+) – TP27 (–) – Massepunkt	VR301 (Abb. 3)	1. Frequenzzähler anschließen und Netzschalter einschalten. 2. Drehzahlreglerknopf auf "0" stellen. (Anzeige leuchtet auf.) 3. VR301 so justieren, daß die Frequenz 262,08 kHz ± 0,05 kHz beträgt.
2	**Justierung der Drehzahlregelungs-Verstärkung**	Prüfgerät (+) – CN102 Anschluß ⑤ (–) – CN102 Anschluß ⑥	VR302 (Abb. 4)	1. Den Drehzahlreglerknopf auf "0" einstellen. 2. Steckverbindung CN102 von der Antriebsplatine hrausziehen. 3. Prüfgerät an Anschlüsse ⑤ und ⑥ der Steckverbindung CN102 auf der Drehzahlreglerseite der Platine anschließen. 4. VR302 so justieren, daß der Widerstandswert des Prüfgerätes 2,7 kΩ ± 0,1 kΩ beträgt.
3	**Bremsjustierung**	———	VR201 (Abb. 3)	1. VR201 so justieren, daß die Rotation bei 33 UPM innerhalb 90° ~ 120° nach Drücken der Stop-Taste stoppt.

■ MESURAGES ET RÉGLAGES — Français

- **Conditions de l'appareil et appareils utilisés.**

1. Retirer le panneau de protection.
2. Retirer le panneau de protection inférieur (lors de l'ajustement de l'amplification du réglage d'écart).
3. Compteur de fréquence
4. Appareil contrôleur

	Mise au point	Raccordement	Elements à regler	Marche à suivre
1	**Ajustement de ± 0% du réglage d'écart**	Compteur de fréquence (+) – TP27 (–) – Point de contact à la terre	VR301 **(Fig. 3)**	1. Raccorder le compteur de fréquence et mettre en marche l'alimentaiton. 2. Régler le bouton du réglage d'écart sur "0". (L'indicateur s'éclairera.) 3. Ajuster VR301 de telle sorte que la fréquence soit de 262,08 kHz ± 0,05 kHz.
2	**Ajustement de l'amplification du réglage d'écart**	Appareil contrôleur (+) – Borne CN102 ⑤ (–) – Borne CN102 ⑥	VR302 **(Fig. 4)**	1. Régler le bouton de réglage d'écart sur "0". 2. Retirer le connecteur CN102 de la plaquette à circuits imprimés de commande. 3. Raccorder l'appareil contrôleur aux bornes ⑤ et ⑥ du connecteur CN102 sur le côté de la plaquette à circuits imprimés du réglage d'écart. 4. Ajuster VR302 de telle sorte que la valeur de résistance de l'appareil contrôleur soit de 2,7 kΩ ± 0,1 kΩ.
3	**Ajustement du frein**	———	VR201 **(Fig. 3)**	1. Régler VR201 de telle sorte que la rotation à 33 t/p.m. s'arrête en deçà d'un angle de 90° ~ 120° après avoir appuyé sur la touche d'arrêt.

■ MEDICIONES Y AJUSTE — Español

- **Condiciones de aparato e instrumentos usados**

1. Remover la cubierta del panel.
2. Remover la cubierta inferior (al ajustar la ganancia de control de altura de los sonidos).
3. Contador de frecuencia
4. Probador

	Ajuste	Conexión	Piezas ajustadas	Procedimiento
1	**Ajuste ± 0% de control de altura**	Contador de frecuencia (+) – TP27 (–) – Punto de tierra	VR301 **(Fig. 3)**	1. Conectar el contador de frecuencia y prender la fuente de alimentación. 2. Ajustar la perilla de control de altura de sonidos a "0". (El indicador se ilumina.) 3. Ajustar VR301 de manera que la frecuencia sea 262,08 kHz ± 0,05 kHz.
2	**Ajuste de ganancia de control de altura**	Probador (+) –Terminal de CN102 ⑤ (–) –Terminal de CN102 ⑥	VR302 **(Fig. 4)**	1. Poner el control de altura de sonidos en "0". 2. Sacar el conector CN102 de T.C.I. de accionamiento. 3. Conectar el probador a terminales,⑤y⑥de conector CN102 del lado de T.C.I. de control de altura. 4. Ajustar VR302 de manera que el valor de resistencia del probador sea 2,7 kΩ ± 0,1 kΩ.
3	**Ajuste de freno**	———	VR201 **(Fig. 3)**	1. Ajustar VR201 de manera que la rotación a 33 r.p.m. se pare dentro del ángulo de 90° ~ 120° después oprimir el botón de parada.

■ RESISTORS AND CAPACITORS

Notes:
1. Part numbers are indicated on most mechanical parts. Please use this part number for parts orders.
2. Important safety notice: Components identified by ⚠ mark have special characteristics important for safety. When replacing any of these components use only manufacturer's specified parts.
3. The "Ⓢ" mark is service standard parts and may differ from production parts.
4. Bracketed indications in Ref. No. colum specify the area. Parts without these indications can be used for all area.
5. The unit of resistance is Ω (ohm). K = 1000Ω, M = 1000kΩ
6. The unit capacitance is μF (microfarad). P = 10^{-6} μF

Areas

- * [M] is available in the U.S.A.
- * [MC] is available in Canada.
- * [E] is available in Switzerland and Scandinavia.
- * [EK] is available in United Kingdom.
- * [XL] is available in Australia.
- * [EG] is available in F.R. Germany.
- * [EB] is available in Belgium.
- * [EH] is available in Holland.
- * [EF] is available in France.
- * [Ei] is available in Italy.
- * [XA] is available in Southeast Asia, Oceania, Africa, Middle Near East and Central South America.
- * [PA] is available in far East PX.
- * [PE] is available in European Military.
- * [PC] is available in European Audio Club.

Numbering System of Resistor

Example

ERD	25	F	J	101
Type	Wattage	Shape	Tolearance	Value
ERX	2	AN	J	2R2
Type	Wattage	Shape	Tolerance	Value

Resistor type	Wattage	Tolerance
ERD: Carbon	25 : 1/4W	F : ±1%
ERG: Metal Oxide	50 : 1/2W	J : ±5%
ERO: Metal Film	1A : 1W	
ERX: Metal Film	2A : 2W	

Numbering System of Capacitor

Example

ECKD	1H	102	Z	F
Type	Voltage	Value	Tolerance	Peculiarity
ECEA	50	M	R47	R
Type	Voltage	Reculiarity use	Value	Special use

Capacitor Type		Voltage		Tolearnce	
ECEA	: Electrolytic	OJ	: 6.3V	J	: ±5%
ECEB	: Electrolytic	1C	: 16V	K	: ±5%
ECCD	: Ceramic	1E	: 25V	M	: ±20%
ECQM	: Polyester	1H	: 50V	Z	: +80%,−20%
ECQU	: Polyester	1	: 100V		
ECQF	: Polyester	1A	: 125V		
ECNC	: Polyester	4A	: 400V		

Ref. No.		Part No.	Value
RESISTORS			
R1	Ⓢ	ERD25FJ562	5.6K
R2	Ⓢ	ERD25FJ682	6.8K
R3	Ⓢ	ERD25FJ272	2.7K
R4,5	Ⓢ	ERD25FJ471	470
R101	Ⓢ	ERD25FJ103	10K
R102	Ⓢ	ERX1ANJ4R7	4.7
R103	Ⓢ	ERD25FJ472	4.7K
R104	Ⓢ	ERD25TJ473	47K
R105	Ⓢ	ERD25FJ103	10K
R106	Ⓢ	ERD25FJ150	15
R107	Ⓢ	ERX1ANJ1R5	1.5
R108	Ⓢ	ERD25FJ103	10K
R109,110	Ⓢ	ERX1ANJ4R7	4.7
R201	Ⓢ	ERG1ANJ561	560
R202	Ⓢ	ERD25FJ103	10K
R203	Ⓢ	ERD25FJ470	47
R204	Ⓢ	ERD25FJ272	2.7K
R205	Ⓢ	ERD25TJ124	120K
R206	Ⓢ	ERD25TJ183	18K
R207	Ⓢ	ERD25TJ563	56K
R208	Ⓢ	ERD25TJ224	220K
R209	Ⓢ	ERD25TJ334	330K

Ref. No.		Part No.	Value
R210	Ⓢ	ERD25TJ183	18K
R211	Ⓢ	ERD25FJ472	4.7K
R212	Ⓢ	ERD25FJ151	150
R213	Ⓢ	ERD25FJ122	1.2K
R214	Ⓢ	ERD25TJ223	22K
R215	Ⓢ	ERD25FJ472	4.7K
R216	Ⓢ	ERD25TJ154	150K
R217	Ⓢ	ERD25TJ223	22K
R218	Ⓢ	ERD25FJ102	1K
R219	Ⓢ	ERD25FJ332	3.3K
R220	Ⓢ	ERD25FJ221	220
R221	Ⓢ	ERD25FJ471	470
R222	Ⓢ	ERD25FJ391	390
R301	Ⓢ	ER025CKF2701	2.7K
R302	Ⓢ	ERD25FJ471	470
R303	Ⓢ	ERD25FJ822	8.2K
R304	Ⓢ	ERD25FJ561	560
R305	Ⓢ	ERD25FJ181	180
R306	Ⓢ	ERD25TJ223	22K
R307	Ⓢ	ERD25FJ272	2.7K
R401 ⚠	Ⓢ	ERD50FJ152	1.5K
R601 ⚠	Ⓢ	ERD50FJ4R7	4.7

Ref. No.		Part No.	Value
CAPACITORS			
C1		ECEB1HU471	470
C2		ECEA1EU330	33
C3		ECEA1EU220	22
C5,6		ECQM1223KZ	0.022
C101,102		ECEA1EU330	33
C103		ECEA1EU330	33
C104,105	Ⓢ	ECQM1H104JZ	0.1
C106,107	Ⓢ	ECQM1H104JZ	0.1
C108		ECEA1EU101	100
C109,110	Ⓢ	ECQM1H104JZ	0.1
C111	Ⓢ	ECQM1H562JZ	0.0056
C112		ECEA1HU4R7	4.7
C201		ECEA1CU330	33
C202,203		ECEA1HU010	1
C204	Ⓢ	ECQM1H473JZ	0.047
C205		ECEA0JU221	220
C206		ECEA1HU010	1
C207	Ⓢ	ECCD1H101K	100P
C208	Ⓢ	ECCD1H220K	22P
C209		ECEA1CU101	100

Ref. No.		Part No.	Value
C210	Ⓢ	ECQM1H224JZ	0.22
C211	Ⓢ	ECQM1H473JZ	0.047
C212		ECEA1HU3R3	3.3
C213	Ⓢ	ECCD1H471K	470P
C214		ECEA1CU101	100
C215		ECEA1HU010	1
C216		ECEA1CU470	47
C217,218		ECKD1H104ZF	0.1
C219		ECKD1H104ZF	0.1
C301		ECQK1333GZ	0.033
C302		ECQK1682GZ	0.0068
C303		ECEA1HU010	1
C304		ECEA1CU100	10
C305	Ⓢ	ECQM1H122JZ	0.0012
C306		ECEA1HU010	1
C601 (M) ⚠		ECQF1A473MD	0.047
C601 (MC) ⚠		ECQU1A47ME	0.047
C601 (Other ares) ⚠		ECNC4A473M	0.047

■ REPLACEMENT PARTS LIST

Notes:
1. Part numbers are indicated on most mechanical parts. Please use this part number for parts orders.
2. Important safety notice: Components identified by ⚠ mark have special characteristics important for safety. When replacing any of these components use only manufacturer's specified parts.
3. Bracketed indications in Ref. No. columns specify the area. Parts without these indications can be used for all areas.
4. The "Ⓢ" mark is service standard parts and may differ from production parts.
5. The parenthesized numbers in the column of description stand for the quentity per set.
6. Ⓚ -marked parts are used only for SL-1210MK2 (black type). And ○-marked parts are used for SL-1200MK2 (silver type).
7. Parts other than Ⓚ-and ○-marked are used for both SL-1210MK2 and SL-1200MK2.

Areas

* [M] is available in the U.S.A.
* [MC] is available in Canada.
* [E] is available in Switzerland and Scandinavia.
* [EK] is available in United Kingdom.
* [XL] is available in Australia.
* [EG] is available in F.R. Germany.
* [EB] is available in Belgium.
* [EH] is available in Holland.
* [EF] is available in France.
* [Ei] is available in Italy.
* [XA] is available in Southeast Asia, Oceania, Africa, Middle Near East and Central South America.
* [PA] is available in far East PX.
* [PE] is available in European Military.
* [PC] is available in European Audio Club.

Ref. No.	Part No.	Description
INTEGRATED CIRCUITS		
IC101	AN6675	Turntable Drive
IC201	AN6680	Turntable Control
IC301	AN6682	Pitch Control
IC302	MN4011B	NAND Gate
TRANSISTORS		
Q1	2SD1265	Regulator
Q2,3	2SD637	Regulator
Q201 Ⓢ	2SC1846-R	Regulator
Q202	2SD637	LED Driver
Q203 Ⓢ	2SC1328-T	FG Amp.
DIODES		
D1 ⚠	SVDS1RBA20Z	Rectifier
D2	MA1051	5.1V Zener
D201,202	SVDPR3902S-9	Speed Indicator
D203~206	SVDSLH54VT3	Strobe
D204A	MA162A	Switching
D301	MA1051	5.1V Zener
D401	SVDGL-9NG2	Pitch Indicator

Ref. No.	Part No.	Description
CRYSTAL		
X201	SVQMS4193	4.193MHz Oscillator
VARIABLE RESISTORS		
VR201 Ⓢ	EVTS3MA00B54	Brake Adjustment,50kΩ(B)
VR301	EVMH1GA00B23	Pitch Control±0% Adjustment,2kΩ(B)
VR302 Ⓢ	EVTS3MA00B54	Pitch Control Gain Adjustment,50kΩ(B)
VR303	SFDZ122N11	Pitch Control
SWITCHES		
S201,202	EVQP5R04K	Speed Selector
S203	SFDSSS01GL13	Stort/Stop
S401	SFDSD2MSL-C	Stylus-Illuminator
S601 ⚠	SFDSSS5GL13P	Power
S602 Except for [M,MC] ⚠	SFDSHXW01317	Voltage Selector

Ref. No.	Part No.	Description
LAMP		
PL1 ⚠	SFDN122-01	Stylus Illuminator
TRANSFORMER		
T1 [M] ⚠	SLT66DTL3A	Power Source
T1 [MC] ⚠	SLT66DT14C	Power Source
T1 [Other areas] ⚠	SLT66DTE13E	Power Source
FUSES		
F1 [MC] ⚠	XBA1F12NU14	125V,1.2A
F1 Except for [M,MC] ⚠	XBA2C025T1A	250V,T250mA
F2 Except for [M,MC] ⚠	XBA2C10TR0	250V,T1A

L-1200MK2/1210MK2

Ref. No.	Part No.	Description	
CHABINET AND CHASSIS PARTS			
1	SFAD122-01A	Dust Cover	(1)
2	SFTG172-01	Turntable Mat	(1)
3	SFTE172-01	Turntable Platter Ass'y	(1)
4	SFUM172-05	Cover, Cabinet	(1)
5	SFMGQ20-01	Cover, Drive Coil	(1)
6	SFMG520-31A	Drive Coil Ass'y	(1)
7	SFMZ172-01E	FG Coil Ass'y	(1)
8	SFMZQ20-01A	Shaft Ass'y, Turntable	(1)
10 ○	SFAC122-01	Cabinet (Silver)	
10 Ⓚ	SFAC124S01	Cabinet (Black)	(1)
11	SFUM172-04	Ornament, Stylus Illuminator	(1)
12	SFKT122-01	Knob, Power Switch	(1)
13	SFKK122-01E	Case, Strobe Illuminator	(1)
14	SFKT015-06	Button, Start/Stop	(1)
15	SFQA122-01	Spring, Start/Stop Button	(1)
16	SFUM122-01	Base, Operation	(1)
17	SFKT015-01E	Button, Speed (33)	(1)
18	SFDJ122-02E	Connector, 7pin	(1)
19	SFGZ122-01	Spacer, Rubber	(1)
20	SFYB-5-32	Ball, Switch Cam	(1)
21	SFQA520-01	Spring, Switch Cam	(1)
22	SFUM122-03	Cam, Power Switch	(1)
23	SFUM015-11	Spacer, Speed Indicator	(2)
24	SFKK172-01	Cover,Stylus Illuminator	(1)
25	SFXB122-06	Boss, Drive	(1)
26	SFQA172-01	Spring, Drive Boss	(1)
27	SFXJ172-01	Pin, Lock Canceler	(1)
28	SFUP122-02E	Bracket, Stylus Illuminator	(1)
29	SFUP122-03	Plate, Lock Operation	(1)
30	SFDJ122-03E	Connector, 3pin	(1)
31	SFX0172-01	Pin, Guide	(1)
32	SFQA520-01	Spring, Lock Canceler	(1)
33	SFQA122-02	Spring, Lock Operation Plate	(1)
34	SFXJ172-05	Pin, Lock Operation Plate	(1)
35〔M,MC,PA PE,PC〕	SFHK040L	Clamper, AC Cord	(1)
35〔EK〕	SFSR-5N-4	Clamper, AC Cord	(1)
35〔Other areas〕	SFSR-4N-4	Clamper, AC Cord	(1)
36〔M,MC,PA PE,PC〕	SFUP122-16	Bracket, AC Cord	(1)
36〔Other areas〕	SFUP122X01	Bracket, AC Cord	(1)
37 ⚠Ⓢ 〔M,MC〕	RJA9Y	AC Cord	(1)
37〔EK〕 ⚠Ⓢ	QFC1205M	AC Cord	(1)
37〔XL〕 ⚠Ⓢ	SJAG23	AC Cord	(1)
37 ⚠Ⓢ 〔PA,PE,PC〕	SJA83	AC Cord	(1)
37 ⚠Ⓢ 〔Other areas〕	SJA88	AC Cord	(1)
38	SFGC122-03	Rubber, Power Transformer	(2)
39	SFGC122-01	Cushion, Power Transformer	(3)
41	SFKT122-02	Knob, Pitch Control	(1)
42 ○	SFKK122-03	Ornament (Silver), Pitch Control	(1)
42 Ⓚ	SFKK124S01	Ornament (Black), Pitch Control	(1)
43	SFUZ122-01	Felt	(1)
44	SFUP122-09	Holder, LED	(1)
45	SFUP122-01	Bracket, Pitch Control	(1)
46	SFDJ122-01E	Connector, 4pin	(1)
48	SFAU122-02	Bottom Base	(1)
48-1	SFAU122-03	Bottom Cover	(1)
49	SFUP122-23	Supporter (A),Hinge	(2)
50	SFUP122-24	Supporter (B), Hinge	(2)
51	SFUMM02N04	Case, Hinge	(2)

Ref. No.	Part No.	Description	
52	SFGC122-02E	Insulator	(4)
54	SFKT015-02E	Button, Speed (45)	(1)
55〔M〕 ○	SFNN122M10	Name Plate	(1)
55〔MC〕 ○	SFNN122C10	Name Plate	(1)
55〔E〕 ○	SFNN122S10	Name Plate	(1)
55〔EK,XL〕 ○	SFNN122G10	Name Plate	(1)
55〔XA〕 ○	SFNN122X10	Name Plate	(1)
55〔PA,PE〕 ○	SFNN122P10	Name Plate	(1)
55〔PC〕 ○	SFNN122P11	Name Plate	(1)
55〔Other areas〕 ○	SFNN122N10	Name Plate	(1)
55〔E〕 Ⓚ	SFNN124S10	Name Plate	(1)
55 Ⓚ 〔EG,EH〕	SFNN124Q10	Name Plate	(1)
58	SFATM02N01A	Hinge	(2)
59	SFUP122-25	Plate,Power transformer	(1)
TONEARM PARTS			
61	SFPCC31001K	Headshell	(1)
62 ○	SFPAM18201K	Tonearm Ass'y (Silver)	(1)
62 Ⓚ	SEPAM18202K	Tonearm Ass'y (Black)	(1)
63	SFPWG17201K	Balance Weight	(1)
64	SFPRT18201K	Lift Ass'y	(1)
65	SFPZB17202	Knob, Arm Base Lock	(1)
66	SFQA829-03	Spring, Lift Ass'y	(1)
67	SFPAB13202	Knob, Arn Lift	(1)
68	SFPJL18202K	Oil Damper	(1)
70	SFPZB12203	Plate, Arm Base Cover	(1)
71	SFUM170-06	Spacer, Phono Cord	(1)
72	SEPZB12204	Clamper, Phono Cord	(1)
73	SFPAB18201K	Tonearm Fixing Plate	(1)
74	SFPZB12201K	Plate	(1)
75	SFDH122-05	Phono Cord	(1)
76	SFEL028-01E	Ground Wire	(1)
77	SFPRT17201K	Arm Rest	(1)
78 ○	SFPKD17203	Arm Base (Silver)	(1)
78 Ⓚ	SFPKD17205	Arm Base (Black)	(1)
79	SFPKB17204E	Ring,Arm Base Operation	(1)
80	SFPKD12201	Bracket, Arm Base	(1)
81	SFPAB17206	Knob, Anti-Skating	(1)
82 ○	SFGK132-01	Cap (Silver)	(1)
82 Ⓚ	SFGK133S01	Cap (Black)	(1)
SCREW,NUT AND WASHERS			
N1 Ⓢ	XTN3+8BFZ	Screw	(5)
N2	SFXGQ20-02	Screw	(3)
N3 Ⓢ	XTN3+8B	Screw	(8)
N4 Ⓢ	XWG3	Washer	(12)
N5 Ⓢ	XTN26+6B	Screw	(3)
N6 Ⓢ	XTV3+8BFN	Screw	(8)
N7	SFXG172-01	Screw	(3)
N8	XTN3+5J	Screw	(2)
N9	SFXW172-03	Washer	(1)
N10	SFPEW11003	Washer	(6)
N11 Ⓢ	XWE3E10	Washer	(3)
N12 Ⓢ	XWA3B	Washer	(8)
N13 Ⓢ	XSN3+10S	Screw	(3)
N14	SFXW910J02	Washer	(1)
N15 Ⓢ	XTN3+10B	Screw	(5)
N16 Ⓢ	XTN2+10B	Screw	(1)
N17 Ⓢ	XUC3FT	Circlip	(2)
N18	XSN17+3FY	Screw	(1)
N19 Ⓢ	XUC2FT	Circlip	(1)
N20 Ⓢ	XUC25FT	Circlip	(1)
N21 Ⓢ	XSN3+14S	Screw	(1)
N22	RTW-12	Circlip	(1)
N23 Ⓢ	XSN2+10	Screw	(2)
N24 Ⓢ	XSN3+6S	Screw	(2)
N25 Ⓢ	XTN3+6B	Screw	(5)
N26	XTWS3+14TFZ	Screw	(6)
N27	SFXG122-02	Screw	(11)
N29	SFXG122-01	Screw	(4)
N30	XTN3+14QFZ	Screw	(6)

Ref. No.	Part No.	Description	
N31 Ⓢ	XWG3FZ	Washer	(6)
N32 Ⓢ	XSN3+14BVS	Screw	(4)
N33 Ⓢ	XWA3BFZ	Washer	(4)
N34	SFXG829-1	Screw	(1)
N35 Ⓢ	XSN3+8S	Screw	(2)
N36 Ⓢ	XUC5FT	Circlip	(1)
N37	SFPEV17202	Screw	(3)
N38 Ⓢ	XTN3+25B	Screw	(1)
N39	SFPEW1100	Washer	(1)
N40 Ⓢ	XSN3+6BVS	Screw	(4)
N41 Ⓢ	XWC3BFZ	Washer	(1)
N42 Ⓢ	XSN3+12BVS	Screw	(2)
N43 Ⓢ	XWG3FZ	Washer	(2)
N44	SFXW701-02	Washer	(1)
N45	SFPEW00705	Washer	(4)
N46	XTW26+5E	Screw	(1)
ACCESSORIES			
A1〔M〕	SFNU122M06	Instruction Book	(1)
A1〔MC〕	SFNU122C06	Instruction Book	(1)
A1〔E,EB,EC〕	SFNU122S01	Instruction Book	(1)
A1〔EK〕	SFNU122G01	Instruction Book	(1)
A1〔PA, PE,PC〕	SFNU122P01	Instruction Book	(1)
A1〔Other areas〕	SFNU122X01	Instruction Book	(1)
A2	SFWE010	45 Adaptor	(1)
A3	SFPEN3302	Nut,Cartridge	(2)
A4	SFPEW9601	Washer,Cartridge	(2)
A5	SFCZV8801	Screw,Cartridge	(2)
A6	SFPEV9801	Screw,Cartridge	(2)
A7	SFK0135-01	Overhang Gauge	(1)
A8	SFPZB3501	Shell Weight	(1)
A9 ⚠ 〔XA〕Only	SFDKI19118	2pin Plug	(1)
A10	SFPWG17202	Sub-weight	(1)
A11 ⚠ 〔PA,PE, PC〕Only	QJP0603S	Adaptor, Gimens	
PACKING PARTS			
P1〔MC, EF〕 ○	SFHP122C02	Carton Box (Silver)	(1)
P1〔Other areas〕 ○	SFHP122M02	Carton Box (Silver)	(1)
P1 Ⓚ	SFHP124S02	Carton Box (Black)	(1)
P2	SFHH122-01	Pad, Front	(1)
P3	SFHH122-02	Pad, Rear	(1)
P4	SFHD122N05	Pad, Top	(1)
P5	SFHD122-02	Pad (A), Turntable	(1)
P6	SFHD122N06	Pad (B), Turntable	(1)
P7	SFYH60X60	Polyethylene Bag, Unit& Dust Cover	(2)
P8	SFYH40X45	Polyethylene Bag, Turntable	(1)
P9	SPB1083	Polyethylene Bag, Accessories	(3)
P10	SPJ15	Polyethylene Bag, Shell Weight	(1)
P11	SFHZD03M01	Cover Sheet, Dust Cover	(1)
P12	SFHZ122-01	Cover Sheet, 45Adaptor	(1)
P13	SPP189	Cover Sheet, Cords	(2)

■ EXPLODED VIEWS

- **Cabinet and Chassis Parts**

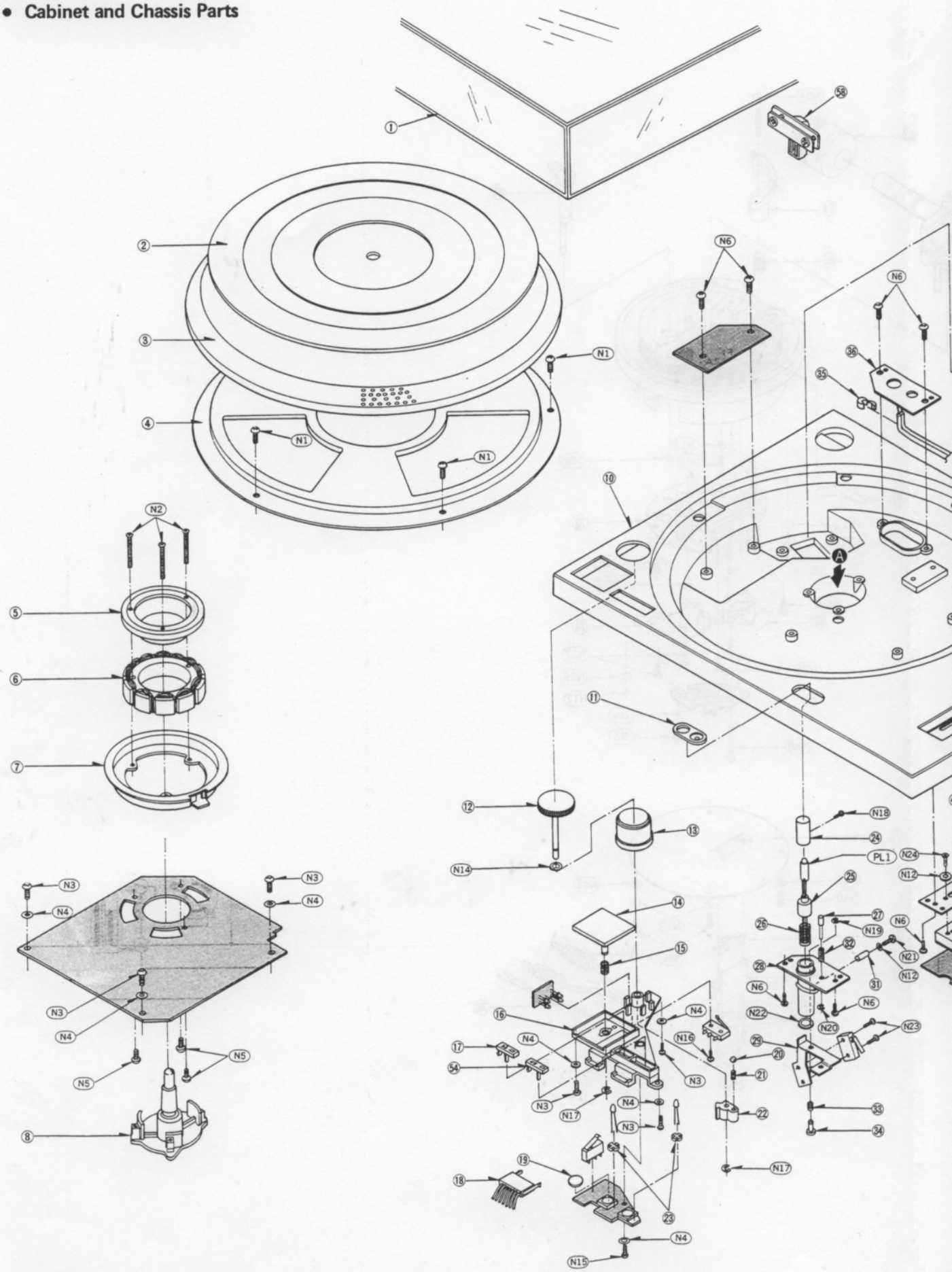

Note: For the set with serial number sheet change mark [E], the power transformer is fitted as shown below.

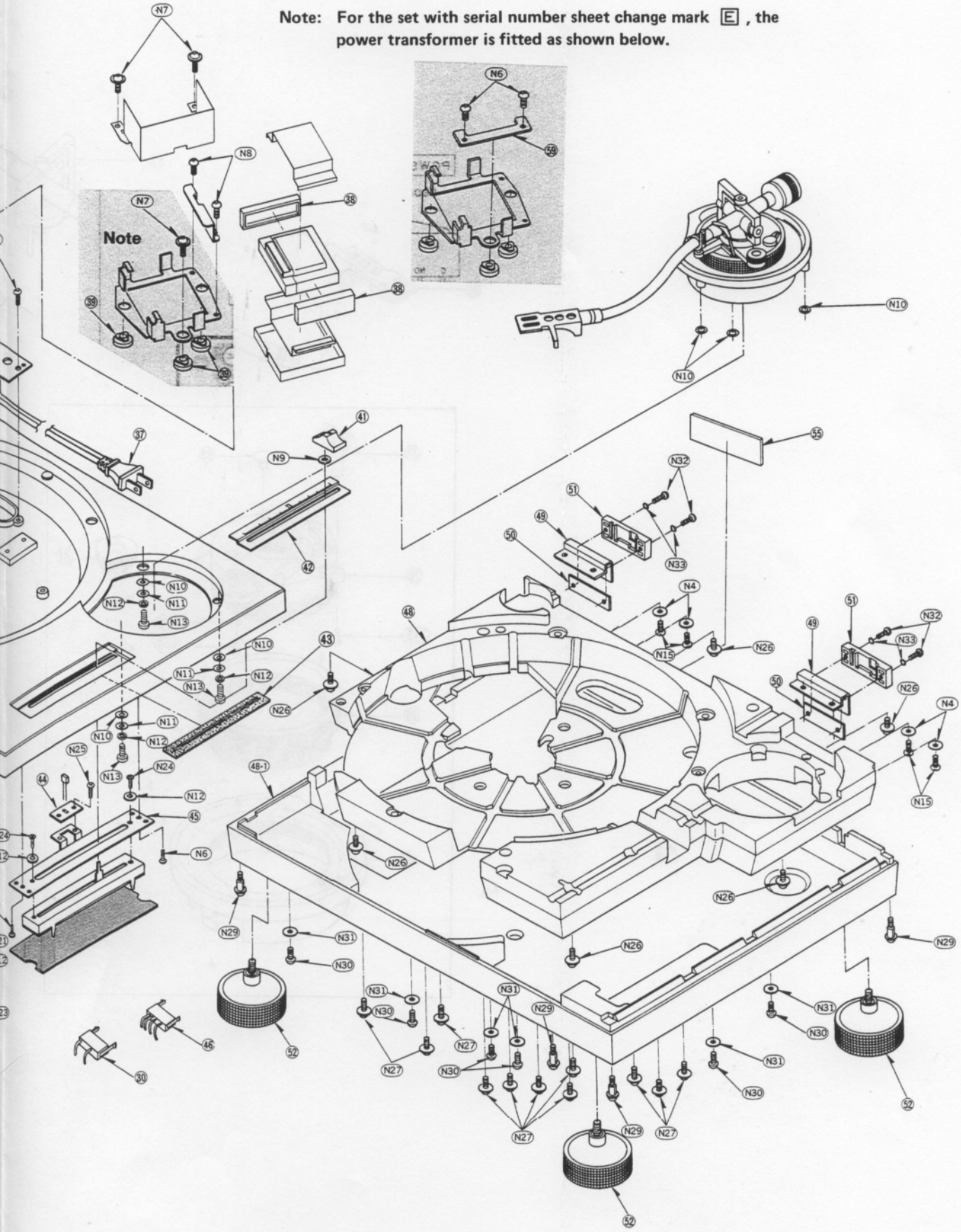

- **Tonearm Parts**

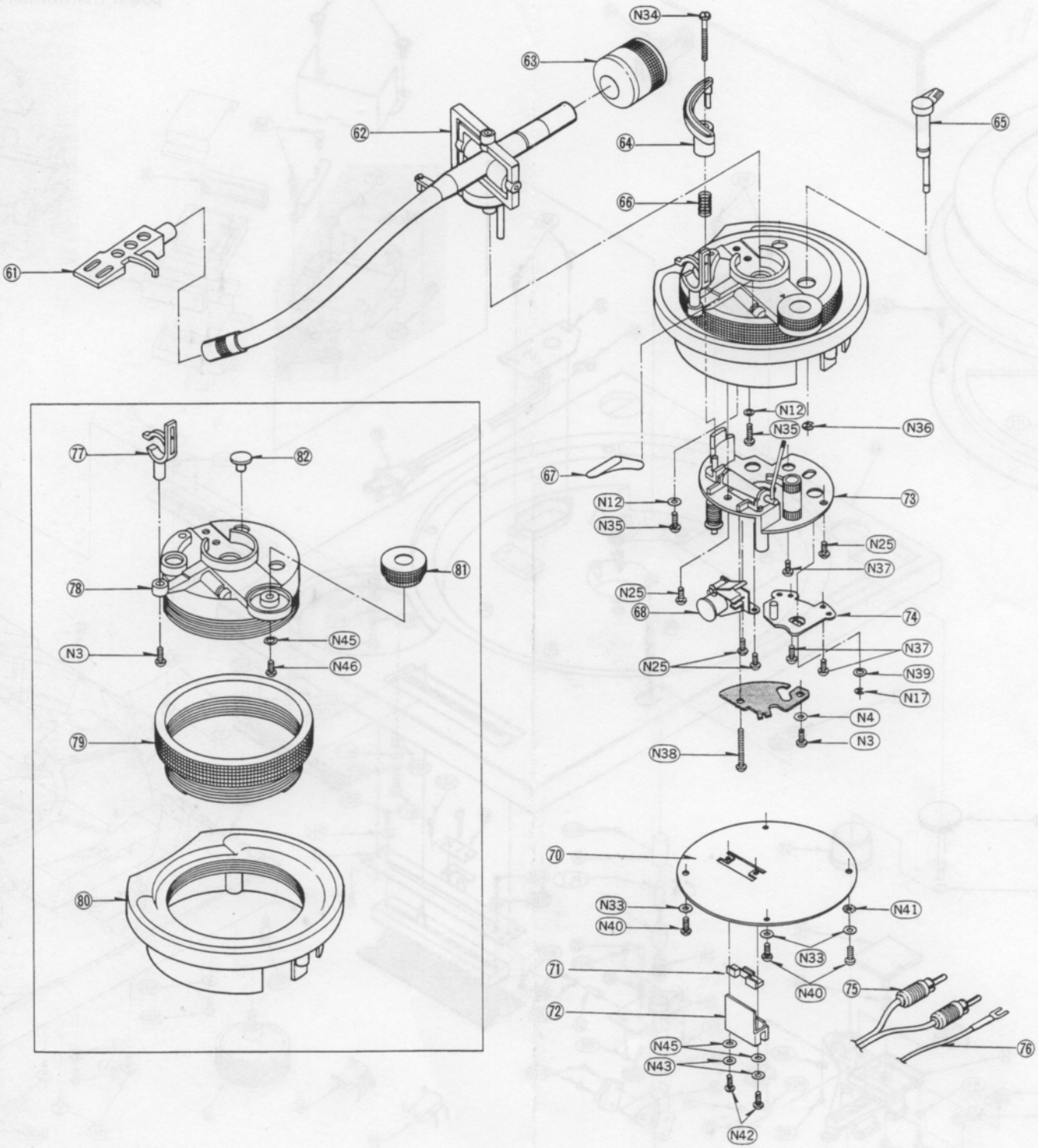

■ CIRCUIT BOARD AND WIRING CONNECTION DIAGRAM

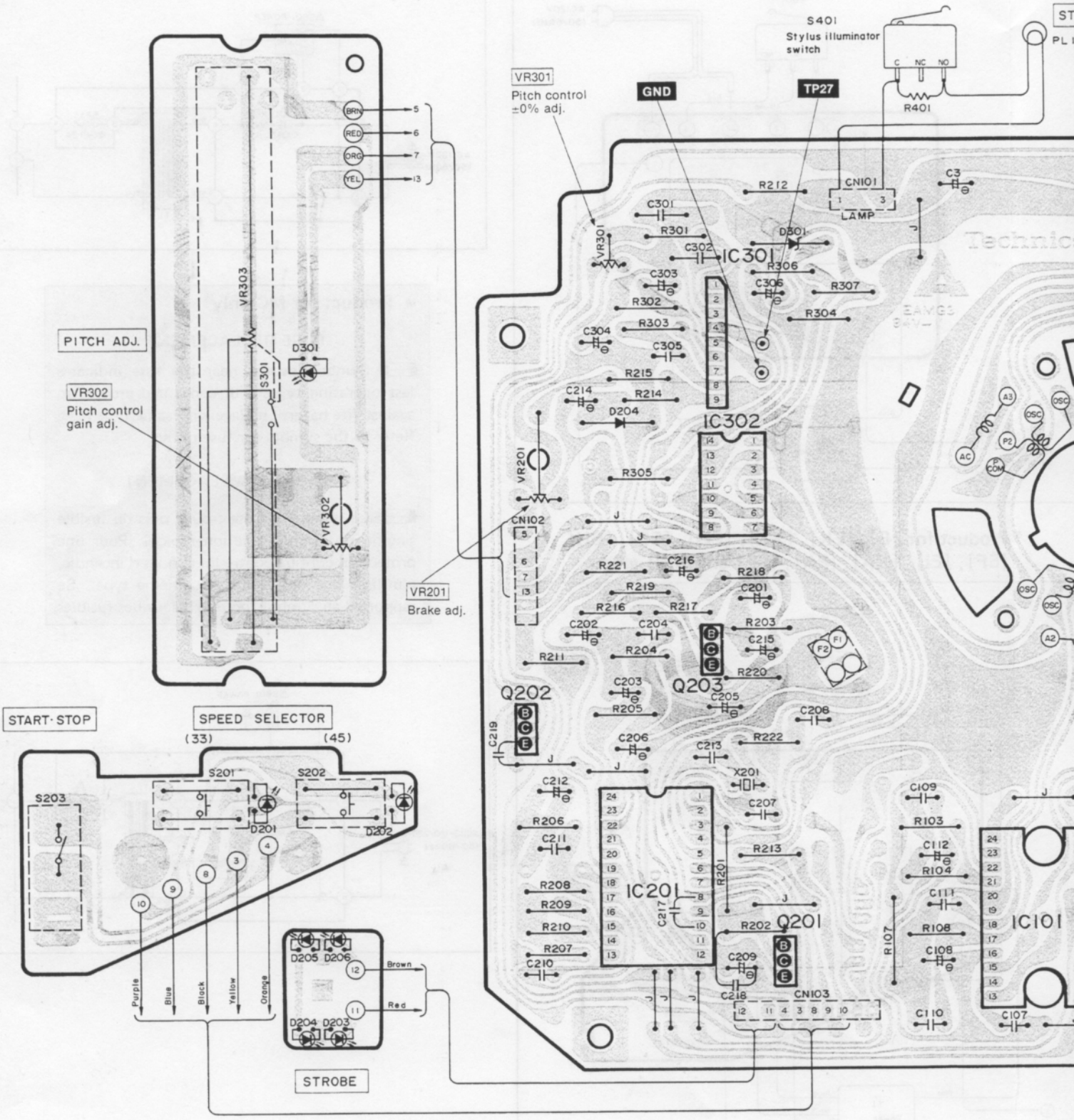

• Power source circ

* Product for Car

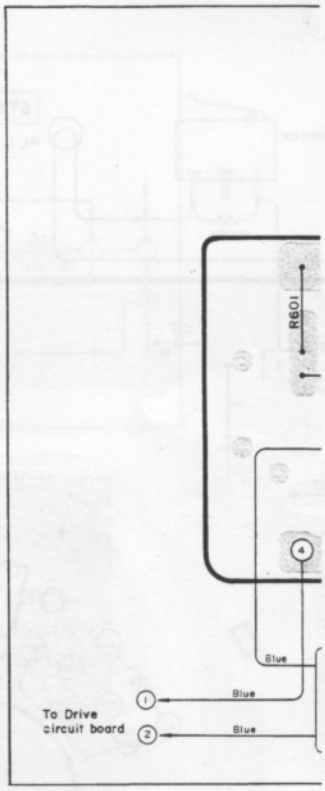

STYLUS ILLUMINATOR

PL1

Product for U.S.A.

POWER

S601

AC 120V 50/60Hz

C NO NC

Blue Brown Red

R601

C601

Q1

Q2

Q3

D1 D2

R1 R2 R3 R4 R5

R101 R102 R105 R106 R109 R110

C101 C102 C103 C104 C105 C106 C1 C2 C5 C6

T1 Power transformer

Blue Red Red Red

* Product for [E], [EF], [Ei], [XA]

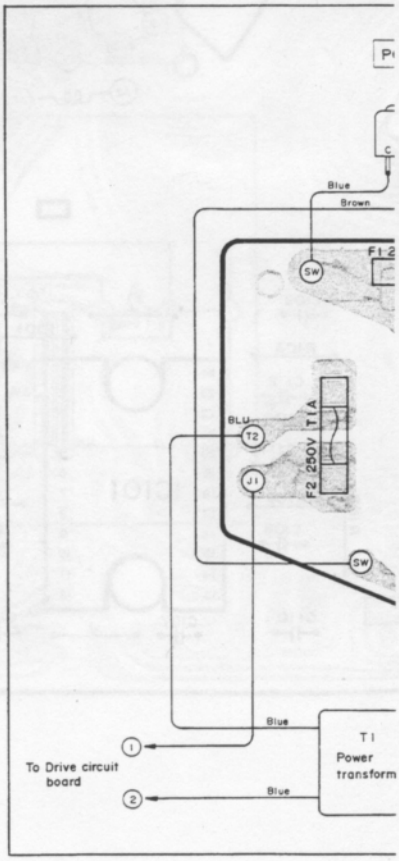

Power source circuit

*** Product for Canada**

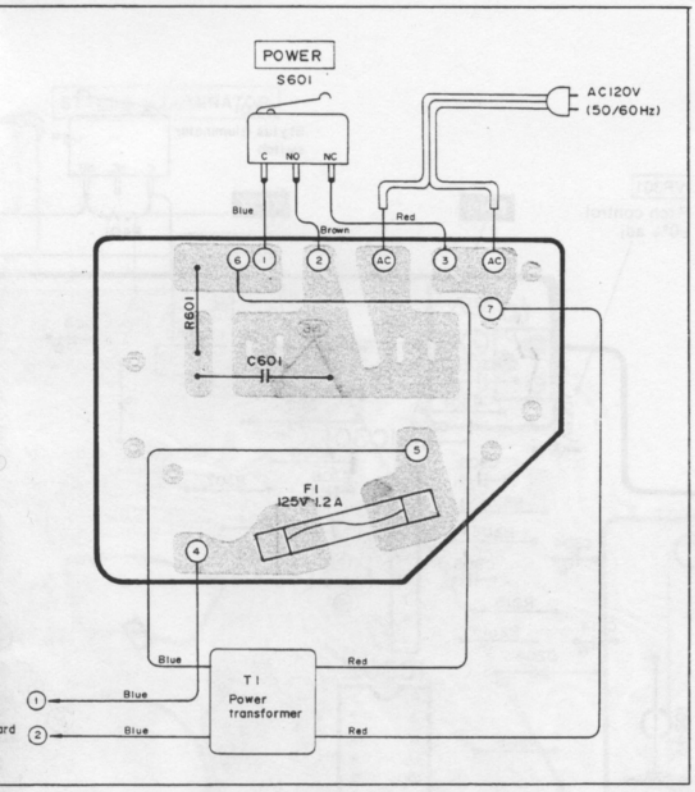

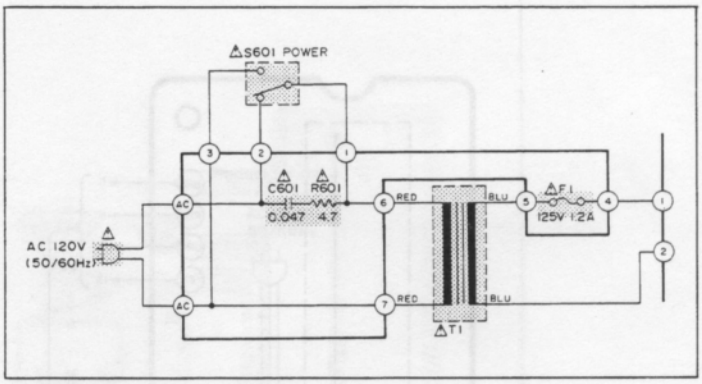

- **Product for MC only**

FUSE REPLACEMENT

Symbol located near the fuse indicates fast operating type. For continued protection against fire hazard, replace with same type fuse. Refer to the symbol for fuse rating.

FUSIBLE REMPLACEMENT

Le symbole qui se trouve près du fusible singifie un fusible à action rapide. Pour une protection contiue contre les risques d'incendie, n'utiliser que des fusibles du même type. Se rapporter au symbole pour la valeur des fusibles.

Product for [E], [EK], [XL], [EG], [EB], [EH] [EF], [Ei], [XA], [PA], [PE] and [PC] areas

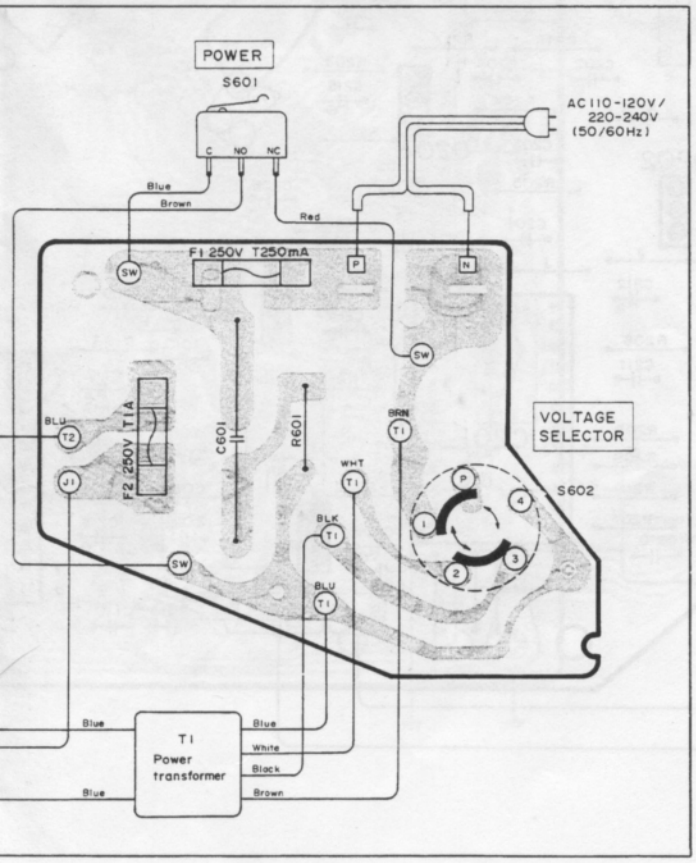

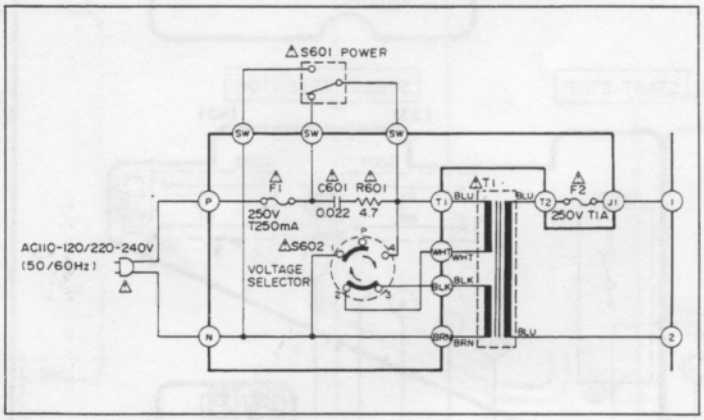

■ SCHEMATIC DIAGRAM

(This schematic diagram may be modified at any time with the development of new technology.)

Notes:

1. **S201, 202** : Speed selector switch.
2. **S203** : Start/stop switch.
3. **S301** : Pitch control reset switch in "**off**" position.
4. **S401** : Stylus illuminator switch in "**off**" position.
5. **S601** : Power switch in "**on**" position.
6. **S602** : Voltage selector in "**220 – 240**" position.
7. The voltage value, and waveforms are the reference voltage values of this unit measured by DC electronic voltmeter (high-impedance) and oscilloscope on the basis of chassis. Therefore, the voltage value and waveform may include some error due to the internal impedance of the tester or the measuring set.
   * [ ] is the voltage when turntable is in stop.
   * ( ) is the voltage when turntable is in rotation. (at 33 rpm)
8. ———— +B voltage lines.
9. Important safety notice.
   Components identified by ⚠ mark have special characteristics important for safety. When replacing any of these components, use only manufacturer's specified parts.
10. The part No. of diodes mentioned in the schematic diagram stand for production part No. Regarding the part No. with ✪ mark the production part No. are different from the replacement part No. Therefore, when placing an order for replacement part, please use the part No. in the replacement parts list.

IMPORTANT SAFETY NOTICE

The shaded area on this schematic diagram incorporates special features important for protection from fire and electrical shock hazards.
When servicing it is essential that only manufacturer's specified parts be used for the critical components in the shaded areas of the schematic.

• Terminal guide of transistors, diodes and IC's

AN6675	AN6680	AN6682	SVDS1RBA20F
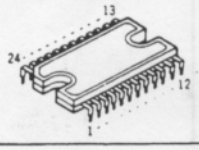	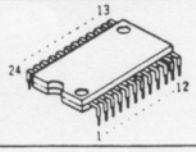	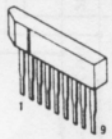	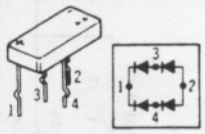
MN4011B 14 Pin 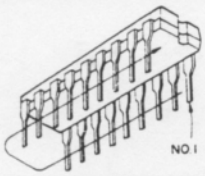		2SD1265 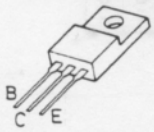	MA150 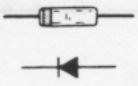
2SC1328 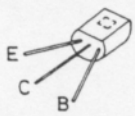	2SC1846 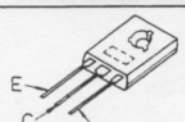	2SD637 2SB641 2SD636 2SB643 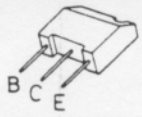	MA1051 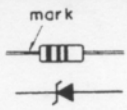
SVDPR3902S-9 SVDSLH54VT3 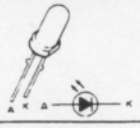	SVDGL-9PG2 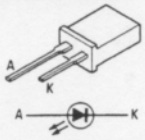		

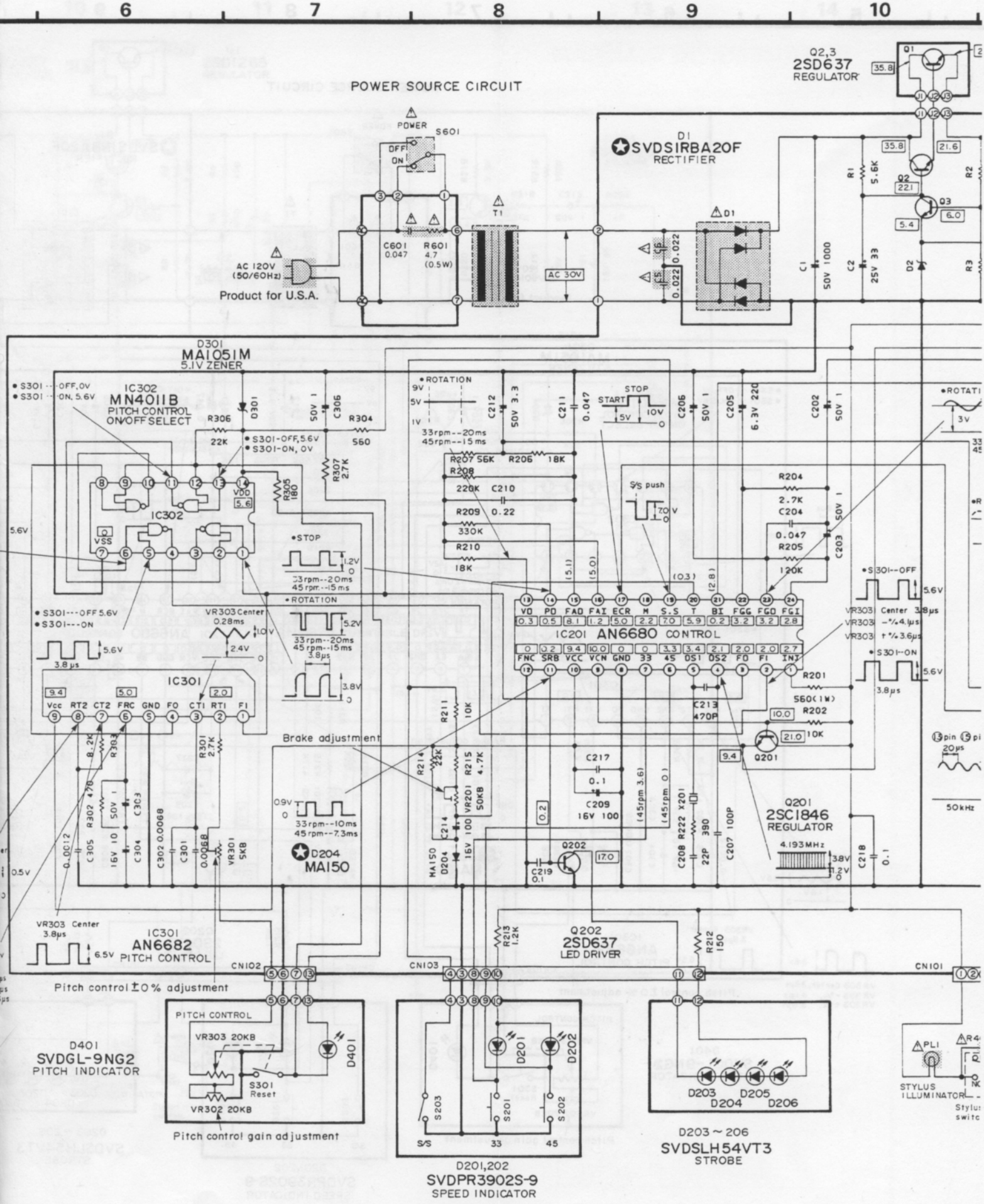
POWER SOURCE CIRCUIT
Q2,3
2SD637
REGULATOR
D1
SVDSIRBA20F
RECTIFIER
POWER
S601
OFF
ON
C601
0.047
R601
4.7
(0.5W)
T1
AC 120V
(50/60Hz)
Product for U.S.A.
AC 30V
C5
0.022
C6
0.022
C1
50V 1000
C2
25V 33
D2
R3
R1
5.6K
R2
Q2
Q3
D301
MA1051M
5.1V ZENER
IC302
MN4011B
PITCH CONTROL
ON/OFF SELECT
S301 ---OFF, 0V
S301 ---ON, 5.6V
R306
22K
R304
560
R307
2.7K
R305
180
VDD
VSS
IC301
Vcc RT2 CT2 FRC GND FO CTI RTI FI
IC301
AN6682
PITCH CONTROL
Pitch control ±0% adjustment
Brake adjustment
D204
MA150
IC201 AN6680 CONTROL
VD PD FAD FAI ECR M S.S T BI FGG FGD FGI
FNC SRB VCC VCN GND 33 45 OS1 OS2 FO FI INI
R207 56K
R206 18K
R208
220K
C210
0.22
R209
330K
R210
18K
R204
2.7K
C204
0.047
R205
120K
C203
R201
560(1W)
R202
10K
C213
470P
Q201
2SC1846
REGULATOR
4.193MHz
Q202
2SD637
LED DRIVER
R213
1.2K
R212
150
C217
0.1
C209
16V 100
C219
0.1
C218
0.1
C207 100P
C208 R222 X201
22P 390
CN102
CN103
CN101
PITCH CONTROL
VR303 20KB
VR302 20KB
S301
Reset
D401
D401
SVDGL-9NG2
PITCH INDICATOR
Pitch control gain adjustment
D201
D202
S203
S201
S202
S/S
33
45
D201,202
SVDPR3902S-9
SPEED INDICATOR
D203
D205
D204
D206
D203 ~ 206
SVDSLH54VT3
STROBE
PL1
STYLUS
ILLUMINATOR

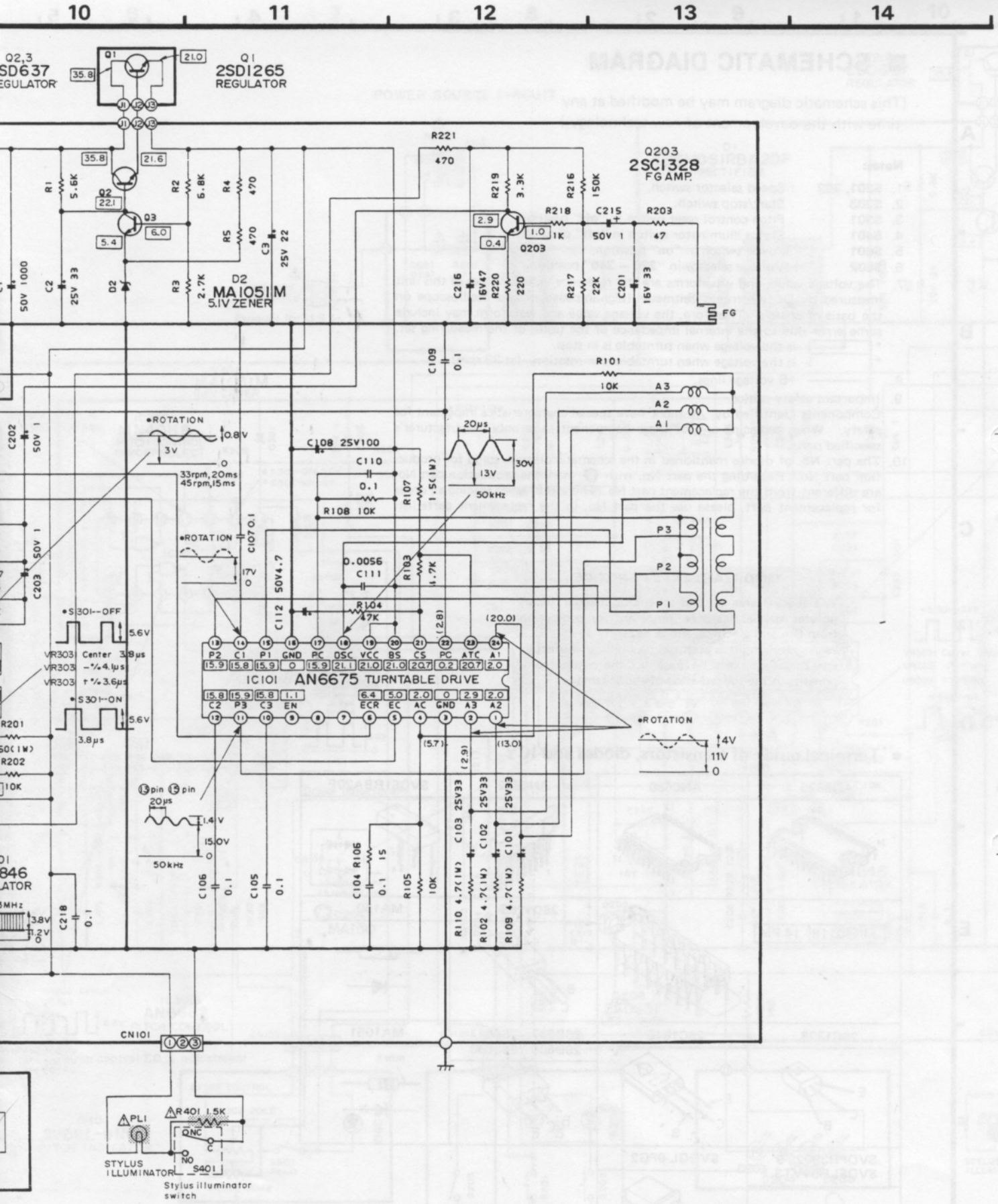
10
11
12
13
14
Q2,3
SD637
EGULATOR
Q1
2SD1265
REGULATOR
Q203
2SC1328
FG AMP.
D2
MA1051M
5.1V ZENER
IC101
AN6675 TURNTABLE DRIVE
P2 C1 P1 GND PC OSC VCC BS CS PC ATC A1
C2 P3 C3 EN ECR EC AC GND A3 A2
•ROTATION
•S301--OFF
•S301--ON
VR303 Center 3.9μs
VR303 -°/₀4.1μs
VR303 +°/₀3.6μs
13pin 15pin
20μs
50kHz
R221 470
R219 3.3K
R216 150K
R218 1K
C215 50V 1
R203 47
R101 10K
A3
A2
A1
P3
P2
P1
C108 25V100
C110 0.1
R108 10K
R107 1.5(1W)
C109 0.1
C107 0.1
C112 50V4.7
0.0056 C111
R103 4.7K
R104 47K
C106 0.1
C105 0.1
C104 R106 0.1 15
R105 10K
C103 25V33
C102 25V33
C101 25V33
R110 4.7(1W)
R102 4.7(1W)
R109 4.7(1W)
C218 0.1
CN101
PL1
R401 1.5K
STYLUS ILLUMINATOR
S401
Stylus illuminator switch
FG

■ BLOCK DIAGRAM

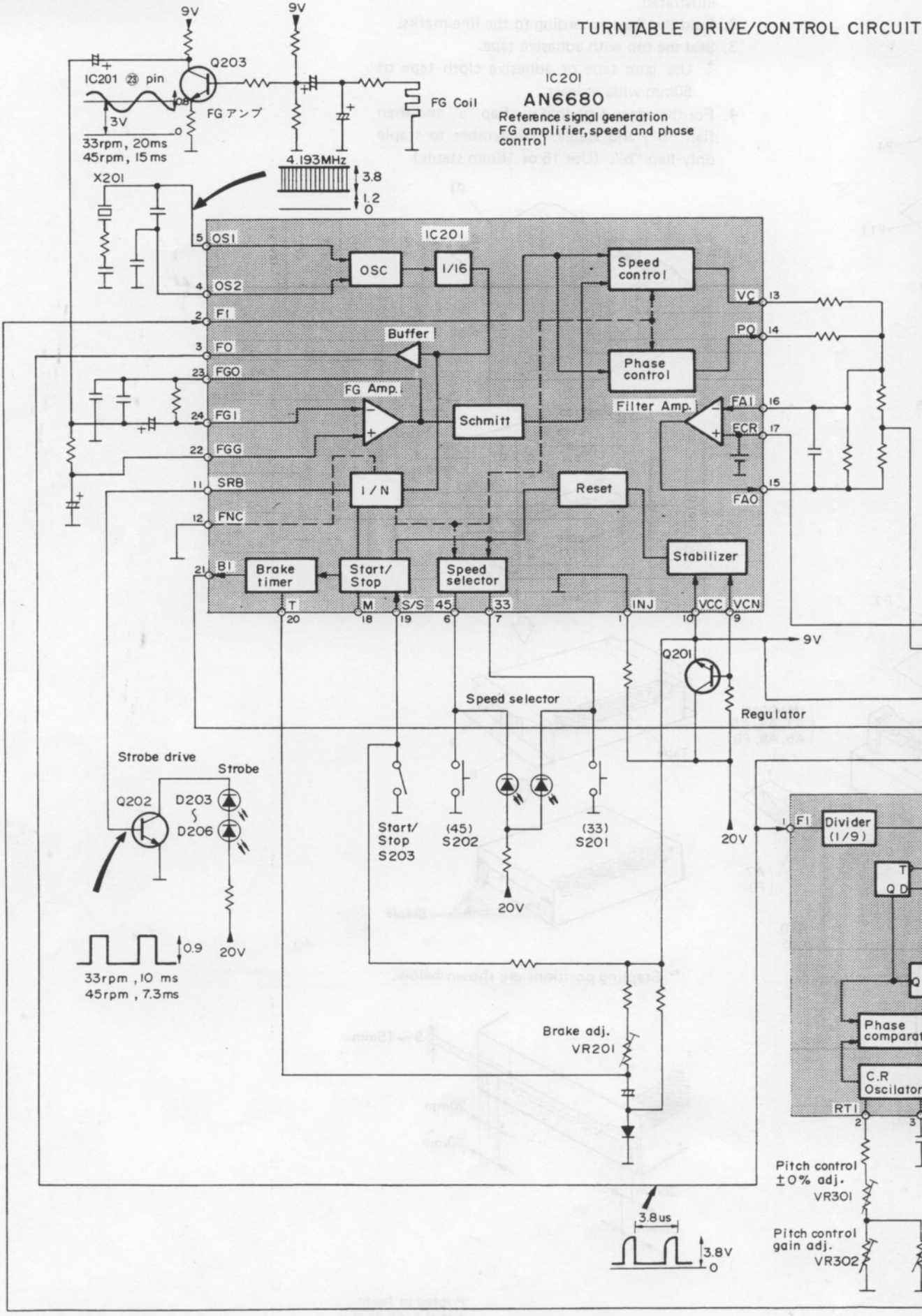

CIRCUIT

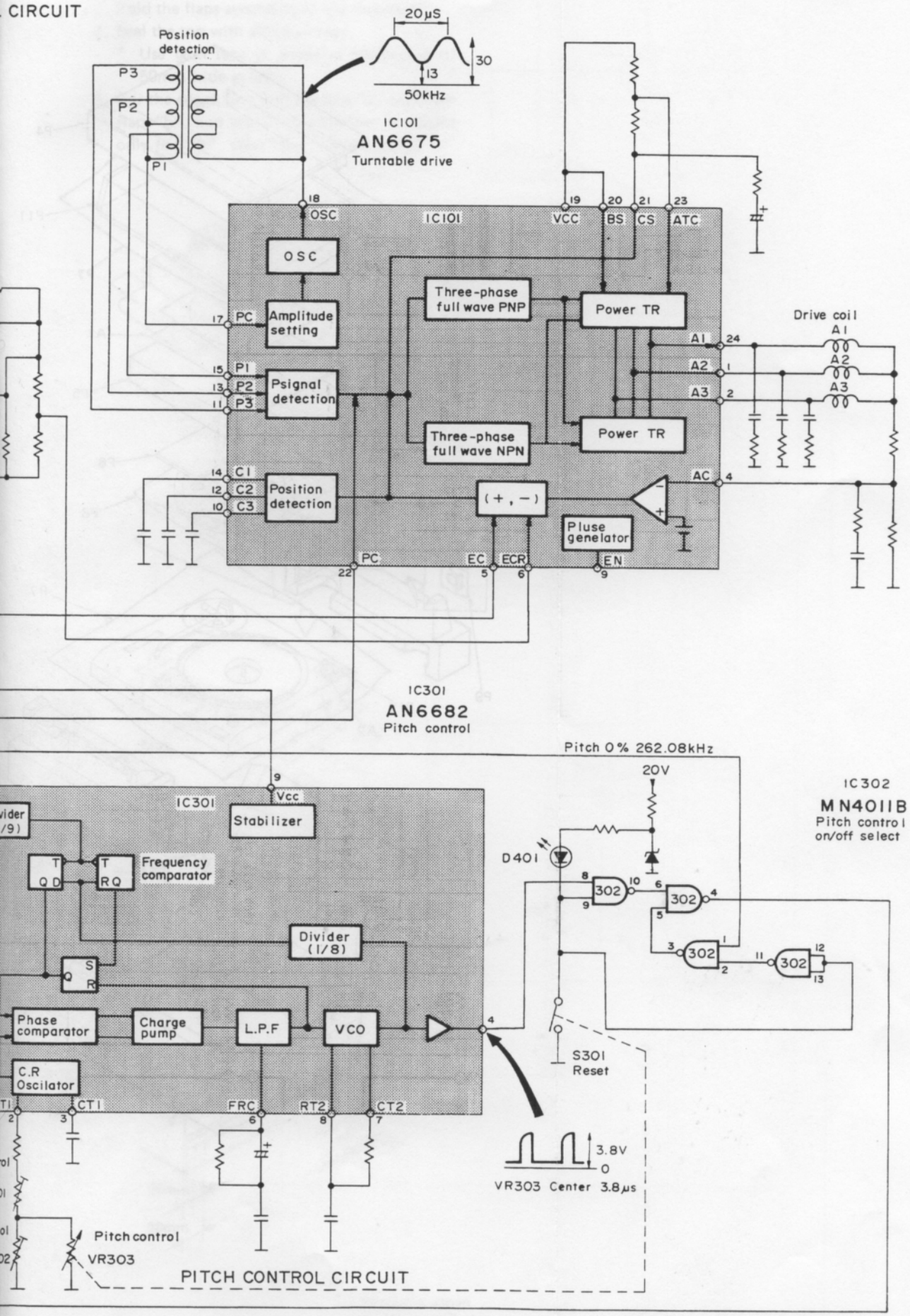
Position detection
P3
P2
P1
20μS
30
13
50kHz
IC101
AN6675
Turntable drive
18
OSC
IC101
19
VCC
20
BS
21
CS
23
ATC
OSC
Amplitude setting
Psignal detection
Position detection
Three-phase full wave PNP
Three-phase full wave NPN
Power TR
Power TR
17
PC
15
P1
13
P2
11
P3
14
C1
12
C2
10
C3
(+, −)
Pluse genelator
PC
22
EC
5
ECR
6
EN
9
A1
24
A2
1
A3
2
AC
4
Drive coil
A1
A2
A3
IC301
AN6682
Pitch control
Pitch 0% 262.08kHz
20V
IC302
MN4011B
Pitch control on/off select
9
Vcc
IC301
Stabilizer
Frequency comparator
Divider (1/8)
Phase comparator
Charge pump
L.P.F
VCO
C.R Oscilator
CT1
FRC
RT2
CT2
D401
302
S301
Reset
3.8V
0
VR303 Center 3.8μs
Pitch control
VR303
PITCH CONTROL CIRCUIT

■ PACKING

1. Plase the unit (with cushions attached) as illustrated.
2. Fold the flaps according to the line marks.
3. Seal the top with adhesive tape.
   * Use gum tape or adhesive cloth tape of 50mm wide at least
4. For the edges, first fold the flap "a" and then flap "b", and staple. Remember to staple only flap "b". (Use 15 or 16mm staple)

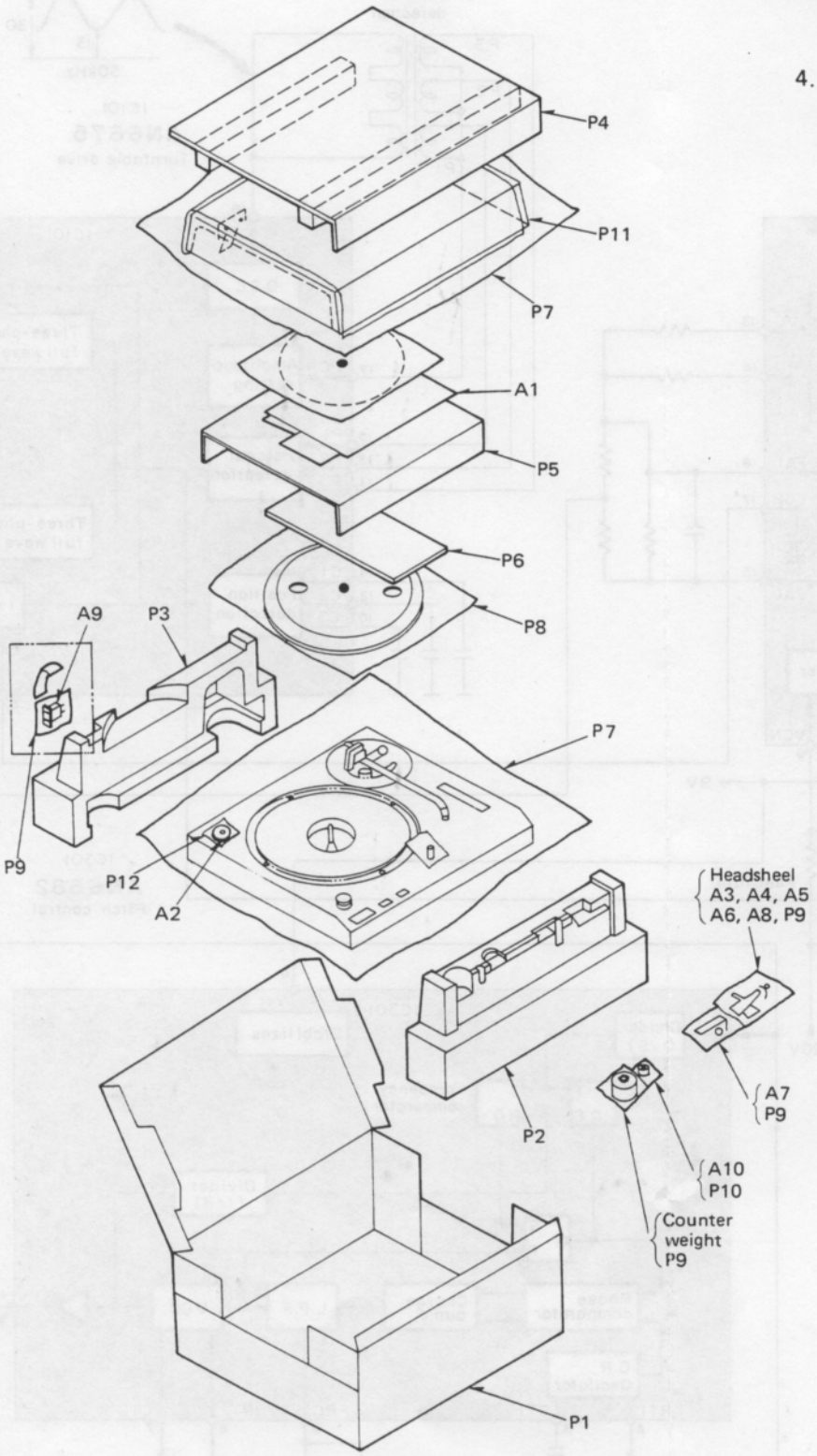

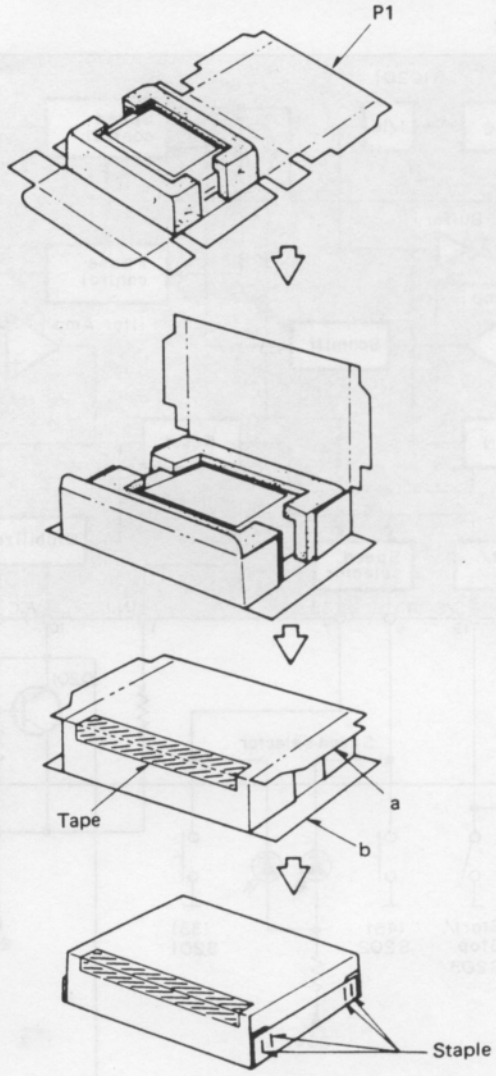

* Stapling positions are shown below.

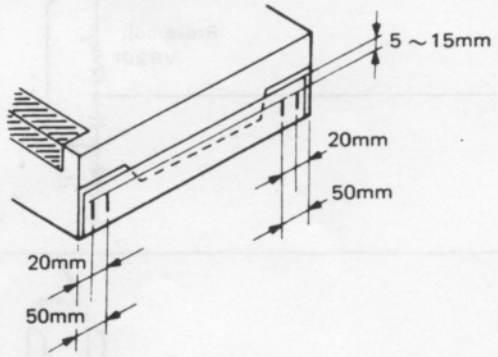

Printed in Japan
840412450 Ⓗ T.K.

ORDER NO. SD8007-1778

Service Manual

Turntable System

SL-1210MK2

[XG], [E]

Areas

* [XG] is available in European.
* [E] is available in Scandinavia.

For additional information, Please refer to the service manual for Model No. SL-1200MK2 [XG, XA, XGB, XAL, E]

Notes:
* This service manual included only the change of the **SL-1200MK2 [XG, XA, XGB, XAL, E]** service manual (ORDER NO. SD7909-1622)
* When servicing model **SL-1210MK2 [XG, E]**, this service manual and **SL-1200MK2** (ORDER NO. 7909-1622) service manual should be used together.

CHANGES

■ REPLACEMENT PARTS LIST

Ref. No.	Change of Part No. SL-1200MK2 [XG, XA, XGB, XAL, E]	➡ SL-1210MK2 [XG, E]	Part Name & Description	Per Set (Pcs.)	Remarks
		CABINET and CHASSIS PARTS			
10	SFAC122–01	SFAC124S01	Cabinet (Black)	1	○
35	SFSR4N4	SFSR4N4	Clamper, AC Cord	1	
	SFHK040L [XAL] only				
36	SFUP025X01	SFUP025X01	Blacket, AC Cord	1	
	SFUP025–01 [XAL] only				
37	RJA23ZC	SJA88	AC Cord	1	
	QFC1208M [XAL] only				
42	SFKK122–03	SFKK124S01	Ornament, Pitch Control Volume	1	
55	SFNN122N01	SFNN124Q01 [XG]	Name Plate	1	○
	SFNN122L01 [XAL] only				
	SFNN122S01 [E] only	SFNN124S01 [E]	Name Plate	1	○
		TONE ARM and ARM BASE PARTS			
62	SFPAM18201K	SFPAM18202K	Tone Arm Ass'y	1	○
82	SFGK132–01	SFGK133S01	Cap, Rubber	1	
		PACKING PARTS			
P1	SFHP122M01	SFHP124S01	Carton Box	1	○

Technics

Matsushita Electric Trading Co., Ltd.
P.O. Box 288, Central Osaka Japan

■ REPLACEMENT PARTS LIST (Mechanical)

Notes: 1. Part numbers are indicated on most mechanical parts.
Please use this number for parts orders.
2. ⚠ indicates that only parts specified by manufacturer be used for safety.

Ref. No.		Part No.	Part Name & Description
CABINET and CHASSIS PARTS			
1		SFAD122-01A	Dust Cover
2		SFTG172-01	Turntable Mat
3		SFTE172-01Z	Turntable
4		SFUM172-05	Cover, Turntable
5		SFMGQ20-01	Cover, Stater Frame Ass'y
6		SFMG520-31A	Stater Frame
7		SFMZ172-01E	FG Detector Coil Ass'y
8		SFMZQ20-01A	Shaft, Stater Frame Ass'y
9		SFUP122-12	Plate, Shield
10		SFAC124S01	Cabinet
11		SFUM172-04	Ornament, Stylus-illuminator
12		SFKT122-01	Knob, Power Switch
13		SFKK122-01E	Case, Strobe-illuminator
14		SFKT015-06	Knob, Start/Stop Switch
15		SFQA122-01	Spring, Start/Stop Knob
16		SFUM122-01	Base, Operation
17		SFKT015-01E	Knob, Speed Selector (33-1/3 r.p.m.)
18		SFDJ122-02E	Connector, 7-PIN
19		SFGZ122-01	Spacer, Rubber (Speed Selector)
20		SFYB5-32	Ball, Switch Cam
21		SFQA520-01	Spring, Switch Cam
22		SFUM122-03	Cam, Switch
23		SFUM015-11	Spacer, LED
24		SFKK172-01	Cover, Lamp
25		SFXB122-02	Boss, Drive
26		SFQA172-01	Spring, Drive Boss
27		SFXJ172-01	Pin, Lock Canceler
28		SFUP122-02E	Bracket, Stylus-illuminator
29		SFUP122-03	Plate, Lock OPeration
30		SFDJ122-03E	Connector, 3-PIN
31		SFXO172-01	Pin, Guide
32		SFQA520-01	Spring, Lock Canceler Pin
33		SFQA001-02	Spring, Lock Operating Plate M'tg
34		SFXJ172-05	Pin, Lock Operating Plate M'tg
35		SFSR4N4	Clamper, AC Cord
36		SFUP025X01	Bracket, AC Cord
37	⚠	SJA88	AC Cord
38		SFUP132-03	Bracket, Power Transformer
39		SFGC122-01	Cushion, Power Transformer
40		SFUP122-10	Spacer, Power Transformer
41		SFKT122-02	Knob, Pitch Control Volume
42		SFKK124S01	Ornament, Pitch Control Volume
43		SFUZ122-01	Shading Cloth, Pitch Control Volume
44		SFUP122-09	Holder, LED
45		SFUP122-01	Bracket, Pitch Control Volume
46		SFDJ122-01E	Connector, 4-PIN
47		SFUP122-13	Supporter, Bottom Base
48		SFAU122-01	Base, Bottom
49		SFUP122-05	Supporter (A), Hinge
50		SFUP122-04	Supporter (B), Hinge
51		SFUM170-07	Case, Hinge
52		SFGC122-02E	Audio Insulator
53		SFUP122-06	Supporter (C), Hinge
54		SFKT015-02E	Knob, Speed Selector (45 r.p.m)
55 [XG]		SFNN124Q01	Name Plate
55 [E]		SFNN124S01	Name Plate
56		SFXO122-01	Pipe (A)
57		SFXO122-02	Pipe (B)
58		SFAT122-01A	Hinge Ass'y
TONE ARM and ARM BASE			
61		SFPCC31001K	Head Shell
62		SFPAM18202K	Tone Arm Ass'y
63		SFPWG17201K	Balance Weight Ass'y
64		SFPRT18201K	Lift Ass'y
65		SFPZB17202	Knob, Arm Base Lock
66		SFQA829-03	Spring, Lift Ass'y
67		SFPAB13202	Knob, Arm Lift
68		SFPJL18202K	Oil Damper
70		SFPZB12203	Plate, Arm Base Cover
71		SFUM170-06	Spacer, Phono Cord
72		SFPZB12204	Clamper, Phono Cord
73		SFPAB18201K	Tone Arm Fixing Plate Ass'y

Ref. No.		Part No.	Part Name & Description
74		SFPZB12201K	Plate, Position Fix
75		SFDH028-01	Phono Cord
76		SFEL028-01E	Ground Wire
77		SFPRT17201K	Arm Rest
78		SFPKD17203	Arm Base
79		SFPKB17201S	Ring, Arm Base Operation
80		SFPKD12201	Bracket, Arm Base
81		SFPAB17206	Knob, Anti-skate Force Control
82		SFGK133S01	Cap, Rubber
SCREWS, WASHERS and CIRCLIPS			
❶		**XTN3+8BFZ**	Screw
❷		SFXGQ20-02	Screw
❸		**XTN3+8B**	Screw
❹		**XTN26+6B**	Screw
❺		**XTN4+10B**	Screw
❻		**XWA4B**	Washer
❼		**XUC3FT**	Circlip
❽		**XUC2FT**	Circlip
❾		**XUC25FT**	Circlip
❿		SFXW910J02	Washer
⓫		**XTN3+40BFZ**	Screw
⓬		**XSN3+10BVS**	Screw
⓭		XWE3F12FZ	Washer
⓮		**XTN3+25BFZ**	Screw
⓯		SFXW122-01	Washer
⓰		**XWE3E10**	Washer
⓱		SFPEW1100	Washer
⓲		SFPEW11003	Washer
⓳		**XSN3+8S**	Screw
⓴		SFXG172-01	Screw
㉑		**XTV3+8BFN**	Screw
㉒		**XTN3+10B**	Screw
㉓		**XTN2+10B**	Screw
㉔		XSN17+3FY	Screw
㉕		**XSN3+14S**	Screw
㉖		SFXW172-04	Washer
㉗		XUB14FT	Circlip
㉘		SFUZ172-05	O Ring
㉙		**XTN3+6B**	Screw
㉚		**XSN3+6S**	Screw
㉛		**XWA3BFZ**	Washer
㉜		**XWA3B**	Washer
㉝		**XWG3**	Washer
㉞		SFXG829-1	Screw
㉟		**XUC5FT**	Circlip
㊱		**XTW3+6B**	Screw
㊲		**XTV3+6BFN**	Screw
㊳		**XWE4A10EW**	Washer
㊴		**XTN3+25B**	Screw
㊵		XYN3+C6FZS	Screw
㊶		**XSN3+12BVS**	Screw
㊷		SFPEW17201	Washer
㊸		XWG26	Washer
ACCESSORIES			
A1 [XG]		SFNU122X01	Instruction Book
A1 [E]		SFNU122S01	Instruction Book
A2		SFWE010	Adaptor, 45 r.p.m.
A3		SFPEN3302	Nut, Cartridge
A4		SFPEW9601	Washer, Cartridge
A5		SFCZV8801	Screw, Cartridge
A6		SFPEV9801	Screw, Cartridge
A7		SFKO135-01	Overhang Gauge
A8		SFPZB3501	Shell Weight
PACKINGS			
P1		SFHP124S01	Carton
P2		SFHH122-01	Pad, Front
P3		SFHH122-02	Pad, Rear
P4		SFHD122-01	Pad, Top
P5		SFHD122-02	Pad, (A), Turntable
P6		SFHD122-03	Pad, (B), Turntable
P7		SFYH60X60	Polyethylene Cover, Turntable Unit and Dust Cover
P8		SFYH40X45	Polyehtylene Cover, Turntable

Printed in Japan
80073350 ⓐ A.M.

ORDER NO. SD7909-1622

Service Manual

SL-1200MK2

Turntable System

SL-1200MK2

(XG), (XA), (XGB)
(XAL), (E)

* The model SL-1200MK2 (XG) is available in European only.
* The model SL-1200MK2 (XA) is available in Asia, Latin America, Middle East and Africa only.
* The model SL-1200MK2 (XGB) is available in Belgium only.
* The model SL-1200MK2 (XAL) is available in Australia only.
* The model SL-1200MK2 (E) is available in Scandinavia only.

SPECIFICATIONS

(Specifications subject to change without notice. Weight and dimensions shown are approximate.)

General

Power supply:	~110–120/220–240, 50 or 60 Hz
Power consumption:	13.5 W
Dimensions: (W x H x D)	45.3 x 16.2 x 36 cm (17-27/32" x 6-19/64" x 14-11/64")
Weight:	12.5 kg (27.6 lb)

Turntable section

Type:	Quartz direct drive Manual turntable
Drive method:	Direct drive
Motor:	Brushless DC motor
Turntable platter:	Aluminum diecast Diameter 33.2 cm (13-5/64") Weight 2 kg (4.4 lb)
Turntable speeds:	33-1/3 rpm and 45 rpm
Starting torque:	1.5 kg.cm (1.3 lb .in)
Build-up characteristics:	0.7 s. from standstill to 33-1/3 rpm
Braking system:	Electronic brake
Wow and flutter:	0.01% WRMS* 0.025% WRMS (JIS C5521) ±0.035% peak (IEC 98A Weighted)

* This rating refers to turntable assembly alone, excluding effects of record, cartridge or tonearm, but including platter. Measured by obtaining signal from built-in frequency generator of motor assembly.

Rumble:	–56 dB (IEC 98A Unweighted) –78 dB (IEC 98A Weighted)

Tonearm section

Type:	Universal
Effective length:	230 mm(9-1/16")
Arm height adjustment range:	0–6 mm
Overhang:	15 mm (19/32")
Effective mass:	12 g (without cartridge)
Offset angle:	22°
Friction:	Less than 7 mg (lateral, vertical)
Tracking error angle:	Within 2°32' (at the outer groove of 30 cm (12") record
Stylus pressure adjustment range:	Within 0°32' (at the inner groove of 30 cm (12") record 0–2.5 g
Applicable cartridge weight range:	6–10 g 13.5–17.5 g (including headshell)
(with auxiliary weight):	9.5–13 g 17–20.5 g (including headshell)
(with shell weight)	3.5–6.5 g 11–14 g (including headshell)
Headshell weight:	7.5 g

Cartridge section

Model No.	EPC-207C
Type:	Moving magnet
Frequency response:	20 Hz to 25 kHz 20 Hz to 15 kHz ±2 dB
Output voltage:	3 mV at 1 kHz 5 cm/s. zero to peak lateral velocity [8.5 mV at 1 kHz 10 cm/s. zero to peak 45° velocity (DIN 45500)]
Channel separation:	25 dB at 1 kHz
Channel balance:	Within 2 dB at 1 kHz
Compliance (dynamic):	10 x 10^6 cm/dyne at 100Hz
Stylus pressure:	1.75 ±0.25 g (17.5 ±2.5 mN)
Load impedance:	47 kΩ to 100 kΩ
Weight:	5.6 g (cartridge only)
Replacement stylus:	EPS-207ED (Elliptical stylus)

Technics

Matsushita Electric Trading Co., Ltd.
P.O. Box 288, Central Osaka Japan

TECHNISCHE DATEN

Allgemeine Daten

Stromversorgung:	~110-120/220-240 V, 50/60 Hz Wechselstrom
Leistungsaufnahme:	13,5 W
Abmessungen (B x H x T):	45,3 x 16,2 x 36 cm
Gewicht:	12,5 kg

Plattenspieler

Typ:	Manueller Quarz-Direktantrieb Plattenspieler
Antrieb:	Direktantrieb
Motor:	Kollektorloser Gleichstrommotor
Plattenteller:	Aluminium-Spritzguß Durchmesser 33,2 cm Gewicht 2 kg
Plattenteller-Drehzahlen:	33-1/3 und 45 U/min
Anlaufdrehmoment:	0,7 sec vom Stillstand auf 33-1/3 U/min
Bremssystem:	Elektronische Bremse
Gleichlaufschwankungen:	0,01% WRMS* 0,25% WRMS (JIS C5521) ±0,035% Spitze (IEC 98A bewertet)

Diese Nennleistung bezieht sich auf das Laufwerk-Bauteil allein, ausschließlich Einflüsse von Schallplatte, Tonabnehmer order Tonarm, aber einschließlich Plattenteller. Gemessen anhand von Signalen vom eingebauten Frequenzgenerator des Motorbauteils.

Rumpel-Geräuschspannungsabstand:	−56 dB (IEC 98A unbewertet) −78 dB (IEC 98A bewertet)

Tonarm

Typ:	Universal-Tonarm
Effektive Länge:	230 mm
Tonarmhöhe-Einstellbereich:	0–6 mm
Überhang:	15 mm
Effektive Masse:	12 g (ohne Tonabnehmer)
Kröpfungswinkel:	22°
Lagerreibung:	Weniger als 7 mg (horizontal, vertikal)
Auflagekraft-Einstellbereich:	0–2,5 g
Zulässiger Ton-abnehmer-Gewichtbereich:	6–10 g 13,5–17 g (einschließlich Tonarmkopf)
(mit Zusatz-Gegengewicht):	9,5–13 g 17–20,5 g (einschließlich Tonarmkopf)
Gewichtbereich:	3,5–6,5 g
(mit Zusatzgewicht)	11–14 g (einschließlich Tonarmkfopf)
Tonarmkopf-Gewicht:	7,5 g

Tonabnehmer

Modell-Nummer:	EPC-207C
Typ:	Magnetischer Tonabnehmer
Frequenzgang:	20 Hz bis 25 kHz 20 Hz bis 15 kHz ±2 dB
Ausgangsspannung:	3 mV bei 1 kHz 5 cm/s. Null-zu-Spitze, lateral [8,5 mV bei 1 kHz 10 cm/s. Null-zu-Spitze, 45° (DIN 45500)]
Kanaltrennung:	25 dB bei 1 kHz
Kanalabweichung:	Innerhalb 2 dB bei 1 kHz
Nachgiebigkeit (dynamisch):	10 x 10^6 cm/dyn bei 100 Hz
Auflagekraft:	1,75 ±0,25 g (1,75 ±2,5 mN)
Impedanz:	47 kΩ bis 100 kΩ
Gewicht:	5,6 g (ohne Tonarmkopf)
Ersatznadel:	EPS-207ED (Elliptische Nadel)

Änderungen der technischen Daten vorbehalten.
Die angegebenen Gewichts-und Abmessungsdaten sind ungefähre Werte.

SPECIFICATIONS

Généralités

Alimentation:	Alternatif 110-120/220-240V, 50 ou 60 Hz
Consommation:	13,5W
(L x H x P)	
Poids:	12,5 kg

Platine de lecture

Type:	Entaînement direct à quartz Platine manuelle
Système d'entrainement:	Entraînement direct
Moteur:	Moteur C.C. sans balai
Plateau de lecture:	Aluminium moulé sous pression Diamètre 33,2 cm Poids 2 kg
Vitesses de rotation:	33-1/3 et 45 t/p.m
Couple de démarrage:	1,5 kg.cm
Caractéristiques d'augmentation:	0,7 s (rotation de 90°)à 33-1/3 t/p.m.
Système de freinage:	Frein électronique
Pleurage et scintillement:	0,01% de valeur efficace* 0,025% de valeur efficace (JIS C5521) ±0,035% de crête (IEC 98A Pondéré)

*
Ce régime nominal se rapporte à l'ensemble du tournedisqueseul, excluant les effets du disque, de la cellule pick-up ou de bras de lecture, mais comprenant le plateau. Mesuré par l'obtention d'un signal provenant du générateur de fréquences incorporé de lénsemble du moteur.

Ronflement:	−56 dB (IEC 98A Non pondéré) −78dB (IEC 98A Pondéré)

Bras de lecture

Type:	Bras de lecture universel
Longueur effective:	230 mm
Portée du réglage de la hauteur du bras:	0–6 mm
Porte-à-faux:	15 mm
Masse réele:	12 g (sans la cellule pick-up)
Angle d'erreur de piste:	En deçà de 2°32' au sillon extérieur d'un disque de 30 cm En deçà de 0°32' au sillon inérieur d'un disque de 30 cm
Angle de décalage:	22°
Frottement:	Moins de 7 mg (latéral et vertical)
Plage de réglage de la pression d'appui:	0–2,5 g
Gamme du poids de la cellule pick-up utilisable:	6–10 g 13,5–17,5 g (y compris la coque porte-cellule)
(avec contrepoids auxiliaire)	9,5–13 g 17–20,5 g (y compris la coque porte-cellule)
(avec contrepoids de la cellule)	3,5–6,5 g 11–14 g (y compris la coque porte-cellule)
Poids de la cellule:	7,5 g

Cellule pick-up

No. du modèle:	EPC-207C
Type:	Aimant mobile
Réponse en fréquence:	20 Hz à 25 kHz 20 Hz à 15 kHz ±2dB
Tension de sortie:	3 mV á 1 kHz; 5 cm/s. zéro à vitesse latérale de crête (8,5 mV à 1 kHz 10 cm/s., zéro à vitesse 45°de crête [DIN 45500])
Séparation de canal:	25 dB à 1 kHz
Equilibrage des canaux:	En deçà de 2 dB à 1 kHz
Elasticité (dynamique):	10 x 10^6 cm/dyne à 100 Hz
Pression de la pointe de lecture:	1,75 ±0,25 g (17,5 ±2,5 mN)
Impédance de charge:	47 kΩ to 100 kΩ
Poids:	5,6 grammes (cellule seule)
Pointe de lecture de remplacement:	EPS-207ED (Forme elliptique)

Les spécifications sont susceptibles d'être modifiées sans préavis.
Les poids et les dimensions donnés sont approximatifs.

■ CONTENTS

DISASSEMBLY PROCEDURE 3, 4
PARTS IDENTIFICATIONS 4
ARM BASE ASSEMBLING PROCEDURE 5
ADJUSTMENTS 6–8
SCHEMATIC DIAGRAM 9, 10
REPLACEMENT PARTS LIST (Electrical) 11
TROUBLE SHOOTING 12
PRINTED CIRCUIT BOARD 13, 14
BLOCK DIAGRAM 15, 16
ADJUSTMENTS (Electrical) 17
REFERENCE VOLTAGE AND WAVEFORM AT EACH IC PIN 17, 18
EXPLODED VIEWS 19, 20, 22
REPLACEMENT PARTS LIST (Mechanical) 21
FEATURES 23

■ DISASSEMBLY PROCEDURE

How to remove panel cover

1. Remove head shell and turntable.
2. Secure arm with arm clamp.
3. Remove 5 screws Ⓐ of the panel cover as shown in Fig. 1.

How to remove stater frame coil and F.G detector coil

4. Remove 3 connectors Ⓑ and 2 read wires Ⓒ from power transformer as shown in Fig. 2.
5. Remove 3 screws Ⓓ of the drive circuit board and 3 screws Ⓔ of the stater frame cover as shown in Fig. 2.
6. Disconnect 18 soldered parts Ⓕ of the stater coil and 4 soldered parts Ⓖ of the F.G detector coil as show in Fig. 3.
7. Remove 3 screws Ⓗ of the stater frame ass'y as shown in Fig. 3.

How to remove bottom base ass'y

8. Remove 4 audio insulators. **(Counterclockwise rotation)**
9. Remove 17 screws and spacer Ⓘ as show in Fig. 4.
10. Remove 11 screws Ⓙ as shown in Fig. 4.

How to remove stylus-illuminator lamp

11. Remove 2 screws Ⓚ of the stylus-illuminator lamp ass'y as shown in Fig. 5.
12. Remove 1 screw Ⓛ as shown in Fig. 6.

How to remove neon-illuminator L.E.D.

13. Remove 4 screws Ⓜ as shown in Fig. 5.
14. Remove 1 circlip Ⓝ and switch cam Ⓞ as shown in Fig. 5.
15. Remove strobo-illuminator case.

How to remove tone arm

16. Remove 4 screws Ⓟ of the arm base cover as shown in Fig. 5.
17. Remove 2 screws Ⓠ of the phono cord clamper as shown in Fig. 5.
18. Remove phono cord clamper as shown in Fig. 7.
19. Remove 2 screws Ⓡ of the phono cord p.c.b. as shown in Fig. 8.
20. Remove 2 screws Ⓢ as shown in Fig. 8.
21. Remove 2 screws Ⓣ of the silicon oil dumper as shown in Fig. 8.
22. Remove 3 screws Ⓤ as shown in Fig. 8.
23. Remove 2 screws Ⓧ of the tone arm as shown in Fig. 9.

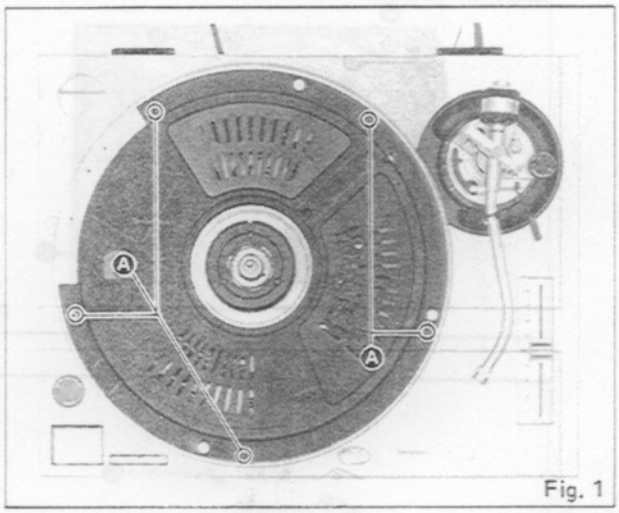

Fig. 1

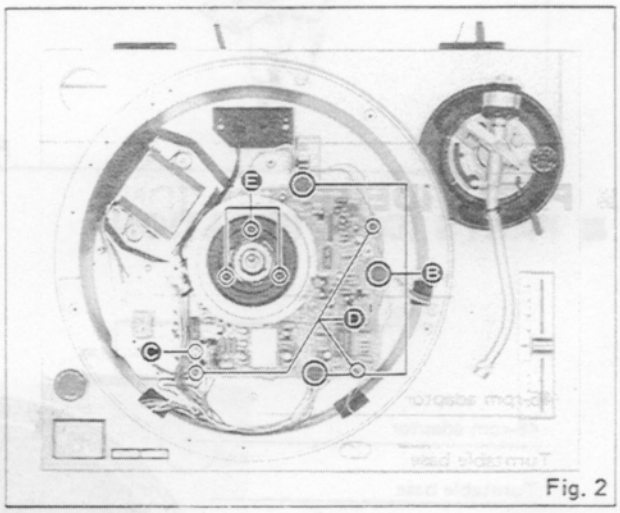

Fig. 2

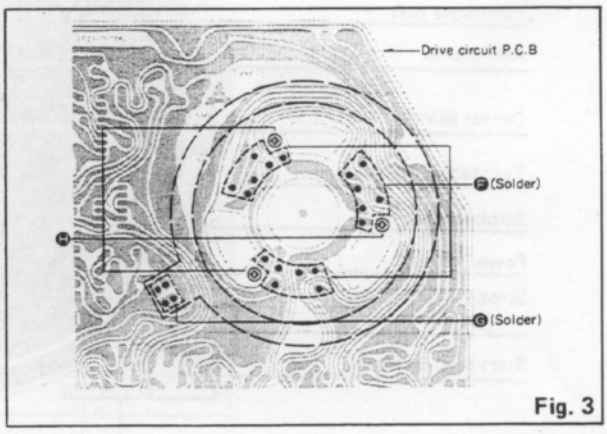

Fig. 3

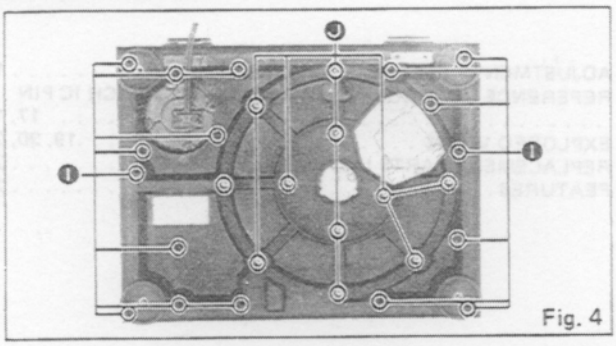

Fig. 4

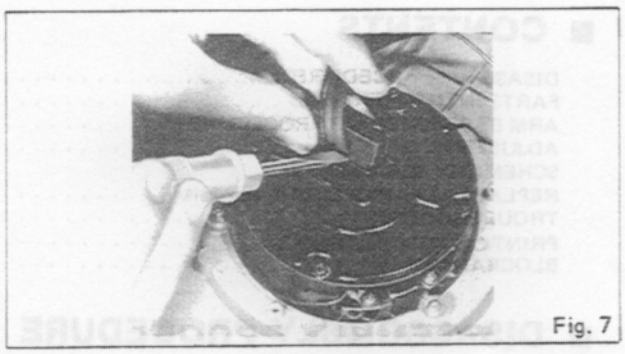
Fig. 7

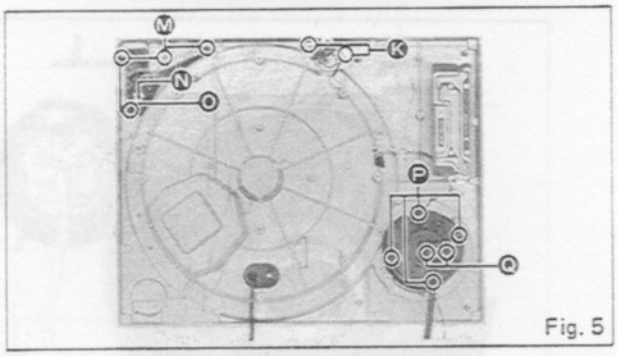

Fig. 5

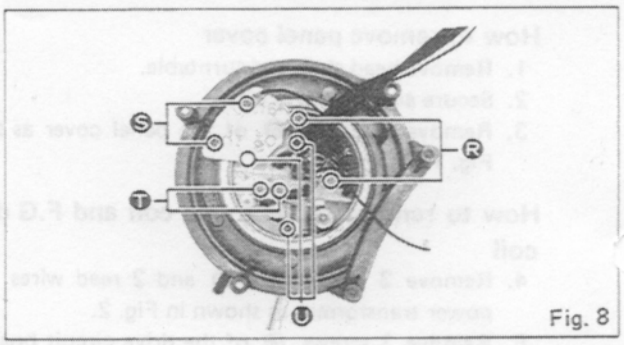

Fig. 8

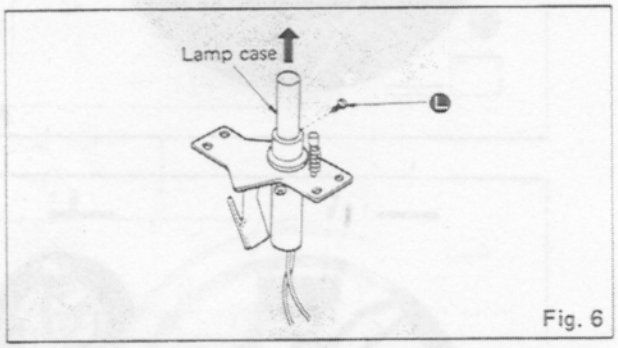

Fig. 6

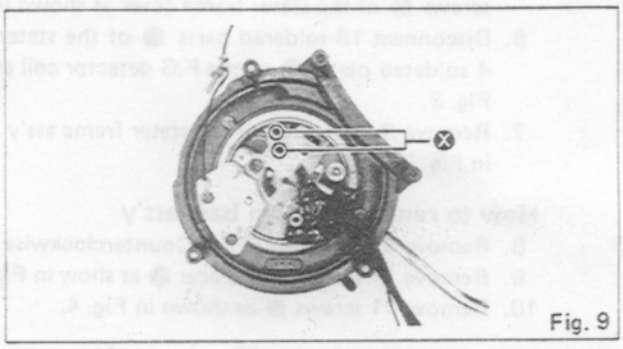

Fig. 9

■ PARTS IDENTIFICATION

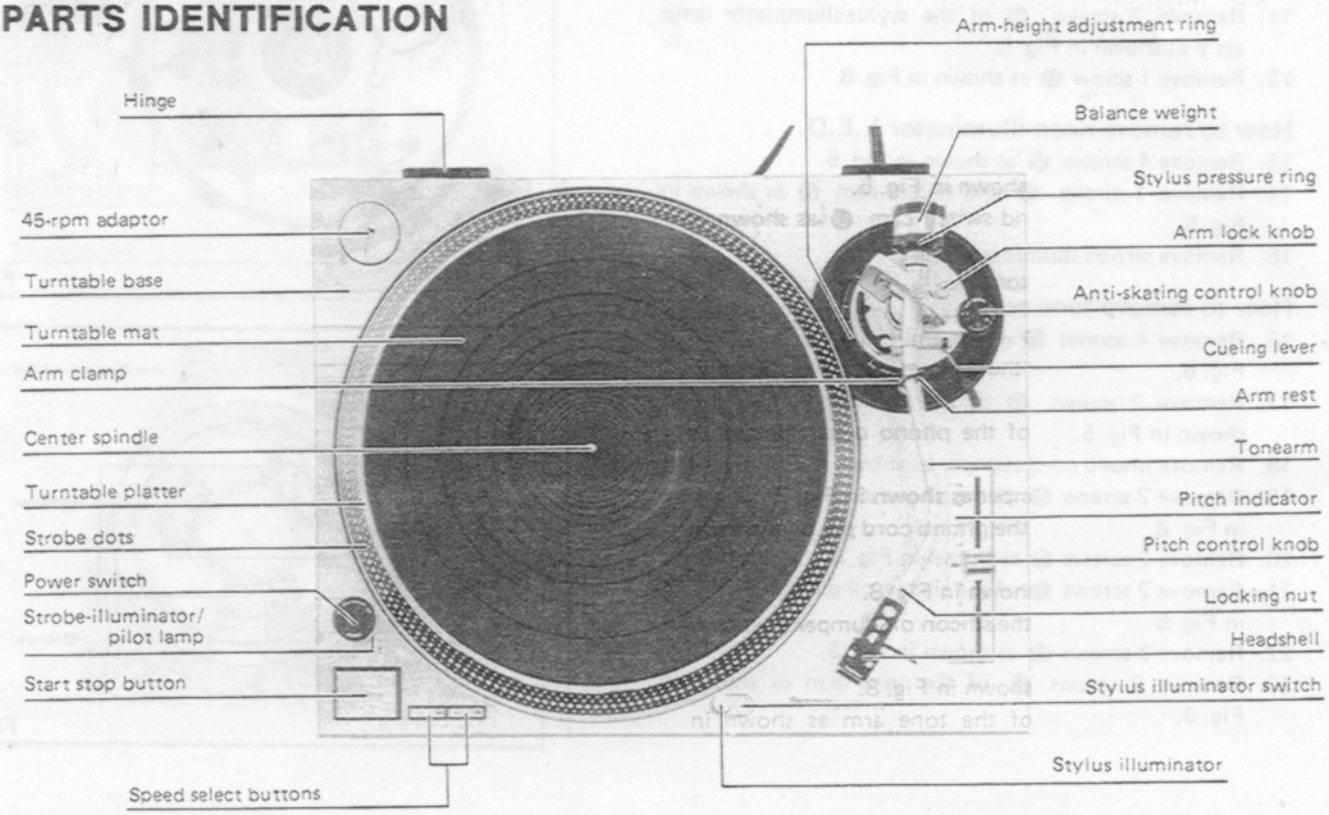

Fig. 10

■ ARM BASE ASSEMBLING PROCEDURE

1. Attach the control ring to the arm base seat. (The control ring should be roated counterclockwise.)
2. Completely tighten the control ring, and then loosen it 1.5~2.5 turns to set the scale to "3". (See Fig. 11)

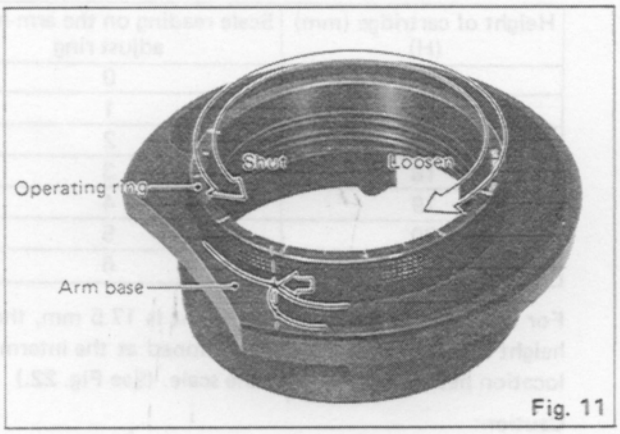

Fig. 11

3. Hold the arm base and set the red line mark on the arm base to the scale near "2", then turn the arm base clockwise. (See Fig. 12)
   Note:
   Take care not to allow deflection of the predetermined positions of the control ring and arm base seat.

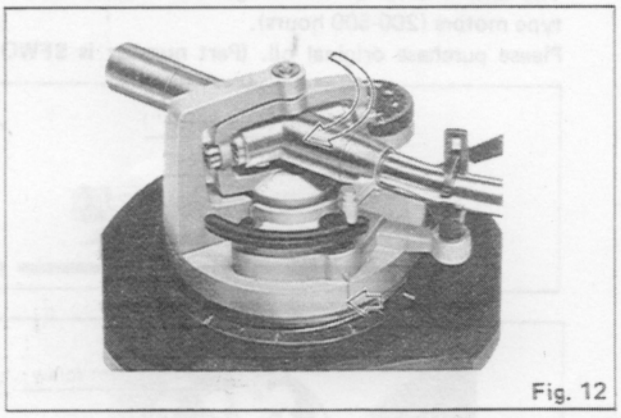
Fig. 12

4. Adjust the arm base so that the red line mark on the arm base is set to the scale "3" of the control ring. Next, secure the positioning base plate with two setscrews. (See Fig. 13)

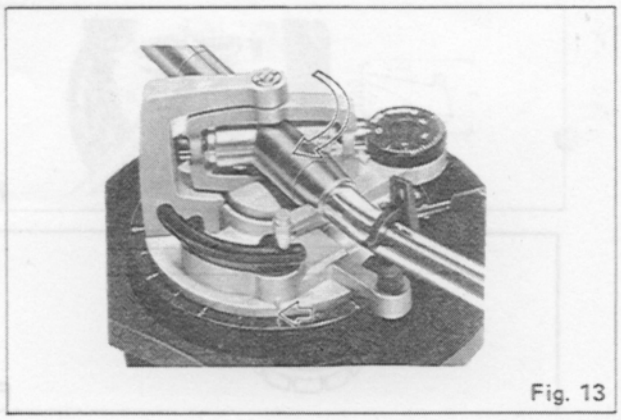
Fig. 13

5. Rotate the control ring and make sure that the arm base shifts within the range of 0~6mm. (See Figs. 14 and 15)
   If it does not shift within the specified range, the arm base position is deflected. In that case, disassemble the parts and check as specified in step 3.

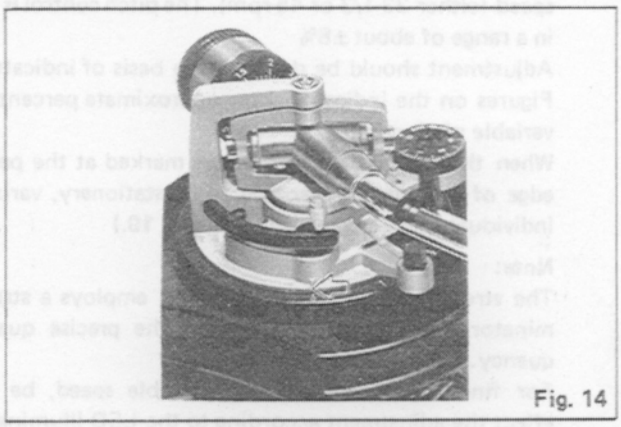
Fig. 14

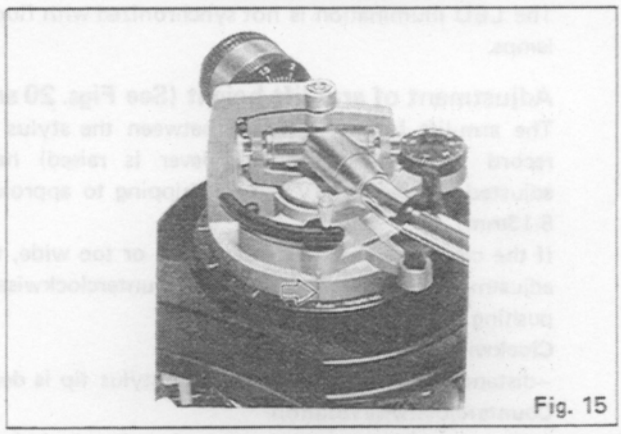
Fig. 15

■ ADJUSTMENT OF CANCELLER SPRING POSITION

If the arm body or PU base plate is replaced, be sure to set the canceller knob to "0.5" and make sure that the canceller spring is in contact with the arm shaft. (See Fig. 16)
If the canceller spring is deflected, adjust it as follows:

1. Clamp the arm on the rest.
2. Set the canceller knob to "0.5".
3. Remove the PU base plate, adjust gear Ⓐ so that the canceller spring is in the position of Fig. 16.
4. Mount the PU base plate onto the arm base and check the spring position.

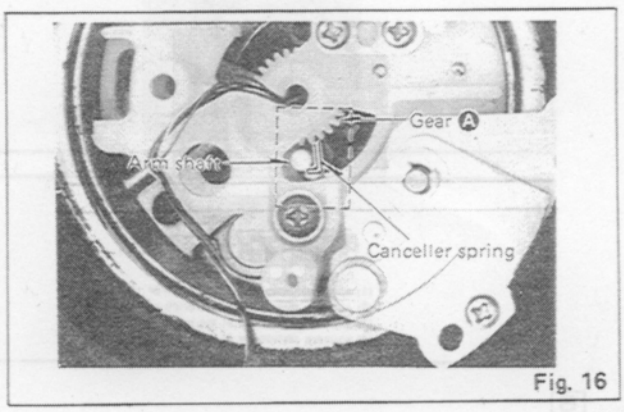

Fig. 16

■ ADJUSTMENTS

Pitch control (fine adjustment of speed) (See Figs. 18 and 19.)

When the pitch control knob is located at the center of the position after turning on the power, the green LED indicator is lit showing the operating condition for the predetermined speed (either 33-1/3 or 45 rpm). The pitch control is variable in a range of about ±8%

Adjustment should be done on the basis of indicator scale. Figures on the indicator show approximate percentages for variable pitch control.

When the strobe dots in 4 stages marked at the peripheral edge of the turntable appear to be stationary, variation of individual pitches is shown. **(See Fig. 19.)**

Note:

The strobe-illumination of this unit employs a strobe-illuminator LED synchronized with the precise quartz frequency.

For fine adjustment of the turntable speed, be sure to effect the adjustment according to the LED illumination.

The LED illumination is not synchronized with fluorescent lamps.

Adjustment of arm-lift height (See Figs. 20 and 21.)

The arm-lift height (distance between the stylus tip and record surface when cueing lever is raised) has been adjusted at the factory before shipping to approximately 8-13mm.

If the clearance becomes too narrow or too wide, turn the adjustment screw clockwise or counterclockwise, while pushing the arm lift down.

Clockwise rotation

–distance between the record and stylus tip is decreased.

Counterclockwise rotation

–distance between the record and stylus tip is increased.

Note:

As the adjusting screw has hexagonal head, be sure to make the adjustment while depressing the arm lift, or the screw will not move freely.

Also be sure that the hexagonal head retracts correctly into the arm lift when the latter is released.

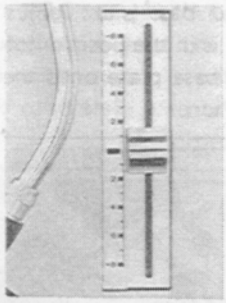

Fig. 18

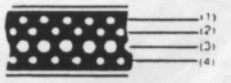

(1) appears stationary at the pitch of -6%
(2) appears stationary at the pitch of -3.3%
(3) appears stationary at the pitch of 0%
(4) appears stationary at the pitch of 3.3%

Fig. 19

Adjustment of the tonearm height (See Fig. 22.)

The height of the tonearm can be adjusted up to 6 mm, and a scale is provided on the adjust ring in 0.5 mm increments. Be sure to set the proper arm height using the adjust ring scale and referring to the table.

Height of cartridge (mm) (H)	Scale reading on the arm-height adjust ring
15	0
16	1
17	2
18	3
19	4
20	5
21	6

For example, if the cartridge height is 17.5 mm, the arm-height adjust ring should be positioned at the intermediate location between 2 and 3 on the scale. **(See Fig. 22.)**

Caution:

Be sure to lock the tonearm by turning the arm lock knob in the direction indicated by the arrow after finishing the height adjustment for the tonearm.

Lubrication (See Fig. 23.)

Apply 2 or 3 drops of oil once after every 2000 hours of operation.

The time interval is much longer than that for conventional type motors (200-500 hours).

Please purchase original oil. **(Part number is SFWO 010.)**

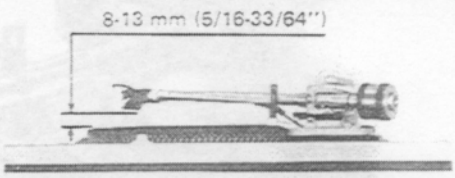

Fig. 20

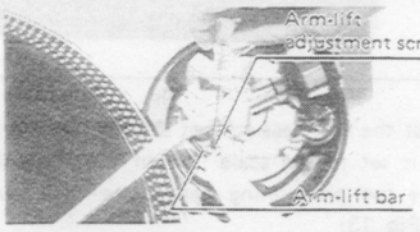

Fig. 21

Fig. 22

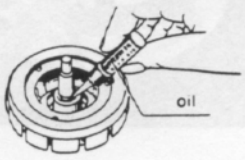

Fig. 23

■ JUSTIERUNGEN

Drehzahl-Feineinstellung (Vgl. Abb. 18 und 19.)

Wenn der Drehzahl-Feineinsteller beim Einschalten der Stromzufugr in seiner mittleren Stellung ist, leuchtet der grüne LED-Anzeiger auf und zeigt den Betriebszustand für die vorgewählte Drehzahl (entweder 33-1/3 oder 45 U/min) an. Die Drehzahl ist über einen Bereich von ca. ±8% regelbar.

Die Zehlen auf dem Anzeiger geben ungefähre Prozentzahlen für die Drehzahlrequlierung an.
Wenn eine der vier Atroboskoppunktereihen am Plattentellerrand stationär zu bleiben scheint, so wird dadurch die entsprechende Drehzahlabweichung (bzw. Nenndrehzahl) angezeigt. **(Vgl. Abb. 19.)**

Anmerkung:
Die Stroboskopbeleuchtung dieses Plattenspielers verwendet eine Stroboskop-LED-Lampe, die mit der präzisen Quarzfrequenz synchronisiert ist.
Die Drehzahl-Feineinstellung muß unter der Beleuchtung durch diese LED-Lampe durchgeführt werden. Die LED-Lampe ist nicht mit Leuchtstofflampen synchronisiert.

Justierung der Tonarmlifthöhe (Vgl. Abb. 20 und 21.)

Die Tonarmlifthöhe, d.h. der Abstand zwischen Nadelspitze und Schallplattenoberfläche, wenn der Lift- Hebel angehoben ist, ist werkseitig auf ungefähr 8–13 mm eingestellt worden.
Falls der Abstand zu groß oder zu klein wird, drehen Sie die Justierschraube im Uhrzeigersinn oder Gegenuhrzeigersinn während Sie die Tonarmliftführung nach unten drücken.

Drehung im Uhrzeigersinn
–Der Abstand wird kleiner.

Drehung im Gegenuhrzeigersinn
–Der Abstand wird größer.

Anmerkung:
Da die Justierschraube einen Sechskantkopf hat, muß die Tonarmliftführung während des Justierens unbedingt gedrückt gehalten werden, damit sich die Schraube leicht drehen läßt.
Vergewissern Sie sich, daß der Sechskantkopf in die Tonarmliftführung zurückkehrt, wenn diese losgelassen wird.

Justierung des Antiskating-Einstellers

Stellen Sie den Antiskating-Einstellknopf auf den gleichen Wert ein, wie den Auflagedruck. **(Vgl. Abb. 13.)**

Justierung der Tonarmhöhe (Vgl. Abb. 22.)

Die Tonarmhöhe kann mittels eines Justierrings, dessen Skala in Stufen von 0,5 mm unterteilt ist, um bis zu 6mm reguliert werden. Nehmen Sie die Justierung gemäß nachstehender Tabelle vor.

Tonabnehmerhöhe (mm) (H)	Skalaeinstellung auf dem Tonarmhöhe-Justierring
15	0
16	1
17	2
18	3
19	4
20	5
21	6

Falls die Tonarmhöhe beispielsweise 17,5 mm beträgt, sollte der Justierring zwischen die Skalaeinstellungen 2 und 3 eingestellt werden. **(Vgl. Abb. 22.)**

Achtung:
Nach erfolgter Tonarmhöhe-Justierung muß der Tonarm unbedingt durch Drehen des Tonarmverriegelunskopfs in der Pfeilrichtung festgestellt werden.

■ JUSTIERUNGEN (Elektrisch)

Anmerkung:
- Nach Teierneuerung von z.B. IC, Transistor, Diode usw.die folgenden Abgleichungen vornehmen.
- Einstellung des Gerätes
  1. Netzschalter - - - - - - ON
  2. Tonhöhe Kontrolle - - - - - - Mittlere Stellung.
  3. Drehzahlwähler - - - - - - - 33 U/min.
- Zu verwendende Instrumente
  1. Prüfgerät
  2. Signalfrequenzmesser

	Abgleichung	Anschlußpunkte	Abgleichspunkte	Abgleichmethode
A	Abgleich der Tonhöh Kontrolle ±0% (PITCH)	Signalfrequnzmesser ⊕ — TP27 ⊖ — GROUND	VR301	1. Schalter für Tonhöhekontrolle auf Mittelstellung. 2. VR301 auf 262.08 kHz ±0.05 kHz abgleichen.
B	Abgleich des Tonhöhesteuergewinns	Prüfgerät TP31 und TP32	VR302	VR302 auf 2.7K ±0.1 des Widerstandswertes einstellen.
C	Bremsen Justierung (BRAKE)	—	VR201	VR201 innerhalb 120°~270° nach Haltsignalanzeige auf Kompletten Halt Justieren. (Plattenteller wird ein paar Sekunden nach Halt frei.) Haltsignal 270° Platte-nteller 120°

■ REGLAGES

Réglage d'écart (mise au point exacte de la vitesse) (Voir Figs. 18 et 19.)

Lorsque la manette de réglage d'écart est située à la position centrale une fois l'alimentation mise en marche, l'indicateur à diode électro-luminescente (LED) verte s'éclaire pour indiquer la condition de fonctionnement de la vitesse prédéterminée (soit 33-1/3 ou 45 t/p.m.). Le réglage d'écart est ajustable dans une plage d'á peu prés 8%.

La mise au point devra être faite en se basant sur la graduation de l'indicateur. Les chiffres sur l'indicateur montrent les pourcentages approximatifs pour un réglage d'écart variable.

Lorsque les points stroboscopiques sur les quatre gradins du bord périphérique du plateau semblent être immobiles, la variation des écarts individuels est représentée. **(Voir Fig. 19.)**

Nota:

L'éclairage stroboscopique de cet appareil utilise un illuminomètre stroboscopique à diodes électro-illuminescentes (LED) synchronisé avec une fréquence à quartz précise.

Pour une mise au point exacte de la vitesse du plateau, s'assurer d'effectuer le réglage selon l'éclairage de la diode électro-liminescente.

L'éclairage à diodes électro-luminescentes ne se synchronise pas avec l'utilisation de lampes fluorescentes.

Mise au point de la hauteur de l'elévateur du bras (Voir Figs. 20 et 21.)

La hauteur de l'élévateur du bras (distance entre l'extrémite de la pointe de lecture et la surface du disque lorsque le levier de pose et de relevage du bras est soulevé) a été réglée en usine avant son départ sur une valeur approximative de 8 – 13 mm.

Si l'écartement devient rrop étroit ou trop large, tourner la vis de réglage dans le sens des aiguilles d'une montre ou en sens inverse, tout en abaissant l'étévateur du bras.

Rotation dans le sens des aiguilles d'une montre.

–La distance entre la surface du disque et l'extrémité de la pointe de lecture diminue.

Rotation dans le sens contraire des aiguilles d'une montre.

–La distance entre la surface du disque et l'extrémité de la pointe de lecture augmente.

Nota:

Comme le vis de réglage possède une tête hexagonale, s'assurer d'effectuer la mise au point tout en abaissant l'élévateur du bras, sinon la vis ne bougera pas librement. Vérifier aussi que la tête hexagonale se retire correctement dans l'élévateur du bras quand ce dernier est libére.

Mise au point de la hauteur du bras de lecture (Voir Fig. 22.)

La hauteur deu bras de lecture peut être réglée jusqu'à 6 mm et une graduation est disposée sur la bague de réglage par augmentation de 0,5 mm. S'assurer de régler convenablement la hauteur du bras en utilisant la graduation de la bague et en se réferant au tableau ci-dessous.

Hauteur de la cellulle de lecture (mm) (H)	Lecture de la graduation sur la bague de réglage de la hauteur du bras
15	0
16	1
17	2
18	3
19	4
20	5
21	6

Par exemple, si la hauteur de la cellule de lecture est de 17,5 mm, la bague de réglage de la hauteur du bras devra être positionnée à l'emplacement intermédiaire entre les lectures de la graduation 2 et 3 indiquées sur la graduation. **(Voir Fig. 22.)**

Avertissement:

S'assurer de bloquer le bras de lecture en tournant la manette de blocage du bras dans la direction indiquée par la flèche, après avoir terminé la mise au point de la hauteur du bras de lecture.

■ REGLAGES (Electricité)

Notes:
- Effectuer les réglages suivants aprés avoir remplacé des éléments tels que les IC, transistors, diodes, et autres.
- Etat de l'appareil
  1. Commutateur d'alimentation - - - - - Marche
  2. Commande d'alignement de la vitesse - - - - - Position centrale
  3. Commutaur du sélecteur de vitesse - - - - - 33-1/3 trs/mn.
- Appareils á utiliser
  1. Contrôleur
  2. Fréquencemétre

	Réglage	Points de connexion	Points de réglage	Méthode de réglage
A	Réglage de la commande d'alignement de la vitesse, ±0% (PITCH)	Fréquencemétre ⊕ —— TP27 ⊖ —— TERRE	VR301	1. Commutateur de commande d'alignement de la vitesse en position centrale 2. Régler la VR301 sur une fréquence de 262,08 kHz ±0.05 kHz
B	Réglage du gain de comande dela vitesse de rotation du plateau	Contrôleur TP31 et TP32	VR302	Regler la VR302 sur la raleur de la résistance de 2.7K ±0.1
C	Réglage du frein (BRAKE)		VR201	Régler la VR201 sur l'envoi du signal d'arrêt. (Le plateau devient libre quelques secondes aprés l'arrêt.) Signal d'arret, Plateau, 270°, 120°

chematic Diagram (This schematic diagram may be modified at any time with the development of

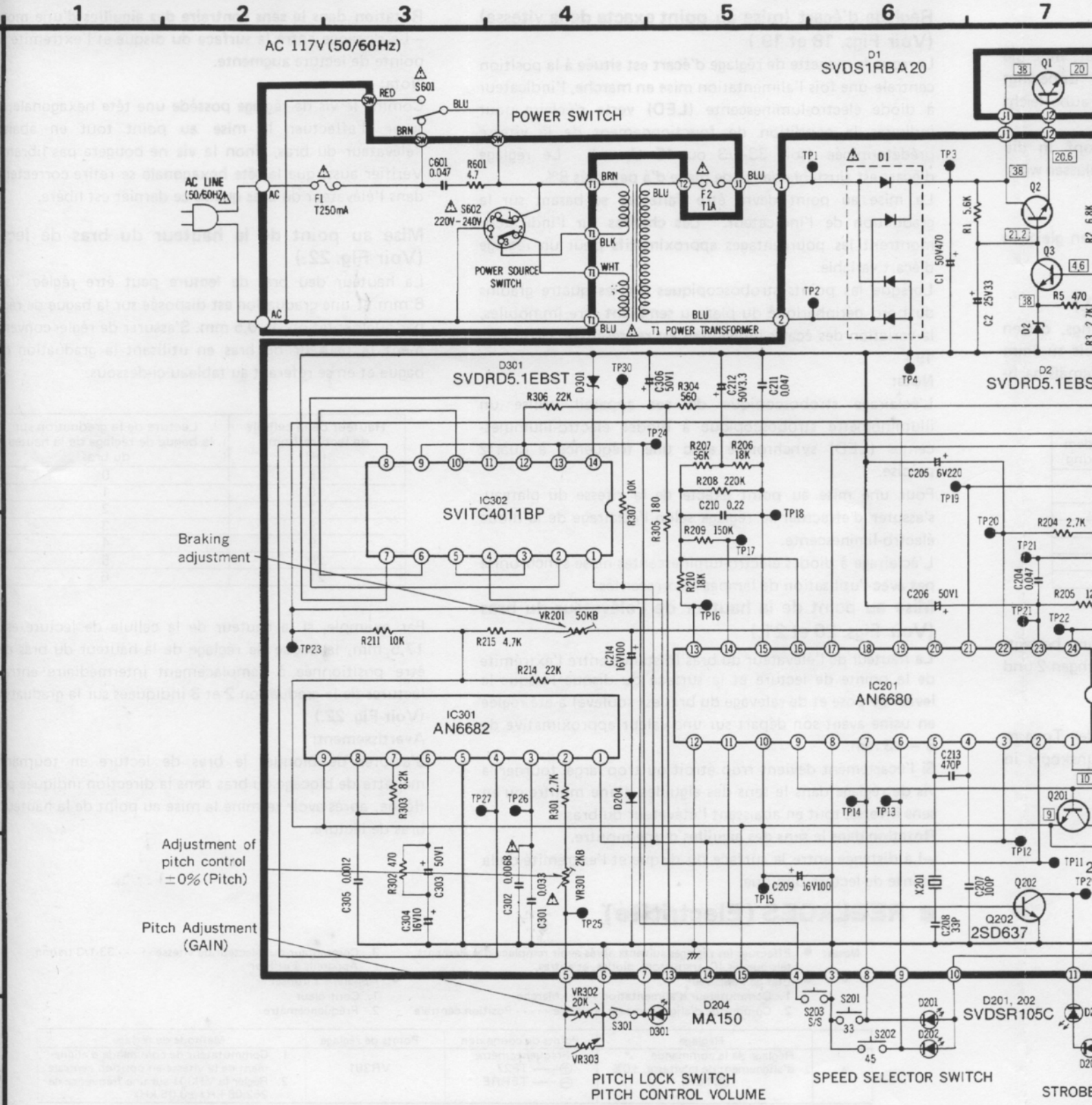

■ TERMINAL GUIDE OF TRANSISTOR AND IC

AN6675	AN6680	AN6682	SVITC4011BP	2SC1846	2SC1328	2SD637	2SD389
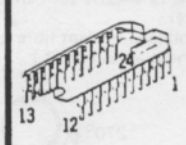	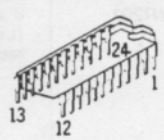	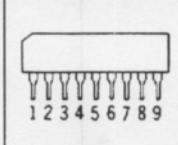	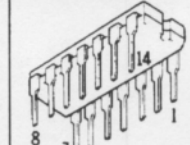	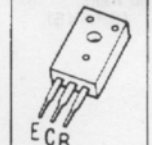	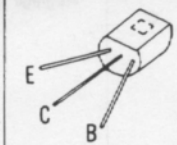		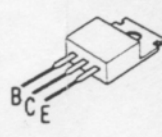

nent of new technology.)

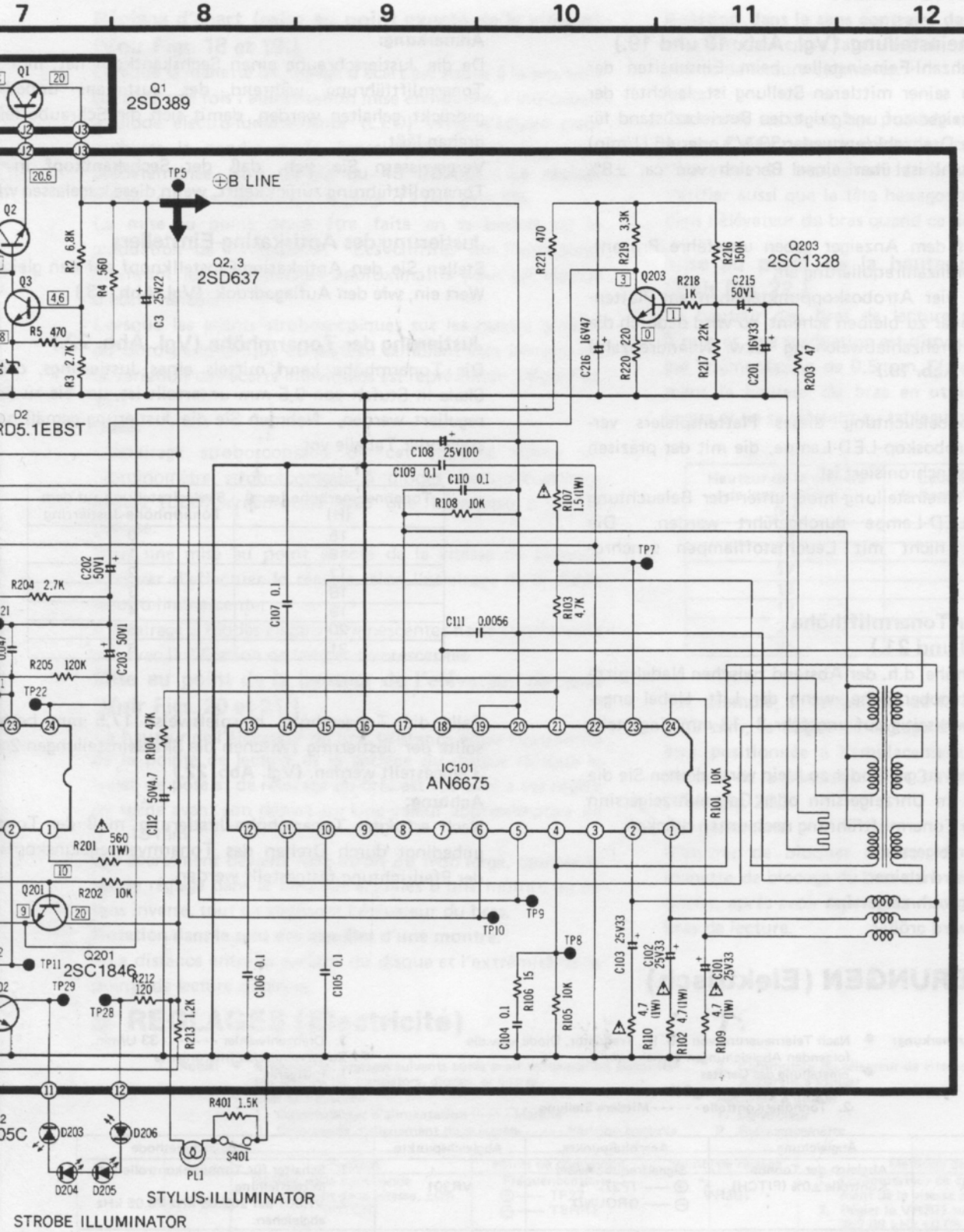

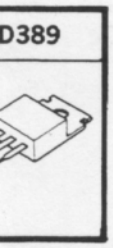

NOTE:

1. **S201:** Speed selector switch (33-1/3 r.p.m.) in "**ON**" position. (push condition)
2. **S202:** Speed selector switch (45 r.p.m.) in "**OFF**" position. (not-push condition)
3. **S203:** Start/Stop switch in "**OFF**" position. (not-push condition)
4. **S301:** Pitch lock switch in "**ON**" position. (center position)
5. **S401:** Stylus-illuminator switch in "**OFF**" position.
6. **S601:** Power switch in "**ON**" position.
7. **S602:** Power source switch in "**220–240V**" position.
8. The drive circuit IC voltage and wave form are not indicated in side the schematic diagram.
9. Indicated voltage valuse are the standard values for the unit measured by DC electronic circuit tester (high impedance) with the chassis taken as standard. Therefore, there may exist some errors in the voltage values, depending on the internal impedance of the DC circuit tester.
10. ⚠ indicates that only parts specified by the manufactuer be used for safety.

■ REPLACEMENT PARTS LIST (Electrical)

Notes: 1. Part numbers are indicated on most mechanical parts.
Please use this number for parts orders.
2. ⚠ indicates that only parts specified by manufacturer be used for safety.
3. SL-1200MK2 (XG) → [XG], SL-1200MK2 (XA) → [XA], SL-1200MK2 (XGB) → [XGB]
SL-1200MK2 (XAL) → [XAL], SL-1200MK2 (E) → [E]

Ref. No.		Part No.	Part Name & Description
INTEGRATED CIRCUITS			
IC101		AN6675	Integrated Circuit
IC201		AN6680	Integrated Circuit
IC301		AN6682	Integrated Circuit
IC302		SVITC4011BP	Integrated Circuit
TRANSISTORS			
Q1		2SD389A-Q	Transistor
Q2, 3, 202		2SD637	Transistor
Q201		2SC1846-R	Transistor
Q203		2SC1328-T	Transistor
DIODES			
D1	⚠	**SVDS1RBA40**	Rectifier
D2, 301		**MA1051**	Diode, Zener 5.1V
D204		**MA162A**	Diode
D201, 202		SVDSR-105C	Light Emitting Diode
D203~206		SVDEBR5505S	Light Emitting Diode
D301		SVDGL-9PG2	Light Emitting Diode
CRYSTAL			
X201		SVQU306115	Crystal, 4.19328MHz Oscillator
VARIABLE RESISTORS			
VR201		EVLS6AA00B54	Braking Adjustment (BRAKE), 50kΩ (B)
VR301		EVMH2GA00B53	Adjustment of Pitch Control ±0%(PITCH), 5kΩ (B)
VR302		EVLS6AA00B54	Pitch Adjustment (Gain) 50kΩ
VR303		EVBJ05C19ABE	Pitch Control Volume
SWITCHES			
S201		EVQP5R04K	Switch, Speed Selector (33-1/3 r.p.m.)
S202		EVQP5R04K	Switch, Speed Selector (45 r.p.m.)
S203		SFDSSS5GL13C	Switch, Start/Stop
S401		SFDSD2MSL-4	Switch, Stylus-illuminator
S601	⚠	SFDSSS5GL13S	Switch, Power
S602	⚠	SFDSHXW01317	Switch, Power Source
LAMP			
PL1		SFDN172-01	Lamp, Stylus-illuminator
TRANSFORMER			
T1	⚠	SLTF5900	Power Transformer
FUSE			
F1	⚠	XBA2C025TIA	Fuse, T250 mA
F2	⚠	XBA2C10TRO	Fuse, T1A
RESISTORS			
R1		**ERD25FJ562**	Carbon, 5.6kΩ, 1/4W, ± 5%
R2		**ERD25FJ682**	Carbon, 6.8kΩ, 1/4W, ± 5%
R3		**ERD25FJ272**	Carbon, 2.7kΩ, 1/4W, ± 5%
R4		**ERD25FJ561**	Carbon, 560Ω, 1/4W, ± 5%
R5		**ERD25FJ471**	Carbon, 470Ω, 1/4W, ± 5%
R101		**ERD25FJ103**	Carbon, 10kΩ, 1/4W, ± 5%
R102	⚠	ERX1ANJ4R7	Metal Film, 4.7Ω, 1W, ± 5%
R103		**ERD25FJ472**	Carbon, 4.7kΩ, 1/4W, ± 5%
R104		**ERD25TJ473**	Carbon, 47kΩ, 1/4W, ± 5%
R105		**ERD25FJ103**	Carbon, 10kΩ, 1/4W, ± 5%
R106		**ERD25FJ150**	Carbon, 15Ω, 1/4W, ± 5%
R107	⚠	ERX1ANJ1R5	Metal Film, 1.5Ω, 1W, ± 5%
R108		**ERD25FJ103**	Carbon, 10kΩ, 1/4W, ± 5%
R109, 110	⚠	ERX1ANJ4R7	Metal Film, 4.7Ω, 1W, ± 5%
R201	⚠	ERG1ANJ561	Metal Oxide, 560Ω, 1W, ± 5%
R202		**ERD25FJ103**	Carbon, 10kΩ, 1/4W, ± 5%
R203		**ERD25FJ470**	Carbon, 47Ω, 1/4W, ± 5%
R204		**ERD25FJ272**	Carbon, 2.7kΩ, 1/4W, ± 5%
R205		**ERD25TJ124**	Carbon, 120kΩ, 1/4W, ± 5%
R206		**ERD25TJ183**	Carbon, 18kΩ, 1/4W, ± 5%
R207		**ERD25TJ563**	Carbon, 56kΩ, 1/4W, ± 5%
R208		**ERD25TJ224**	Carbon, 220kΩ, 1/4W, ± 5%
R209		**ERD25TJ154**	Carbon, 150kΩ, 1/4W, ± 5%
R210		**ERD25TJ183**	Carbon, 18kΩ, 1/4W, ± 5%
R211		**ERD25FJ103**	Carbon, 10kΩ, 1/4W, ± 5%
R212		**ERD25FJ121**	Carbon, 120Ω, 1/4W, ± 5%
R213		**ERD25FJ122**	Carbon, 1.2kΩ, 1/4W, ± 5%
R214		**ERD25TJ223**	Carbon, 22kΩ, 1/4W, ± 5%
R215		**ERD25FJ472**	Carbon, 4.7kΩ, 1/4W, ± 5%
R216		**ERD25TJ154**	Carbon, 150kΩ, 1/4W, ± 5%
R217		**ERD25TJ223**	Carbon, 22kΩ, 1/4W, ± 5%
R218		**ERD25FJ102**	Carbon, 1kΩ, 1/4W, ± 5%
R219		**ERD25FJ332**	Carbon, 3.3kΩ, 1/4W, ± 5%
R220		**ERD25FJ221**	Carbon, 220Ω, 1/4W, ± 5%
R221		**ERD25FJ471**	Carbon, 470Ω, 1/4W, ± 5%
R301		ERO25CKF3301	Metal Film, 3.3kΩ, 1/4W, ± 1%
R302		**ERD25FJ471**	Carbon, 470Ω, 1/4W, ± 5%
R303		**ERD25FJ822**	Carbon, 8.2kΩ, 1/4W, ± 5%
R304		**ERD25FJ152**	Carbon, 1.5kΩ, 1/4W, ± 5%
R306		**ERD25TJ223**	Carbon, 22kΩ, 1/4W, ± 5%
R601		**ERD25FJ4R7**	Carbon, 4.7Ω, 1/4W, ± 5%
CAPACITORS			
C1		**ECEB1HS471**	Electrolytic, 470μF, 50V
C2		**ECEA1VS330**	Electrolytic, 33μF, 35V
C3		**ECEA1ES220**	Electrolytic, 22μF, 25V
C101, 102		**ECEA1VS330**	Electrolytic, 33μF, 35V
C103		**ECEA1VS330**	Electrolytic, 33μF, 35V
C104, 105		ECQM1H104KZ	Polyester, 0.1μF, 50V, ±10%
C106, 107		ECQM1H104KZ	Polyester, 0.1μF, 50V, ±10%
C108		**ECEA1ES101**	Electrolytic, 100μF, 25V
C109, 110		ECQM1H104KZ	Polyester, 0.1μF, 50V, ±10%
C111		ECQM1H562KZ	Polyester, 0.0056μF, 50V, ±10%
C112		**ECEA1JS4R7**	Electrolytic, 4.7μF, 63V
C201		**ECEA1CS330**	Electrolytic, 33μF, 16V
C202, 203		**ECEA50Z1**	Electrolytic, 1μF, 50V
C204		ECQM1H473KZ	Polyester, 0.047μF, 50V, ±10%
C205		**ECEA1AS221**	Electrolytic, 220μF, 10V
C206		**ECEA50Z1**	Electrolytic, 1μF, 50V
C207		ECCD1H101K	Ceramic, 100pF, 50V, ±10%
C208		ECCD1H390K	Ceramic, 39pF, 50V, ±10%
C209		**ECEA1ES101**	Electrolytic, 100μF, 16V
C210		ECQM1H224KZ	Polyester, 0.22μF, 50V, ±10%
C211		ECQM1H473KZ	Polyester, 0.047μF, 50V, ±10%
C212		**ECEA50Z3R3**	Electrolytic, 3.3μF, 50V
C213		ECCD1H471K	Ceramic, 470pF, 50V, ±10%
C214		**ECEA1ES101**	Electrolytic, 100μF, 25V
C215		**ECEA50Z1**	Electrolytic, 1μF, 50V
C216		**ECEA1ES470**	Electrolytic, 47μF, 25V
C301, 302	⚠	ECQK1123FZ	Polyester, 0.012μF, 125V, ± 1%
C303		**ECEA50Z1**	Electrolytic, 1μF, 50V
C304		**ECEA1HS100**	Electrolytic, 10μF, 50V
C305		ECQM1H122KZ	Polyester, 0.0012μF, 50V, ±10%
C306		**ECEA50Z1**	Electrolytic, 1μF, 50V
C601		ECNC4A473M	Paper, 0.047μF, 400V, ±20%

■ TROUBLE SHOOTING

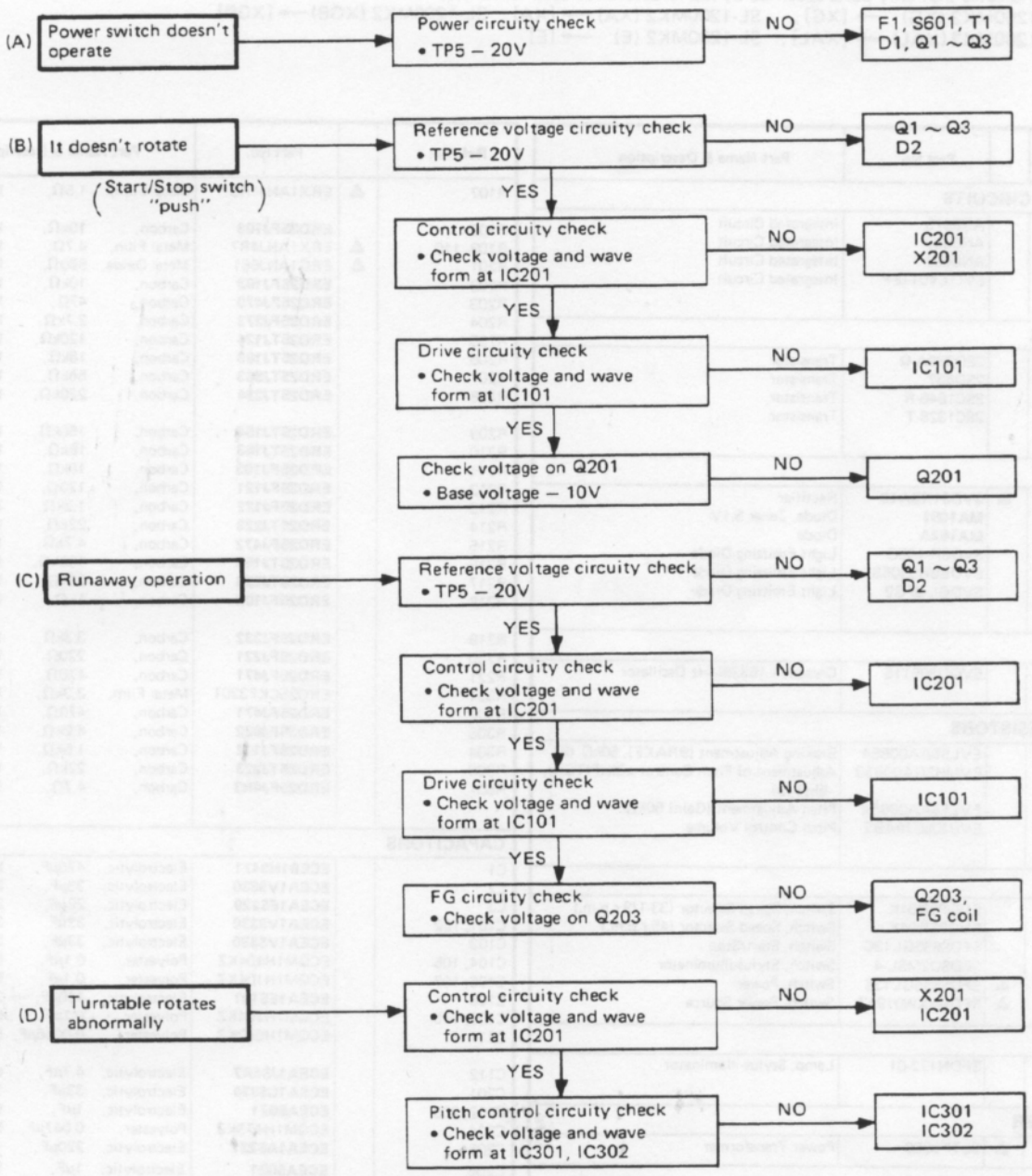

Printed Circuit Board

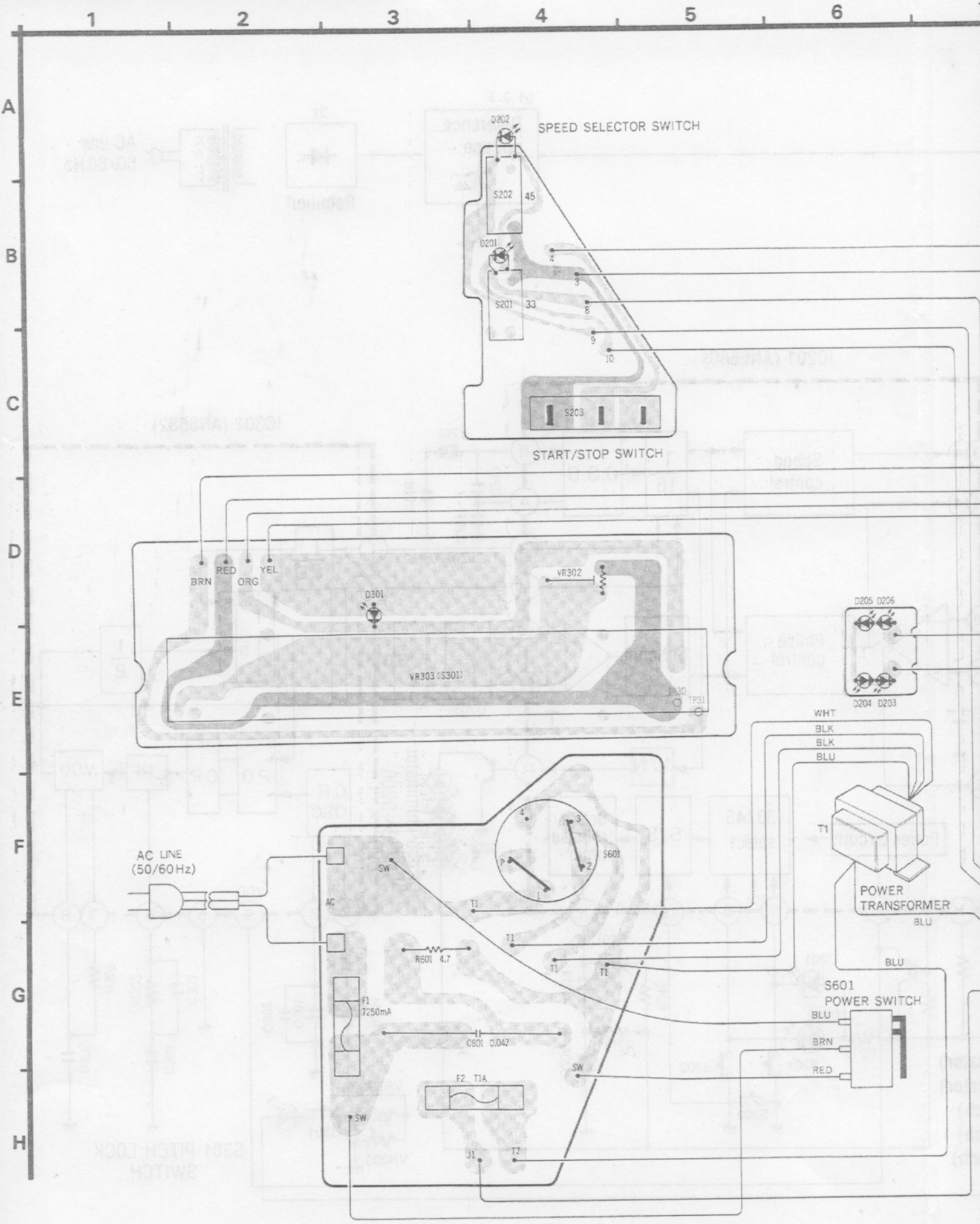

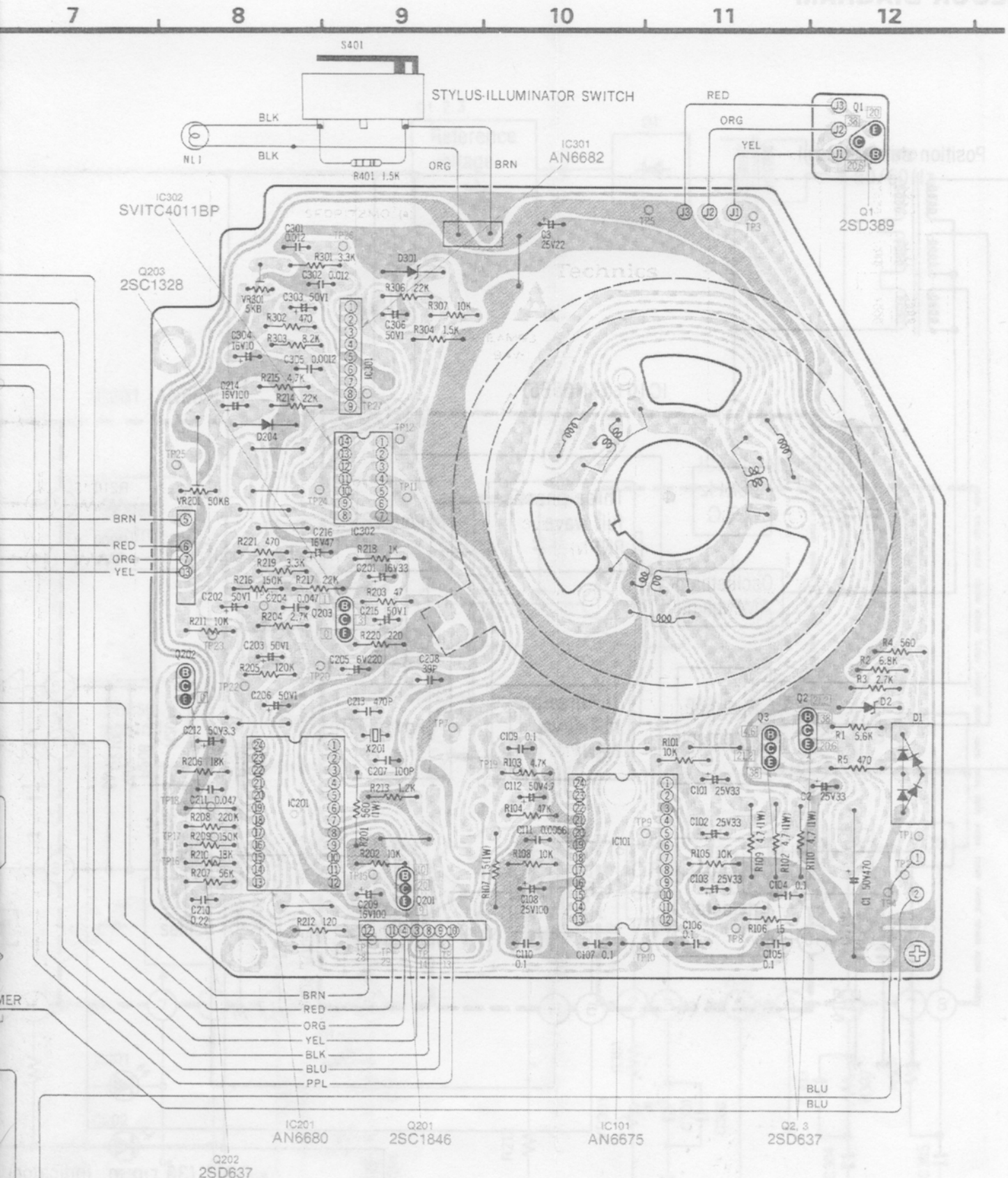
7
8
9
10
11
12
S401
STYLUS-ILLUMINATOR SWITCH
BLK
BLK
NL1
R401 1.5K
ORG
BRN
IC301
AN6682
RED
ORG
YEL
Q1
2SD389
IC302
SVITC4011BP
Q203
2SC1328
BRN
RED
ORG
YEL
BRN
RED
ORG
YEL
BLK
BLU
PPL
BLU
BLU
IC201
AN6680
Q201
2SC1846
IC101
AN6675
Q2, 3
2SD637
Q202
2SD637

■ BLOCK DIAGRAM

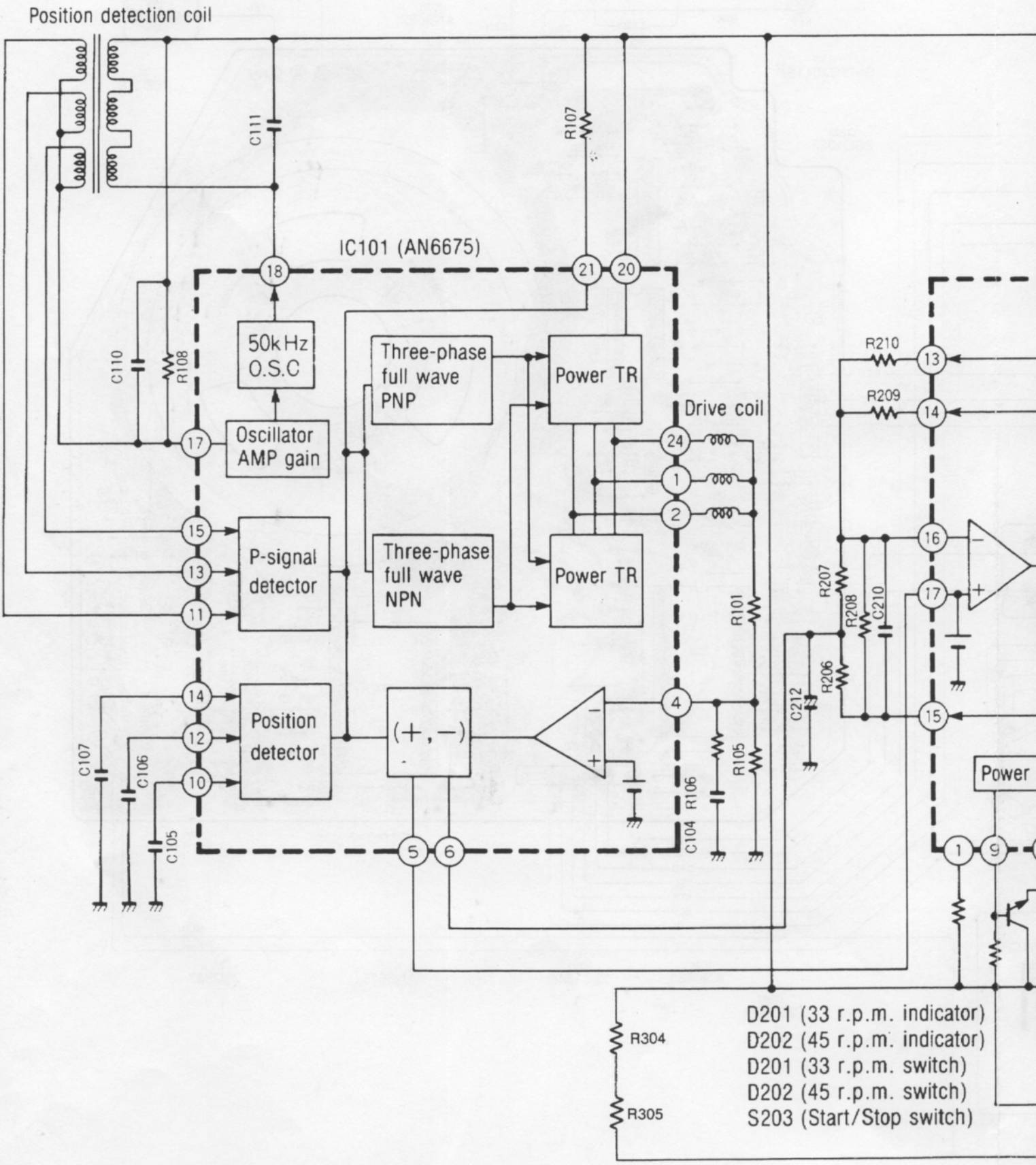

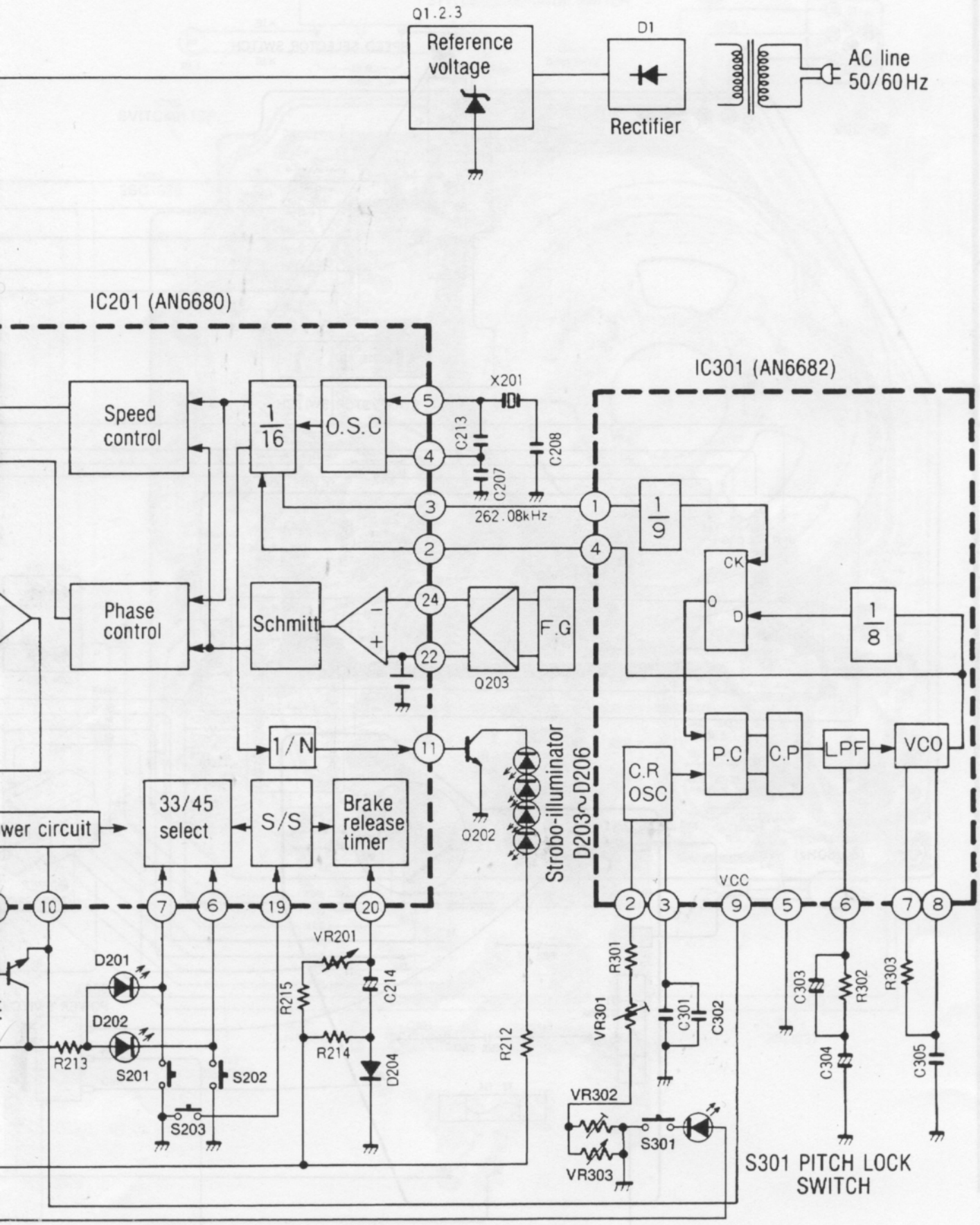
Q1.2.3
Reference voltage
D1
Rectifier
AC line 50/60Hz
IC201 (AN6680)
IC301 (AN6682)
Speed control
1/16
O.S.C
X201
C213
C207
C208
262.08kHz
1/9
CK
D
Q
1/8
Phase control
Schmitt
F.G
Q203
1/N
Q202
Strobo-illuminator D203~D206
C.R OSC
P.C
C.P
LPF
VCO
33/45 select
S/S
Brake release timer
VCC
D201
D202
R213
S201
S202
S203
VR201
R215
C214
R214
D204
R212
R301
VR301
C301
C302
C303
R302
C304
R303
C305
VR302
VR303
S301
S301 PITCH LOCK SWITCH

■ ADJUSTMENT (Electrical)

Notes:
- Make the following adjustments after replacing parts such as IC's, transistors, diodes, etc.
- Condition of the set.
  1. Power switch ..... ON
  2. Pitch control ..... Center position
  3. Speed selector switch ..... 33-1/3 r.p.m.
- Instruments to be used
  1. Tester
  2. Frequency counter

	Adjustment	Connection Points	Adjustment Point	Adjustment Method
A	Adjustment of pitch control ±0% (PITCH)	Frequency counter ⊕ — TP27 ⊖ — GROUND	VR301	1. Pitch control switch to center position. 2. Adjust VR301 for 262.08 kHz ±0.05 kHz of frequency.
B	Adjustment of pitch control gain	Tester TP31 and TP32	VR302	Adjust VR302 for 2.7 kΩ ±0.1 of resistance value
C	Braking adjustment (BRAKE)	–	VR201	Adjust VR201 for complete stop within 120° ~ 270° after stop signal initiated. (Turntable becomes free a few seconds after stop) 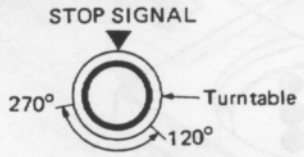

■ REFERENCE VOLTAGE AND WAVEFORM AT EACH IC PIN

IC101 (AN6675)

	Start	Stop
①	2V	2V
②	2V	2V
③	0V	0V
④	5V	5V
⑤	5V	5V
⑥	5V	6.6V
⑦	0V	0V
⑧	5V	5V
⑨	0V	0V
⑩	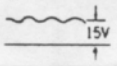	15V
⑪	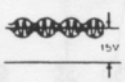	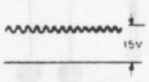

	Start	Stop
⑫	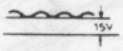	15V
⑬	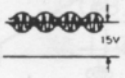	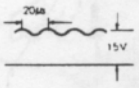
⑭	15V	15V
⑮	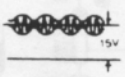	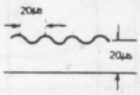
⑯	0V	0V
⑰	15V	15V

	Start	Stop
⑱	Same as at right	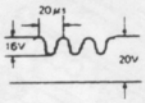
⑲	20V	20V
⑳	20V	20V
㉑	20V	20V
㉒	0.2V	0.2V
㉓	20V	20V
㉔	1.7V	1.7V

IC201 (AN6680)

	Start	Stop		Start	Stop		Start	Stop
①	2.5V	2.5V	⑧	0V	0V	⑯	5V	2.5V
②	Same as at right	4μs 5V	⑨	9.8V	9.8V	⑰	5V	5V
			⑩	10V	10V	⑱	0V	0V
③	Same as at right	4μs 5V	⑪	Same as at right	10ms 0.8V	⑲	7.5V	0V
						⑳	0V	5V
						㉑	1.5V	0V
			⑫	0V	0V	㉒	3V	3V
④	Same as at right	0.24μs 2.5V	⑬	5V	0.2V	㉓	1V 20ms 3V	3V
⑤	Same as at right	0.24μs 6V	⑭	20ms 3V	20ms 2.5V	㉔	2.8V	2.8V
⑥	3.4V	3.4V	⑮	5V 5.5V	8V			
⑦	0V	0V						

IC301 (AN6682)

	Start	Stop		Start	Stop		Start	Stop
①	Same as at right	4μs 5V	④	Same as at right	4μs 4.2V	⑧	Same as at right	0.4V 1.8V
②	Same as at right	1V 1.5V	⑤	0V	0V	⑨	9V	9V
			⑥	3.9V	3.9V			
③	Same as at right	2.6ms 2.8V	⑦	Same as at right	8μs 7V			

IC302 (SVITC4011BP)

	Start	Stop		Start	Stop		Start	Stop
①	Same as at right	4μs 5V	⑤	Same as at right	4μs 5V	⑨	5V	5V
						⑩	5V	5V
						⑪	5V	5V
②	5V	5V	⑥	5V	5V	⑫	0.6V	0.6V
③	Same as at right	4μs 5V	⑦	0V	0V	⑬	0.6V	0.6V
			⑧	Same as at right	4μs 5V	⑭	5V	5V
④	5V	5V						

Q202 (2SD637)

	Start	Stop
E	0V	0V
C	Same as at right	10ms 10V
B	Same as at right	10ms 1V

■ EXPLODED VIEWS

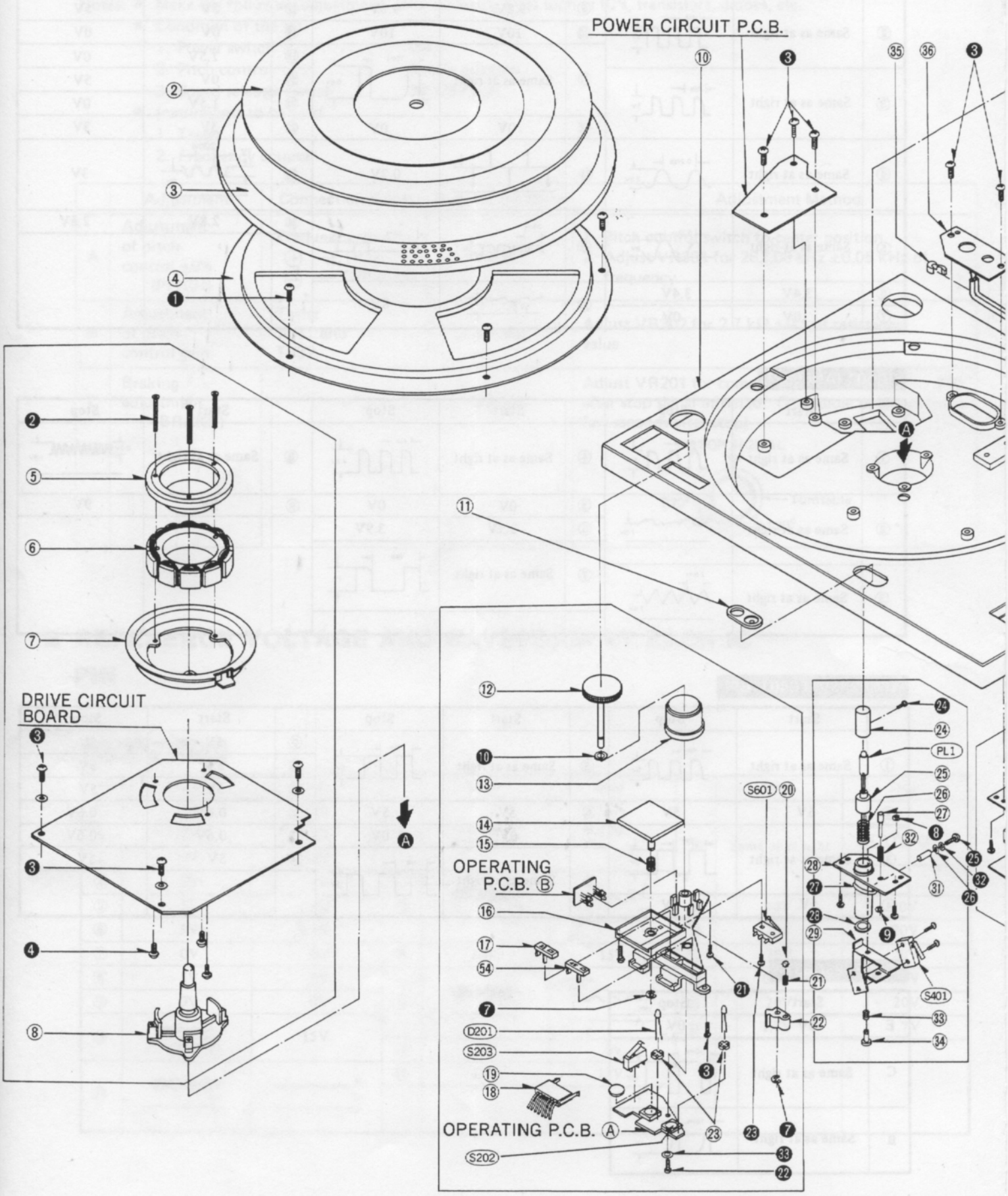

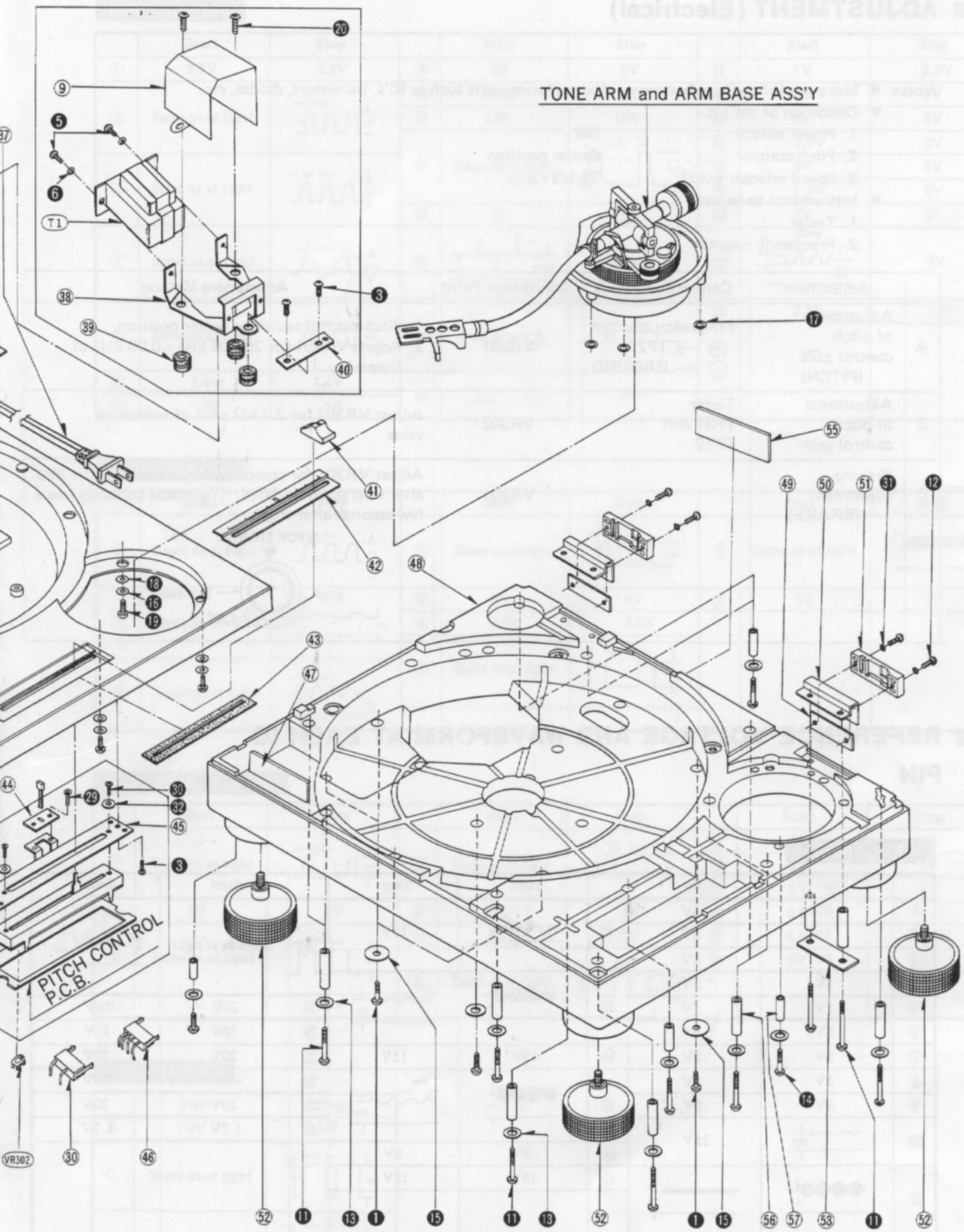
TONE ARM and ARM BASE ASS'Y
PITCH CONTROL P.C.B.
VR302
T1

■ REPLACEMENT PARTS LIST (Mechanical)

Notes: 1. Part numbers are indicated on most mechanical parts.
Please use this number for parts orders.
2. ⚠ indicates that only parts specified by manufacturer be used for safety.
3. SL-1200MK2 (XG) ⟶ [XG], SL-1200MK2 (XA) ⟶ [XA], SL-1200MK2(XGB) ⟶ [XGB]
SL-1200MK2 (XAL) ⟶ [XAL], SL-1200MK2 (E) ⟶ [E]

Ref. No.		Part No.	Part Name & Description
CABINET and CHASSIS PARTS			
1		SFAD122-01A	Dust Cover
2		SFTG172-01	Turntable Mat
3		SFTE172-01Z	Turntable
4		SFUM172-05	Cover, Turntable
5		SFMGQ20-01	Cover, Stater Frame Ass'y
6		SFMG520-31A	Stater Frame
7		SFMZ172-01E	FG Detector Coil Ass'y
8		SFMZQ20-01A	Shaft, Stater Frame Ass'y
9		SFUP122-12	Plate, Shield
10		SFAC122-01	Cabinet
11		SFUM172-04	Ornament, Stylus-illuminator
12		SFKT122-01	Knob, Power Switch
13		SFKK122-01E	Case, Strobe-illuminator
14		SFKT015-06	Knob, Start/Stop Switch
15		SFQA122-01	Spring, Start/Stop Knob
16		SFUM122-01	Base, Operation
17		SFKT015-01E	Knob, Speed Selector (33-1/3 r.p.m.)
18		SFDJ122-02E	Connector, 7-PIN
19		SFGZ122-01	Spacer, Rubber (Speed Selector)
20		SFYB5-32	Ball, Switch Cam
21		SFQA520-01	Spring, Switch Cam
22		SFUM122-03	Cam, Switch
23		SFUM015-11	Spacer, LED
24		SFKK172-01	Cover, Lamp
25		SFXB122-02	Boss, Drive
26		SFQA172-01	Spring, Drive Boss
27		SFXJ172-01	Pin, Lock Canceler
28		SFUP122-02E	Bracket, Stylus-illuminator
29		SFUP122-03	Plate, Lock OPeration
30		SFDJ122-03E	Connector, 3-PIN
31		SFXO172-01	Pin, Guide
32		SFQA520-01	Spring, Lock Canceler Pin
33		SFQA001-02	Spring, Lock Operating Plate M'tg
34		SFXJ172-05	Pin, Lock Operating Plate M'tg
35 except [XAL]		SFSR4N4	Clamper, AC Cord
35 [XAL] only		SFHK040L	Clamper, AC Cord
36 except [XAL]		SFUP025X01	Bracket, AC Cord
36 [XAL] only		SFUP025-01	Bracket, AC Cord
37 except [XAL]	⚠	RJA23ZC	AC Cord
37 [XAL] only	⚠	QFC1208M	AC, Cord
38		SFUP132-03	Bracket, Power Transformer
39		SFGC122-01	Cushion, Power Transformer
40		SFUP122-10	Spacer, Power Transformer
41		SFKT122-02	Knob, Pitch Control Volume
42		SFKK122-03	Ornament, Pitch Control Volume
43		SFUZ122-01	Shading Cloth, Pitch Control Volume
44		SFUP122-09	Holder, LED
45		SFUP122-01	Bracket, Pitch Control Volume
46		SFDJ122-01E	Connector, 4-PIN
47		SFUP122-13	Supporter, Bottom Base
48		SFAU122-01	Base, Bottom
49		SFUP122-05	Supporter (A), Hinge
50		SFUP122-04	Supporter (B), Hinge
51		SFUM170-07	Case, Hinge
52		SFGC122-02E	Audio Insulator
53		SFUP122-06	Supporter (C), Hinge
54		SFKT015-02E	Knob, Speed Selector (45 r.p.m)
55 [XG, XA, XGB]		SFNN122N01	Name Plate
55 [XAL]		SFNN122L01	Name Plate
55 [E]		SFNN122S01	Instruction Book
56		SFXO122-01	Pipe (A)
57		SFXO122-02	Pipe (B)
58		SFAT122-01A	Hinge Ass'y
TONE ARM and ARM BASE			
61		SFPCC31001K	Head Shell
62		SFPAM18201K	Tone Arm Ass'y
63		SFPWG17201K	Balance Weight Ass'y
64		SFPRT18201K	Lift Ass'y
65		SFPZB17202	Knob, Arm Base Lock
66		SFQA829-03	Spring, Lift Ass'y
67		SFPAB13202	Knob, Arm Lift
68		SFPJL18202K	Oil Damper
70		SFPZB12203	Plate, Arm Base Cover
71		SFUM170-06	Spacer, Phono Cord
72		SFPZB12204	Clamper, Phono Cord
73		SFPAB18201K	Tone Arm Fixing Plate Ass'y

Ref. No.		Part No.	Part Name & Description
74		SFPZB12201K	Plate, Position Fix
75		SFDH028-01	Phono Cord
76		SFEL028-01E	Ground Wire
77		SFPRT17201K	Arm Rest
78		SFPKD17203	Arm Base
79		SFPKB17201S	Ring, Arm Base Operation
80		SFPKD12201	Bracket, Arm Base
81		SFPAB17206	Knob, Anti-skate Force Control
82		SFGK132-01	Cap, Rubber
SCREWS, WASHERS and CIRCLIPS			
❶		**XTN3+8BFZ**	Screw
❷		SFXGQ20-02	Screw
❸		**XTN3+8B**	Screw
❹		**XTN26+6B**	Screw
❺		**XTN4+10B**	Screw
❻		**XWA4B**	Washer
❼		**XUC3FT**	Circlip
❽		**XUC2FT**	Circlip
❾		**XUC25FT**	Circlip
❿		SFXW910J02	Washer
⓫		**XTN3+40BFZ**	Screw
⓬		**XSN3+10BVS**	Screw
⓭		XWE3F12FZ	Washer
⓮		**XTN3+25BFZ**	Screw
⓯		SFXW122-01	Washer
⓰		**XWE3E10**	Washer
⓱		SFPEW1100	Washer
⓲		SFPEW11003	Washer
⓳		**XSN3+8S**	Screw
⓴		SFXG132-01	Screw
㉑		**XTV3+8BFN**	Screw
㉒		**XTN3+10B**	Screw
㉓		**XTN2+10B**	Screw
㉔		XSN17+3FY	Screw
㉕		**XSN3+14S**	Screw
㉖		SFXW172-04	Washer
㉗		XUB14FT	Circlip
㉘		SFUZ172-05	O Ring
㉙		**XTN3+6B**	Screw
㉚		**XSN3+6S**	Screw
㉛		**XWA3BFZ**	Washer
㉜		**XWA3B**	Washer
㉝		**XWG3**	Washer
㉞		SFXG829-1	Screw
㉟		**XUC5FT**	Circlip
㊱		**XTW3+6B**	Screw
㊲		**XTV3+6BFN**	Screw
㊳		**XWE4A10EW**	Washer
㊴		**XTN3+25B**	Screw
㊵		XYN3+C6FZS	Screw
㊶		**XSN3+12BVS**	Screw
㊷		SFPEW17201	Washer
㊸		XWG26	Washer
ACCESSORIES			
A1 except [E]		SFNU122X01	Instruction Book
A1 [E] only		SFNU122S01	Instruction Book
A2		SFWE010	Adaptor, 45 r.p.m.
A3		SFPEN3302	Nut, Cartridge
A4		SFPEW9601	Washer, Cartridge
A5		SFCZV8801	Screw, Cartridge
A6		SFPEV9801	Screw, Cartridge
A7		SFKO135-01	Overhang Gauge
A8		SFPZB3501	Shell Weight
A9 [XA] only		SFDKI19118	Plug, 2-PIN
PACKINGS			
P1		SFHP122M01	Carton
P2		SFHH122-01	Pad, Front
P3		SFHH122-02	Pad, Rear
P4		SFHD122-01	Pad, Top
P5		SFHD122-02	Pad, (A), Turntable
P6		SFHD122-03	Pad, (B), Turntable
P7		SFYH60X60	Polyethylene Cover, Turntable Unit and Dust Cover
P8		SFYH40X45	Polyehtylene Cover, Turntable

■ EXPLODED VIEWS

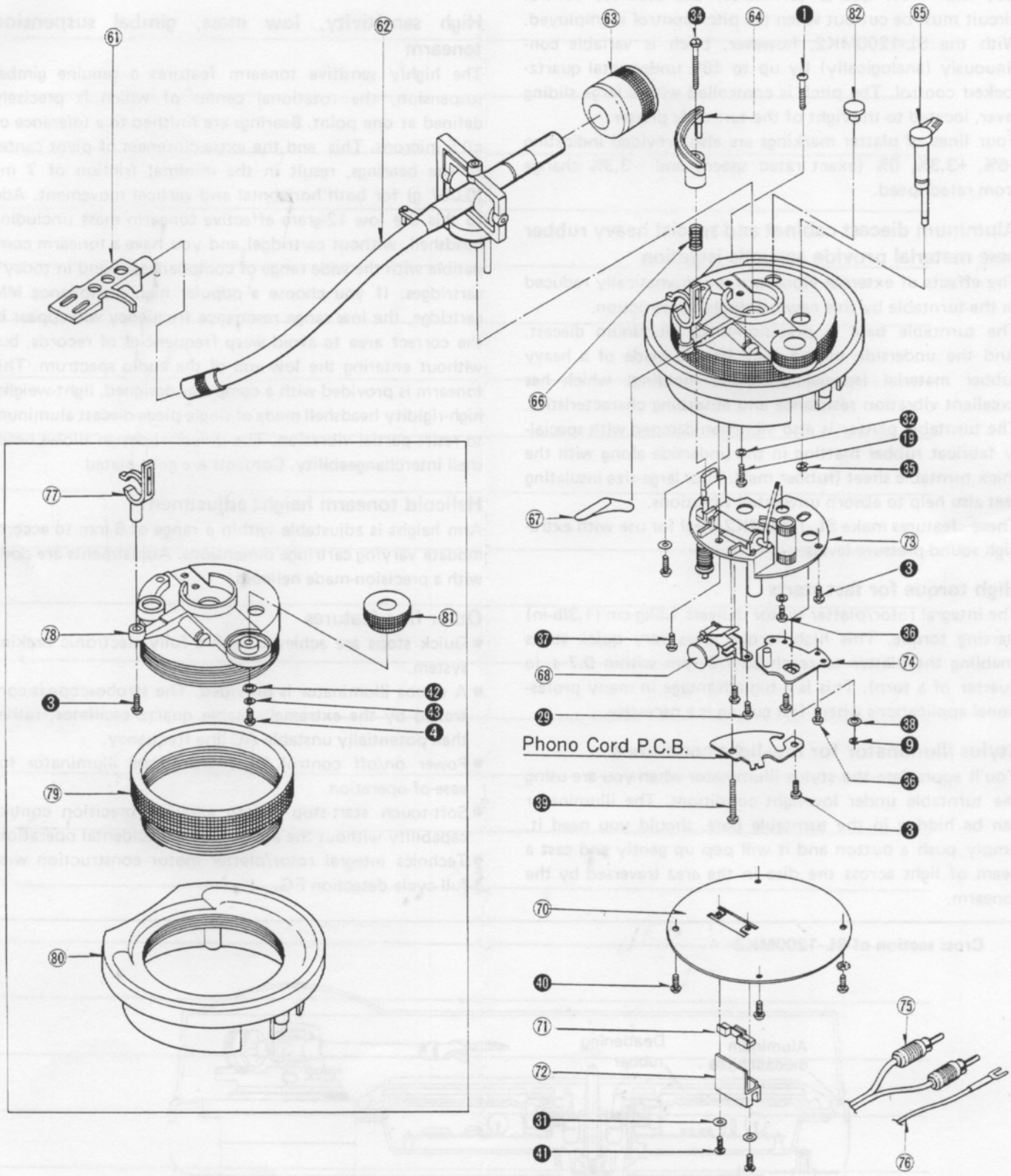

■ FEATURES

Total quartz locked continuous pitch adjustment ±8%

Quartz-phase-locked control means almost perfect accuracy of turntable rotation.

But with most quartz turntables, this accurate control circuit must be cut out when the pitch control is employed. With the SL-1200MK2, however, pitch is variable continuously (analogically) by up to ±8% under total quartz-locked control. The pitch is controlled with a large sliding lever, located to the right of the turntable platter.

Four lines of platter markings are also provided indicating +6%, +3.3%, 0% (exact rated speed) and −3.3% change from rated speed.

Aluminum diecast cabinet and special heavy rubber base material provide acoustic isolation

The effects of external vibrations are dramatically reduced in the turntable by this new turntable construction.

The turntable base is precision-made aluminum diecast. And the underside of the main base is made of a heavy rubber material (special one-piece molding) which has excellent vibration resistance and absorbing characteristics. The turntable platter is also vibration-damped with specially fabricat rubber matting in the underside along with the thick turntable sheet (rubber mat). Four large-size insulating feet also help to absorb unwanted vibrations.

These features make SL-1200MK2 ideal for use with extra-high sound pressure levels.

High torque for fast starts

The integral rotor/platter motor delivers 1.5kg·cm (1.3lb·in) starting torque. This high torque gives very quick starts enabling the platter to reach 33-1/3 rpm within 0.7 s. (a quarter of a turn). This is a big advantage in many professional applications where fast cueing is a necessity.

Stylus illuminator for low-light conditions

You'll appreciate the stylus illuminator when you are using the turntable under low-light conditions. The illuminator can be hidden in the turntable base, should you need it, simply push a button and it will pop up gently and cast a beam of light across the disc in the area traversed by the tonearm. You can then clearly see the spaces between the selections on the record, and cue the arm exactly where you want it. The illuminator can then be pushed back down into the base.

High sensitivity, low mass, gimbal suspension tonearm

The highly sensitive tonearm features a genuine gimbal suspension, the rotational center of which is precisely defined at one point. Bearings are finished to a tolerance of ±0.5 microns. This and the extra-closeness of pivot center to the bearings, result in the minimal friction of 7 mg (0.007 g) for both horizontal and vertical movement. Add to this the low 12-gram effective tonearm mass (including headshell, without cartridge) and you have a tonearm compatible with the wide range of compliances found in today's cartridges. If you choose a popular high compliance MM cartridge, the low range resonance frequency will appear in the correct area to avoid warp frequencies of records, but without entering the low end of the audio spectrum. This tonearm is provided with a computer designed, light-weight, high-rigidity headshell made of single-piece diecast aluminum to resist partial vibration. The universal design allows headshell interchangeability. Contacts are gold-plated.

Helicoid tonearm height adjustment

Arm height is adjustable within a range of 6 mm to accommodate varying cartridge dimensions. Adjustments are done with a precision-made helicoid.

Other fine features

- Quick stops are achieved with a fully electronic braking system.
- A strobe illuminator is provided. The stroboscope is controlled by the extremely stable quartz oscillator, rather than potentially unstable AC line frequency.
- Power on/off control built-into strobe illuminator for ease-of-operation.
- Soft-touch start·stop switch allowing precision control capability without the annoyance of accidental operation.
- Technics integral rotor/platter motor construction with full cycle detection FG.

Cross section of SL-1200MK2

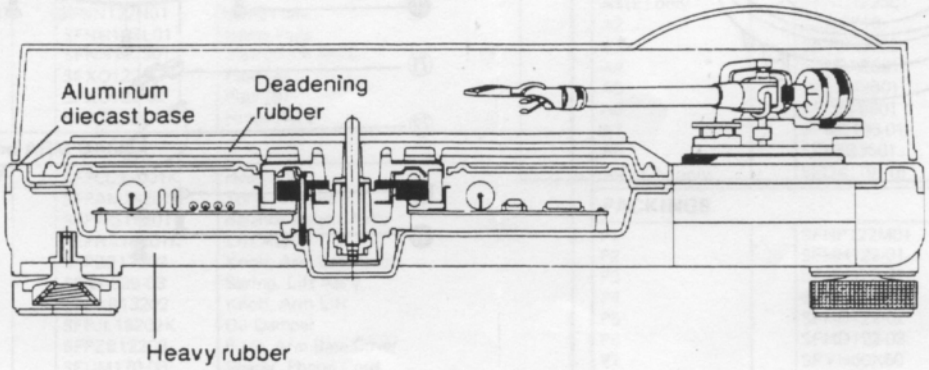

Fig. 24