Deze download wordt u gratis aangeboden door Pick-upnaalden.nl

| | | |
|---|---|---|
| Web | : | www.pickupnaalden.com |
| Email | : | info@pick-upnaalden.nl |
| Facebook | : | www.facebook.com/pickupnaalden |
| Twitter | : | twitter.com/Pickupnaalden |
| Google+ | : | https://plus.google.com/+FCaris_pickupnaalden |

Hello all,

Finally, here it is. The service manual of the famous Technics SL1200Mk2 turntables.
If you didn't noticed already, some pages are missing, but those pages weren't very interesting or they were in German language. And that is the last thing you want ;-)

Some pages have to be layed next to each other to get the whole picture, like pages 13, 14 and 16 and 17.

Don't come complaining about the quality of the scanned pictures, because at www.1200s.com you have to pay 20 USDollars for it and now it is for free. Don't tell anyone. ;-)

We hope you can use the service manual for whatever purpose!
have a nice time..

Robert Jan
www.backspin.org

ORDER NO. DAD9400/S0

# Service Manual

Supplement

Nieuw

Kast Schakeling SFUP122-23 SFUP122-24. SFUM102N04.

Turntable System

## SL-1200MK2

[M], [MC],

[E], [EK], [XL], [EG], [EB], [EH],

[EF], [Ei], [XA], [PA], [PE], [PC]

## SL-1210MK2

[E], [EG], [EH]

**Areas**

- * [M] is available in the U.S.A.
- * [MC] is available in Canada.
- * [E] is available in Switzerland and Scandinavia.
- * [EK] is available in United Kingdom.
- * [XL] is available in Australia.
- * [EG] is available in F.R. Germany.
- * [EB] is available in Belgium.
- * [EH] is available in Holland.
- * [EF] is available in France.
- * [Ei] is available in Italy.
- * [XA] is available in Southeast Asia, Oceania, Africa, Middle Near East and Central South America.
- * [PA] is available in far East PX.
- * [PE] is available in European Military.
- * [PC] is available in European Audio Club.

*SL-1200MK2 is the model for silver type.
*SL-1210MK2 is the model for black type of SL-1200MK2.

**Please use this manual together with the service manual for Model No. SL-1200MK2/1210MK2.**

English

## Specifications

Specifications are subject to change without notice for further improvement.
Weight and dimensions shown are approximate.

### ■ General

| | |
|---|---|
| **Power supply:** | 120V, AC 60 Hz (For [M], [MC] areas)<br>~110-120/220-240V, 50 or 60 Hz<br>(For other areas) |
| **Power consumption:** | 14 W (For [M], [MC] areas)<br>13.5 W (For other areas) |
| **Dimensions:**<br>**(W x H x D)** | 45.3 x 16.2 x 36 cm<br>(17-27/32" x 6-19/64" x 14-11/64") |
| **Weight:** | 12.5 kg (27.6 lb) |

### Turntable section

| | |
|---|---|
| **Type:** | Quartz direct drive<br>Manual turntable |
| **Dirve method:** | Direct drive |
| **Motor:** | Brushless DC motor |
| **Turntable platter:** | Aluminum diecast<br>Diameter 33.2 cm (13-5/64")<br>Weight 2 kg (4.4 lb) |
| **Turntable speeds:** | 33-1/3 rpm and 45 rpm |
| **Starting torque:** | 1.5 kg · cm (1.3 lb · in) |
| **Build-up characteristics:** | 0.7 s. from standstill to 33-1/3 rpm |
| **Braking system:** | Electronic brake |
| **Wow and flutter:** | 0.01% WRMS*<br>0.025% WRMS (JIS C5521)<br>± 0.035% peak (IEC 98A Weighted) |

* This rating refers to turntable assembly alone, excluding effects of record, cartridge or tonearm, but including platter. Measured by obtaining signal from built-in frequency generator of motor assembly.

| | |
|---|---|
| **Rumble:** | –56 dB (IEC 98A Unweighted)<br>–78 dB (IEC 98A Weighted) |

Matsushita
Service Com
50 Meadowl
Secaucus, N

Panasonic - CENTRE NEDERLAND
servicom bv

Technics

Pani
Matsushita Elec
1-2, 1-chome, Shibak

Balie Service Manual

# SL-1200MK2/1210MK2

## ■ Tonearm section

| | |
|---|---|
| **Type:** | Universal |
| **Effective length:** | 230 mm (9-1/16") |
| **Arm height adjustment range:** | 0 – 6 mm |
| **Overhang:** | 15 mm (19/32") |
| **Effective mass:** | 12 g (without cartridge) |
| **Offset angle:** | 22° |
| **Friction:** | Less than 7 mg (lateral, vertical) |
| **Tracking error angle:** | Within 2°32' (at the outer groove of 30 cm (12") record<br>Within 0°32' (at the inner groove of 30 cm (12") record |
| **Stylus pressure adjustment range:** | 0 – 2.5 g |
| **Applicable cartridge weight range:** | 6 – 10 g<br>13.5 – 17.5 g (including headshell) |
| **(with auxiliary weight):** | 9.5 – 13 g<br>17 – 20.5 g (including headhsell) |
| **(with shell weight):** | 3.5 – 6.5 g<br>11 – 14 g (including headshell) |
| **Headshell weight:** | 7.5 g |

## Notes

- ★ To improve the performance of SL-1200MK2/1210MK2, the bottom structure and circuit are changed in the course of production.
- ★ After the change, SL1200MK2–A/1210MK2–A is indicated in the name plate as the model of the set. It is discriminated from before-change set by –A. Also, check that the present change is of the sets after the change mark [D] shown in the sirial No. sheet attached to the bottom and carton box.
- ★ This supplement service manual contains the bottom plate disassembly procedure, change part No., circuit diagram, P.C.B. and block diagrams. The other contents are the same as for the service manual of SL-1200MK2/1210MK2 already issued.
- ★ Sets with cartridge (EPC-207C) are included in those for same areas.
- ★ Since the power transformer fitting method is different for sets with serial number sheet change mark [E], refer to the development plan on page 8.

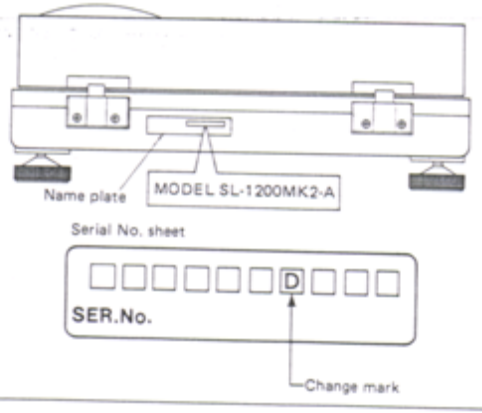


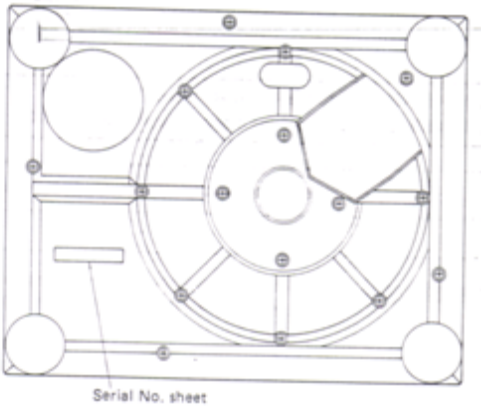


Deutsch

# TECHNISCHE DATEN

Änderungen der technischen Daten vorbehalten.
Die angegebenen Gewichts- und Abmessungsdaten sind ungefähre Werte.

## ■ Allgemeine Daten

| | |
|---|---|
| **Stromversorgung:** | ~110-120/220-240 V, 50/60 Hz Wechselstrom |
| **Leistungsaufnahme:** | 13,5 W |
| **Abmessungen: (B × H × T):** | 45,3 × 16,2 × 36 cm |
| **Gewicht:** | 12,5 kg |

## ■ Plattenspieler

| | |
|---|---|
| **Typ:** | Manueller Quarz-Direktantrieb-Plattenspieler |
| **Antrieb:** | Direktantrieb |
| **Motor:** | Kollektorloser Gleichstrommotor |
| **Plattenteller:** | Aluminium-Spritzguß<br>Durchmesser 33,2 cm<br>Gewicht 2 kg |
| **Plattenteller-Drehzahlen:** | 33-1/3 und 45 U/min |
| **Anlautdrehmoment:** | 1,5 kg · cm |
| **Drehzahl-Hochlaufzeit:** | 0.7 s. vom Stillstand auf 33-1/3 U/min |
| **Bremssystem:** | Elektronische Bremse |
| **Gleichlaufschwankungen:** | 0,01% WRMS*<br>0,025% WRMS (JIS C5521)<br>± 0,035% Spitze (IEC 98A bewertet) |

* Diese Nennleistung bezieht sich auf das Laufwerk-Bauteil allein, ausschließlich Einflüsse von Schallplatte, Tonabnehmer oder Tonarm, aber einschließlich Plattenteller.
Gemessen anhand von Signalen vom eingebauten Frequenzgenerator des Motorbauteils.

| | |
|---|---|
| **Rumpel-Geräusch-spannungsabstand:** | –56 dB (IEC 98A unbewertet)<br>–78 dB (IEC 98A bewertet) |

- **How to remove the hinge case**

1. Remove the bottom cover. (Refer to "How to remove the bottom cover".)
2. Remove the 4 setscrews (Fig. 2 : ❺) of the hinge case bracket.
3. Remove the 4 setscrews (Fig. 2 : ❻) of the hinge case.

Note: The other disassembly procedure are the same as for before-change sets.

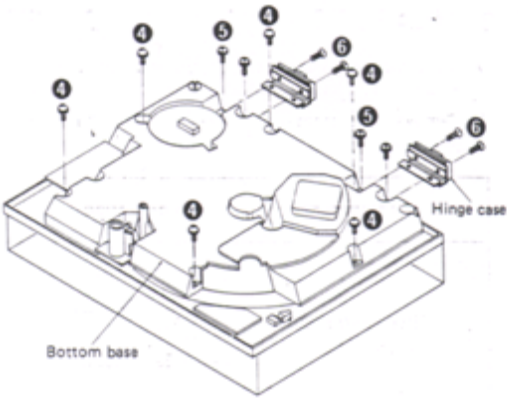


Fig. 2

## ■ REPLACEMENT PARTS LIST

Notes:

1. This parts list mentions only the difference between before and after change of SL-1200MK2/1210MK2.
2. Ⓚ-marked parts are used only for SL-1210MK2 (black type). And O-marked parts are used for SL1200MK2 (silver type).
3. Parts other than Ⓚ- and O-marked are used for both SL-1210MK2 and SL-1200MK2.
4. The "Ⓢ" mark is service standard parts and may differ from production parts.

**Areas**

- * [M] is available in the U.S.A.
- * [MC] is available in Canada.
- * [E] is available in Switzerland and Scandinavia.
- * [EK] is available in United Kingdom.
- * [XL] is available in Australia.
- * [EG] is available in F.R. Germany.
- * [EB] is available in Belgium.
- * [EH] is available in Holland.
- * [EF] is available in France.
- * [EI] is available in Italy.
- * [XA] is available in Southeast Asia, Oceania, Africa, Middle Near East and Central South America.
- * [PA] is available in far East PX.
- * [PE] is available in European Military.
- * [PC] is available in European Audio Club.

The Integrated ckt Pg 10-11

| Ref. No. | Change of Part No. SL-1200MK2 (Before Change) | → SL-1200MK2/1210MK2 (After Change) | Part Name & Description | Per Set (Pcs.) | Remarks |
|---|---|---|---|---|---|
| **INTEGRATED CIRCUIT** | | | | | |
| IC302 | SVITC4011BP | MN4011B | NAND Gate | 1 | |
| **TRANSISTOR** | | | | | |
| Q1 | 2SD389A–Q | 2SD1265 | Regulator | 1 | |
| **DIODES** | | | | | |
| D1 | SVDS1RBA40 | SVDS1RBA20Z | Rectifier | 1 | △ |
| D201, 202 | SVDSR–105C | SVDPR3902S–9 | Speed Indicator | 2 | |
| D203 ~ 206 | SVDEBR5505S | SVDSLH54VT3 | Strobe | 4 | |
| D401 | SVDGL–9PG2 | SVDGL–9NG2 | Pitch Indicator | 1 | |
| **CRYSTAL** | | | | | |
| X201 | SVQU306115 | SVQMS4193 | 4.193 MHz, Oscillator | 1 | |
| **VARIABLE RESISTORS** | | | | | |
| VR301 | EVMH2GA00B53 | EVMH1GA00B23 | Pitch Control Adjustment, 2kΩ (B) | 1 | |
| VR303 | EVBJ05C19ABE | SFDZ122N11 | Pitch Control | 1 | |
| **SWITCHES** | | | | | |
| S203 | SFDSSS5GL13C | SFDSSS01GL13 | Start/Stop | 1 | |
| S601 | SFDSSS5GL13S | SFDSSS5GL13P | Power | 1 | △ |
| **TRANSFORMER** | | | | | |
| T1 | SLT60EU7B | SLT66DTL3A [M] | Power Source | 1 | △ |
| T1 | SLT60E31C | SLT66DT14C [MC] | Power Source | 1 | △ |
| T1 | SLTF5900 | SLT66DTE13A [Other areas] | Power Source | 1 | △ |

| Ref. No. | Change of Part No. SL-1200MK2 (Before Change) | → SL-1200MK2/1210MK2 (After Change) | Part Name & Description | Per Set (Pcs.) | Remarks |
|---|---|---|---|---|---|
| **RESISTORS** | | | | | |
| R4 | ERD25FJ561 | ERD25FJ471 | Carbon, 1/4W, 470Ω | 1 | Ⓢ |
| R209 | ERD25TJ154 | ERD25TJ334 | Carbon, 1/4W, 330kΩ | 1 | Ⓢ |
| R211 | ERD25FJ103 | ERD25FJ472 | Carbon, 1/4W, 4.7kΩ | 1 | Ⓢ |
| R212 | ERD25FJ121 | ERD25FJ151 | Carbon, 1/4W, 150Ω | 1 | Ⓢ |
| R222 | Addition | ERD25FJ391 | Carbon, 1/4W, 390Ω | 1 | Ⓢ |
| R301 | ERO25CKF3301 | ERO25CKF2701 | Metal Film, 1/4W, 2.7kΩ | 1 | Ⓢ |
| R304 | ERD25FJ152 | ERD25FJ561 | Carbon, 1/4W, 560Ω | 1 | Ⓢ |
| R401 | Addition | ERD50FJ152 | Carbon, 1/2W, 1.5kΩ | 1 | Ⓢ |
| R601 | ERD25FJ4R7 | ERD50FJ4R7 | Carbon, 1/2W, 4.7Ω | 1 | △ Ⓢ |
| **CAPACITORS** | | | | | |
| C5, 6 | Addition | ECQM1223KZ | Polyester, 125V, 0.022μF | 1 | △ |
| C104 ~ 107 | ECQM1H104KZ | ECQM1H104JZ | Polyester, 50V, 0.1μF | 4 | Ⓢ |
| C109, 110 | ECQM1H104KZ | ECQM1H104JZ | Polyester, 50V, 0.1μF | 2 | Ⓢ |
| C111 | ECQM1H562KZ | ECQM1H562JZ | Polyester, 50V, 0.0056μF | 1 | Ⓢ |
| C204 | ECQM1H473KZ | ECQM1H473JZ | Polyester, 50V, 0.047μF | 1 | Ⓢ |
| C210 | ECQM1H224KZ | ECQM1H224JZ | Polyester, 50V, 0.22μF | 1 | Ⓢ |
| C211 | ECQM1H473KZ | ECQM1H473JZ | Polyester, 50V, 0.047μF | 1 | Ⓢ |
| C217 ~ 219 | Addition | ECKD1H104ZF | Ceramic, 50V, 0.1μF | 1 | Ⓢ |
| C301 | ECQK1123FZ | ECQK1333GZ | Polyester, 125V, 0.033μF | 1 | |
| C302 | ECQK1123FZ | ECQK1682GZ | Polyester, 125V, 0.0068μF | 1 | |
| C305 | ECQM1H122KZ | ECQM1H122JZ | Polyester, 50V, 0.0012μF | 1 | Ⓢ |
| **CABINET and CHASSIS PARTS** | | | | | |
| 9 | SFUP122–12 | Deletion | ---------- | 0 | |
| 10 | SFAC122–01 | SFAC122–01 | Cabinet (Silver) | 1 | ○ |
| | | SFAC124S01 | Cabinet (Black) | 1 | Ⓚ |
| 25 | SFXB122–02 | SFXB122–06 | Boss, Drive | 1 | |
| 33 | SFQA001–02 | SFQA122–03 | Spring | 1 | |
| 36 | SFUP025–01 | SFUP122–16 [M, MC, PA, PE, PC] | Bracket, AC Cord | 1 | |
| | SFUP025X01 | SFUP122X01 [Other areas] | Bracket, AC cord | 1 | |
| 38 | SFUP132–03 | SFGC122–03 | Cushion | 2 | |
| 40 | SFUP122–10 | Deletion | ---------- | 0 | |
| 42 | SFKK122–03 | SFKK122–03 | Plate (Silver) | 1 | |
| | | SFKK124S01 | Plate (Black) | 1 | |
| 48 | SFAU122–01 | SFAU122–02 | Bottom Base | 1 | |
| 48–1 | Addition | SFAU122–03 | Bottom Cover | 1 | |
| 49 | SFUP122–05 | SFUP122–23 | Supporter (A), Hinge | 2 | |
| 50 | SFUP122–04 | SFUP122–24 | Supporter (B), Hinge | 2 | |
| 51 | SFUM170–07 | SFUMM02N04 | Case, Hinge | 2 | |
| 55 | SFNN122M01 | SFNN122M10 [M] | Name Plate | 1 | ○ |
| | SFNN122C01 | SFNN122C10 [MC] | Name Plate | 1 | ○ |
| | SFNN122S01 | SFNN122S10 [E] | Name Plate | 1 | ○ |
| | SFNN122L01 | SFNN122G10 [EK, XL] | Name Plate | 1 | ○ |
| | SFNN122X01 | SFNN122X10 [XA] | Name Plate | 1 | ○ |
| | Addition | SFNN122P10 [PA, PE] | Name Plate | 1 | ○ |
| | Addition | SFNN122P11 [PC] | Name Plate | 1 | ○ |
| | SFNN122N01 | SFNN122N10 [Other areas] | Name Plate | 1 | ○ |
| | Addition | SFNN124S10 [E] | Name Plate | 1 | Ⓚ |
| | Addition | SFNN124Q10 [EG, EH] | Name Plate | 1 | Ⓚ |
| 56 | SFX0122–01 | Deletion | ---------- | 0 | |
| 57 | SFX0122–02 | Deletion | ---------- | 0 | |
| 58 | SFAT122–01A | SFATM02N01A | Hinge | 1 | |

| Ref. No. | Change of Part No. SL-1200MK2 (Before Change) | → SL-1200MK2/1210MK2 (After Change) | Part Name & Description | Per Set (Pcs.) | Remarks |
|---|---|---|---|---|---|
| **TONEARM PARTS** | | | | | |
| 62 | SFPAM18201K | SFPAM18201K | Tonearm Ass'y (Silver) | 1 | ○ |
| | | SFPAM18202K | Tonearm Ass'y (Black) | 1 | Ⓚ |
| 79 | SFPKB17201S | SFPKB17204E | Ring, Arm Base Operation | 1 | |
| 82 | SFGK132–01 | SFGK132–01 | Cap (Silver) | 1 | ○ |
| | | SFGK133S01 | Cap (Black) | 1 | Ⓚ |
| **ACCESSORIES** | | | | | |
| A1 | SFNU122M01 | SFNU122M06 [M] | Instruction Book | 1 | |
| | SFNU122C01 | SFNU122C06 | Instruction Book | 1 | |
| | SFNU122S01 | SFNU122S01 [E] | Instruction Book | 1 | |
| | SFNU122G01 | SFNU122G01 [EK] | Instruction Book | 1 | |
| | Addition | SFNU122P01 [PA, PE, PC] | Instruction Book | 1 | |
| | SFNU122X01 | SFNU122X01 [Other areas] | Instruction Book | 1 | |
| A2 | SFWE010 | SFWE122–01 | 45 Adaptor | 1 | |
| **PACKING PARTS** | | | | | |
| P1 | SFHP122C01 | SFHP122C02 [MC, EF] | Carton Box (Silver) | 1 | ○ |
| | SFHP122M01 | SFHP122M02 [Other areas] | Carton Box (Silver) | 1 | ○ |
| | | SFHP124S02 | Carbon Box (Black) | 1 | Ⓚ |
| P9 | Addition | SPB1083 | Polyethylene Bag, Accessories | 2 | |
| P10 | Addition | SPJ15 | Polyethylene Bag, Shell Weight | 1 | |
| P11 | Addition | SFHZD03M01 | Polyethylene Bag, Dust Cover | 3 | |
| P12 | Addition | SFHZ122–01 | Polyethylene Bag, 45 Adaptor | 1 | |
| P13 | Addition | SPP189 | Polyethylene Bag, Cords | 2 | |

## ■ ADJUSTMENT POINTS

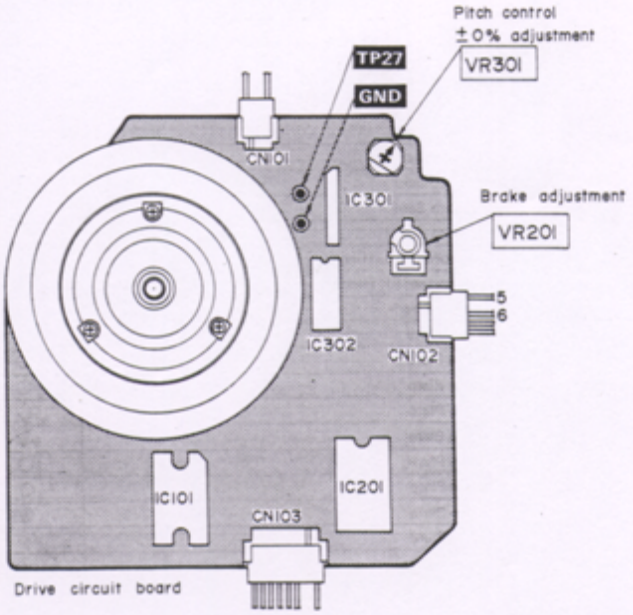


Fig. 3 (Abb. 3)

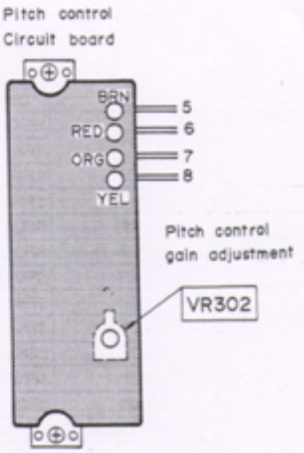


Fig. 4 (Abb. 4)

## ■ MEASUREMENTS AND ADJUSTMENTS — English

- **Conditions of set, and instruments used**

1. Remove the panel cover.
2. Remove the bottom cover (when adjusting the pitch control gain).
3. Frequency counter
4. Tester

| | Adjustment | Connection | Parts adjusted | Procedure |
|---|---|---|---|---|
| 1 | Pitch control ± 0% adjustment | Frequency counter<br>(+) – TP27<br>(–) – Earth point | VR301<br>(Fig. 3) | 1. Connect the frequency counter and turn the power supply ON.<br>2. Set the pitch control knob to "0". (Indicator lights up.)<br>3. Adjust VR301 so that the frequency is 262.08 kHz ± 0.05 kHz. |
| 2 | Pitch control gain adjustment | Tester<br>(+) – CN102 terminal ⑤<br>(–) – CN102 terminal ⑥ | VR302<br>(Fig. 4) | 1. Set the pitch control knob to "0".<br>2. Pull out the connector CN102 of drive P.C.B.<br>3. Connect the tester to terminals,⑤and⑥of connector CN102 on the pitch control P.C.B. side.<br>4. Adjust VR302 so that the resistance value of the tester is 2.7 kΩ ± 0.1 kΩ. |
| 3 | Brake adjustment | ——— | VR201<br>(Fig. 3) | 1. Adjust VR201 so that the rotation at 33 r.p.m. stops within the angle of 90° ~120° after depressing the stop button. |

## ■ MESSUNGEN UND JUSTIERUNGEN — Deutsch

- **Zustand des Gerätes und zu verwendende Instrumente**

1. Die Abdeckplatte entfernen.
2. Die Bodenadbeckung entfernen (wenn die Drehzahlregelungs-Verstärkung justiert werden soll).
3. Frequenzzähler
4. Prüfgerät

| | Justierung | Anschlüsse | Zu justierender Teile | Vorgehen |
|---|---|---|---|---|
| 1 | ± 0%-Justierung des Drehzahlreglers | Frequenzzähler<br>(+) – TP27<br>(–) – Massepunkt | VR301<br>(Abb. 3) | 1. Frequenzzähler anschließen und Netzschalter einschalten.<br>2. Drehzahlreglerknopf auf "0" stellen. (Anzeige leuchtet auf.)<br>3. VR301 so justieren, daß die Frequenz 262,08 kHz ± 0,05 kHz beträgt. |
| 2 | Justierung der Drehzahlregelungs-Verstärkung | Prüfgerät<br>(+) – CN102 Anschluß ⑤<br>(–) – CN102 Anschluß ⑥ | VR302<br>(Abb. 4) | 1. Den Drehzahlreglerknopf auf "0" einstellen.<br>2. Steckverbindung CN102 von der Antriebsplatine hrausziehen.<br>3. Prüfgerät an Anschlüsse⑤und⑥der Steckverbindung CN102 auf der Drehzahlreglerseite der Platine anschließen.<br>4. VR302 so justieren, daß der Widerstandswert des Prüfgerätes 2,7 kΩ ± 0,1 kΩ beträgt. |
| 3 | Bremsjustierung | ——— | VR201<br>(Abb. 3) | 1. VR201 so justieren, daß die Rotation bei 33 UPM innerhalb 90° ~ 120° nach Drücken der Stop-Taste stoppt. |

onearm Parts

## ■ RESISTORS AND CAPACITORS

otes:
1. Part numbers are indicated on most mechanical parts. Please use this part number for parts orders.
2. Important safety notice: Components identified by ⚠ mark have special characteristics important for safety. When replacing any of these components use only manufacturer's specified parts.
3. The "Ⓢ" mark is service standard parts and may differ from production parts.
4. Bracketed indications in Ref. No. colum specify the area. Parts without these indications can be used for all area.
5. The unit of resistance is Ω (ohm). K = 1000Ω, M = 1000kΩ
6. The unit capacitance is μF (microfarad). P = $10^{-6}$ μF

**Areas**

* [M] is available in the U.S.A.
* [MC] is available in Canada.
* [E] is available in Switzerland and Scandinavia.
* [EK] is available in United Kingdom.
* [XL] is available in Australia.
* [EG] is available in F.R. Germany.
* [EB] is available in Belgium.
* [EH] is available in Holland.
* [EF] is available in France.
* [Ei] is available in Italy.
* [XA] is available in Southeast Asia, Oceania, Africa, Middle Near East and Central South America.
* [PA] is available in far East PX.
* [PE] is available in European Military.
* [PC] is available in European Audio Club.

### Numbering System of Resistor

Example

| | | | | |
|---|---|---|---|---|
| ERD | 25 | F | J | 101 |
| Type | Wattage | Shape | Tolearance | Value |
| ERX | 2 | AN | J | 2R2 |
| Type | Wattage | Shape | Tolerance | Value |

| Resistor type | Wattage | Tolerance |
|---|---|---|
| ERD: Carbon | 25 : 1/4W | F : ±1% |
| ERG: Metal Oxide | 50 : 1/2W | J : ±5% |
| ERO: Metal Film | 1A : 1W | |
| ERX: Metal Film | 2A : 2W | |

### Numbering System of Capacitor

Example

| | | | | |
|---|---|---|---|---|
| ECKD | 1H | 102 | Z | F |
| Type | Voltage | Value | Tolerance | Peculiarity |
| ECEA | 50 | M | R47 | R |
| Type | Voltage | Reculiarity use | Value | Special use |

| Capacitor Type | | Voltage | | Tolearnce | |
|---|---|---|---|---|---|
| ECEA | : Electrolytic | OJ | : 6.3V | J | : ±5% |
| ECEB | : Electrolytic | 1C | : 16V | K | : ±5% |
| ECCD | : Ceramic | 1E | : 25V | M | : ±20% |
| ECQM | : Polyester | 1H | : 50V | Z | : +80%,−20% |
| ECQU | : Polyester | 1 | : 100V | | |
| ECQF | : Polyester | 1A | : 125V | | |
| ECNC | : Polyester | 4A | : 400V | | |

| Ref. No. | | Part No. | Value |
|---|---|---|---|
| RESISTORS | | | |
| R1 | Ⓢ | ERD25FJ562 | 5.6K |
| R2 | Ⓢ | ERD25FJ682 | 6.8K |
| R3 | Ⓢ | ERD25FJ272 | 2.7K |
| R4,5 | Ⓢ | ERD25FJ471 | 470 |
| R101 | Ⓢ | ERD25FJ103 | 10K |
| R102 | Ⓢ | ERX1ANJ4R7 | 4.7 |
| R103 | Ⓢ | ERD25FJ472 | 4.7K |
| R104 | Ⓢ | ERD25TJ473 | 47K |
| R105 | Ⓢ | ERD25FJ103 | 10K |
| R106 | Ⓢ | ERD25FJ150 | 15 |
| R107 | Ⓢ | ERX1ANJ1R5 | 1.5 |
| R108 | Ⓢ | ERD25FJ103 | 10K |
| R109,110 | Ⓢ | ERX1ANJ4R7 | 4.7 |
| R201 | Ⓢ | ERG1ANJ561 | 560 |
| R202 | Ⓢ | ERD25FJ103 | 10K |
| R203 | Ⓢ | ERD25FJ470 | 47 |
| R204 | Ⓢ | ERD25FJ272 | 2.7K |
| R205 | Ⓢ | ERD25TJ124 | 120K |
| R206 | Ⓢ | ERD25TJ183 | 18K |
| R207 | Ⓢ | ERD25TJ563 | 56K |
| R208 | Ⓢ | ERD25TJ224 | 220K |
| R209 | Ⓢ | ERD25TJ334 | 330K |

| Ref. No. | | Part No. | Value |
|---|---|---|---|
| R210 | Ⓢ | ERD25TJ183 | 18K |
| R211 | Ⓢ | ERD25FJ472 | 4.7K |
| R212 | Ⓢ | ERD25FJ151 | 150 |
| R213 | Ⓢ | ERD25FJ122 | 1.2K |
| R214 | Ⓢ | ERD25TJ223 | 22K |
| R215 | Ⓢ | ERD25FJ472 | 4.7K |
| R216 | Ⓢ | ERD25TJ154 | 150K |
| R217 | Ⓢ | ERD25TJ223 | 22K |
| R218 | Ⓢ | ERD25FJ102 | 1K |
| R219 | Ⓢ | ERD25FJ332 | 3.3K |
| R220 | Ⓢ | ERD25FJ221 | 220 |
| R221 | Ⓢ | ERD25FJ471 | 470 |
| R222 | Ⓢ | ERD25FJ391 | 390 |
| R301 | Ⓢ | ERD25CKF2701 | 2.7K |
| R302 | Ⓢ | ERD25FJ471 | 470 |
| R303 | Ⓢ | ERD25FJ822 | 8.2K |
| R304 | Ⓢ | ERD25FJ561 | 560 |
| R305 | Ⓢ | ERD25FJ181 | 180 |
| R306 | Ⓢ | ERD25TJ223 | 22K |
| R307 | Ⓢ | ERD25FJ272 | 2.7K |
| R401 | ⚠ Ⓢ | ERD50FJ152 | 1.5K |
| R601 | ⚠ Ⓢ | ERD50FJ4R7 | 4.7 |

| Ref. No. | | Part No. | Value |
|---|---|---|---|
| CAPACITORS | | | |
| C1 | | ECEB1HU471 | 470 |
| C2 | | ECEA1EU330 | 33 |
| C3 | | ECEA1EU220 | 22 |
| C5,6 | | ECQM1223KZ | 0.022 |
| C101,102 | | ECEA1EU330 | 33 |
| C103 | | ECEA1EU330 | 33 |
| C104,105 | Ⓢ | ECQM1H104JZ | 0.1 |
| C106,107 | Ⓢ | ECQM1H104JZ | 0.1 |
| C108 | | ECEA1EU101 | 100 |
| C109,110 | Ⓢ | ECQM1H104JZ | 0.1 |
| C111 | Ⓢ | ECQM1H562JZ | 0.0056 |
| C112 | | ECEA1HU4R7 | 4.7 |
| C201 | | ECEA1CU330 | 33 |
| C202,203 | | ECEA1HU010 | 1 |
| C204 | Ⓢ | ECQM1H473JZ | 0.047 |
| C205 | | ECEA0JU221 | 220 |
| C206 | | ECEA1HU010 | 1 |
| C207 | Ⓢ | ECCD1H101K | 100P |
| C208 | Ⓢ | ECCD1H220K | 22P |
| C209 | | ECEA1CU101 | 100 |

| Ref. No. | | Part No. | Value |
|---|---|---|---|
| C210 | Ⓢ | ECQM1H224JZ | 0.22 |
| C211 | Ⓢ | ECQM1H473JZ | 0.047 |
| C212 | | ECEA1HU3R3 | 3.3 |
| C213 | Ⓢ | ECCD1H471K | 470P |
| C214 | | ECEA1CU101 | 100 |
| C215 | | ECEA1HU010 | 1 |
| C216 | | ECEA1CU470 | 47 |
| C217,218 | | ECKD1H104ZF | 0.1 |
| C219 | | ECKD1H104ZF | 0.1 |
| C301 | | ECQK1333GZ | 0.033 |
| C302 | | ECQK1682GZ | 0.0068 |
| C303 | | ECEA1HU010 | 1 |
| C304 | | ECEA1CU100 | 10 |
| C305 | Ⓢ | ECQM1H122JZ | 0.0012 |
| C306 | | ECEA1HU010 | 1 |
| C601 (M) | ⚠ | ECQF1A473MD | 0.047 |
| C601 (MC) | ⚠ | ECQU1A47ME | 0.047 |
| C601 (Other area) | ⚠ | ECNC4A473M | 0.047 |

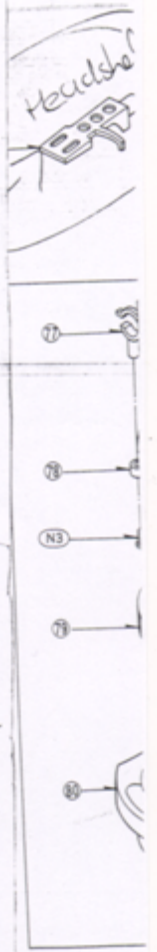

# ■ REPLACEMENT PARTS LIST

**Notes:**
1. Part numbers are indicated on most mechanical parts. Please use this part number for parts orders.
2. Important safety notice: Components identified by ⚠ mark have special characteristics important for safety. When replacing any of these components use only manufacturer's specified parts.
3. Bracketed indications in Ref. No. columns specify the area. Parts without these indications can be used for all areas.
4. The "Ⓢ" mark is service standard parts and may differ from production parts.
5. The parenthesized numbers in the column of description stand for the quantity per set.
6. Ⓚ-marked parts are used only for SL-1210MK2 (black type). And ○-marked parts are used for SL-1200MK2 (silver type).
7. Parts other than Ⓚ-and ○-marked are used for both SL-1210MK2 and SL-1200MK2.

**Areas**

- * [M] is available in the U.S.A.
- * [MC] is available in Canada.
- * [E] is available in Switzerland and Scandinavia.
- * [EK] is available in United Kingdom.
- * [XL] is available in Australia.
- * [EG] is available in F.R. Germany.
- * [EB] is available in Belgium.
- * [EH] is available in Holland.
- * [EF] is available in France.
- * [EI] is available in Italy.
- * [XA] is available in Southeast Asia, Oceania, Africa, Middle Near East and Central South America.
- * [PA] is available in far East PX.
- * [PE] is available in European Military.
- * [PC] is available in European Audio Club.

| Ref. No. | Part No. | Description |
|---|---|---|
| **INTEGRATED CIRCUITS** | | |
| IC101 | AN6675 | Turntable Drive |
| IC201 | AN6680 | Turntable Control |
| IC301 | AN6682 | Pitch Control |
| IC302 | MN4011B | NAND Gate |
| **TRANSISTORS** | | |
| Q1 | 2SD1265 | Regulator |
| Q2,3 | 2SD637 | Regulator |
| Q201 Ⓢ | 2SC1846-R | Regulator |
| Q202 | 2SD637 | LED Driver |
| Q203 Ⓢ | 2SC1328-T | FG Amp. |
| **DIODES** | | |
| D1 ⚠ | SVDS1RBA20Z | Rectifier |
| D2 | MA1051 | 5.1V Zener |
| D201,202 | SVDPR3902S-9 | Speed Indicator |
| D203~206 | SVDSLH54VT3 | Strobe |
| D204A | MA162A | Switching |
| D301 | MA1051 | 5.1V Zener |
| D401 | SVDGL-9NG2 | Pitch Indicator |

| Ref. No. | Part No. | Description |
|---|---|---|
| **CRYSTAL** | | |
| X201 | SVQMS4193 | 4.193MHz Oscillator |
| **VARIABLE RESISTORS** | | |
| VR201 Ⓢ | EVTS3MA00B54 | Brake Adjustment,50kΩⓑ |
| VR301 | EVMH1GA00B23 | Pitch Control±0% Adjustment,2kΩⓑ |
| VR302 Ⓢ | EVTS3MA00B54 | Pitch Control Gain Adjustment,50kΩⓑ |
| VR303 | SFDZ122N11 X | Pitch Control |
| **SWITCHES** | | |
| S201,202 | EVQP5R04K | Speed Selector |
| S203 | SFDSSS01GL13 | Stort/Stop |
| S401 | SFDSD2MSL-C | Stylus-Illuminator |
| S601 ⚠ | SFDSSS5GL13P | Power |
| S602 Except for (M,MC) ⚠ | SFDSHXW01317 | Voltage Selector |

| Ref. No. | Part No. | Description |
|---|---|---|
| **LAMP** | | |
| PL1 ⚠ | SFDN122-01 X | Stylus Illuminator |
| **TRANSFORMER** | | |
| T1 (M) ⚠ | SLT66DTL3A | Power Source |
| T1 (MC) ⚠ | SLT66DT14C | Power Source |
| T1 (Other areas) ⚠ | SLT66DTE13E | Power Source |
| **FUSES** | | |
| F1 (MC) ⚠ | XBA1F12NU14 | 125V,1.2A |
| F1 Except for (M,MC) ⚠ | XBA2C025T1A | 250V,T250mA |
| F2 Except for (M,MC) ⚠ | XBA2C10TR0 | 250V,T1A |

LAMP

Fader.

Shell holds circuits

| Ref. No. |
|---|
| CHABIN |
| 1 |
| 2 |
| 3 |
| 4 |
| 5 |
| 6 |
| 7 |
| 8 |
| 10 |
| 10 |
| 11 |
| 12 |
| 13 |
| 14 |
| 15 |
| 16 |
| 17 |
| 18 |
| 19 |
| 20 |
| 21 |
| 22 |
| 23 |
| 24 |
| 25 |
| 26 |
| 27 |
| 28 |
| 29 |
| 30 |
| 31 |
| 32 |
| 33 |
| 34 |
| 35 (M,MC PE,I |
| 35 (EK) |
| 35 (Other areas) |
| 36 (M,MC PE,I |
| 36 (Other areas) |
| 37 (M,MC |
| 37 (EK) |
| 37 (XL) |
| 37 (PA,PE,I |
| 37 (Other ar |
| 38 |
| 39 |
| 41 |
| 42 |
| 42 |
| 43 |
| 44 |
| 45 |
| 46 |
| 48 |
| 48-1 |
| 49 |
| 50 |
| 51 |

# SL-1200MK2/1210MK2

| Ref. No. | Part No. | Description | |
|---|---|---|---|
| **CHABINET AND CHASSIS PARTS** | | | |
| 1 | SFAD122-01A | Dust Cover | (1) |
| 2 | SFTG172-01 | Turntable Mat | (1) |
| 3 | SFTE172-01 | Turntable Platter Ass'y | (1) |
| 4 | SFUM172-05 | Cover, Cabinet | (1) |
| 5 | SFMGQ20-01 | Cover, Drive Coil | (1) |
| 6 | SFMGS20-31A | Drive Coil Ass'y | (1) |
| 7 | SFMZ172-01E | FG Coil Ass'y | (1) |
| 8 | SFMZQ20-01A | Shaft Ass'y, Turntable | (1) |
| 10 ○ | SFAC122-01 | Cabinet (Silver) | |
| 10 ® | SFAC124S01 | Cabinet (Black) | (1) |
| 11 | SFUM172-04 | Ornament, Stylus Illuminator | (1) |
| 12 | SFKT122-01 | Knob, Power Switch | (1) |
| 13 | SFKK122-01E | Case, Strobe Illuminator | (1) |
| 14 | SFKT015-06 | Button, Start/Stop | (1) |
| 15 | SFQA122-01 | Spring, Start/Stop Button | (1) |
| 16 | SFUM122-01 | Base, Operation | (1) |
| 17 | SFKT015-01E | Button, Speed 33 | (1) |
| 18 | SFDJ122-02E | Connector, 7pin | (1) |
| 19 | SFGZ122-01 | Spacer, Rubber | (1) |
| 20 | SFYB-5-32 | Ball, Switch Cam | (1) |
| 21 | SFQA520-01 | Spring, Switch Cam | (1) |
| 22 | SFUM122-03 | Cam, Power Switch | (1) |
| 23 | SFUM015-11 | Spacer, Speed Indicator | (2) |
| 24 | SFKK172-01 | Cover,Stylus Illuminator | (1) |
| 25 | SFXB122-06 | Boss, Drive | (1) |
| 26 | SFQA172-01 | Spring, Drive Boss | (1) |
| 27 | SFXJ172-01 | Pin, Lock Canceler | (1) |
| 28 | SFUP122-02E | Bracket, Stylus Illuminator | (1) |
| 29 | SFUP122-03 | Plate, Lock Operation | (1) |
| 30 | SFDJ122-03E | Connector, 3pin | (1) |
| 31 | SFX0172-01 | Pin, Guide | (1) |
| 32 | SFQA520-01 | Spring, Lock Canceler | (1) |
| 33 | SFQA122-02 | Spring, Lock Operation Plate | (1) |
| 34 | SFXJ172-05 | Pin, Lock Operation Plate | (1) |
| 35 [M,MC,PA PE,PC] | SFHK040L | Clamper, AC Cord | (1) |
| 35 [EK] | SFSR-5N-4 | Clamper, AC Cord | (1) |
| 35 [Other areas] | SFSR-4N-4 | Clamper, AC Cord | (1) |
| 36 [M,MC,PA PE,PC] | SFUP122-16 | Bracket, AC Cord | (1) |
| 36 [Other areas] | SFUP122X01 | Bracket, AC Cord | (1) |
| 37 △⑤ [M,MC] | RJA9Y | AC Cord | (1) |
| 37 [EK] △⑤ | QFC1205M | AC Cord | (1) |
| 37 [XL] △⑤ | SJAG23 | AC Cord | (1) |
| 37 △⑤ [PA,PE,PC] | SJA83 | AC Cord | (1) |
| 37 △⑤ [Other areas] | SJA88 | AC Cord | (1) |
| 38 | SFGC122-03 | Rubber, Power Transformer | (2) |
| 39 | SFGC122-01 | Cushion, Power Transformer | (3) |
| 41 | SFKT122-02 | Knob, Pitch Control | (1) |
| 42 ○ | SFKK122-03 | Ornament (Silver), Pitch Control | (1) |
| 42 ® | SFKK124S01 | Ornament (Black), Pitch Control | (1) |
| 43 | SFUZ122-01 | Felt | (1) |
| 44 | SFUP122-09 | Holder, LED | (1) |
| 45 | SFUP122-01 | Bracket, Pitch Control | (1) |
| 46 | SFDJ122-01E | Connector, 4pin | (1) |
| 48 | SFAU122-02 | Bottom Base | (1) |
| 48-1 | SFAU122-03 | Bottom Cover | (1) |
| 49 | SFUP122-23 | Supporter (A),Hinge | (2) |
| 50 | SFUP122-24 | Supporter (B), Hinge | (2) |
| 51 | SFUMM02N04 | Case, Hinge | (2) |

| Ref. No. | Part No. | Description | |
|---|---|---|---|
| 52 | SFGC122-02E | Insulator | (4) |
| 54 | SFKT015-02E | Button, Speed 45 | (1) |
| 55 [M] ○ | SFNN122M10 | Name Plate | (1) |
| 55 [MC] ○ | SFNN122C10 | Name Plate | (1) |
| 55 [E] ○ | SFNN122S10 | Name Plate | (1) |
| 55 [EK,XL] ○ | SFNN122G10 | Name Plate | (1) |
| 55 [XA] ○ | SFNN122X10 | Name Plate | (1) |
| 55 [PA,PE] ○ | SFNN122P10 | Name Plate | (1) |
| 55 [PC] ○ | SFNN122P11 | Name Plate | (1) |
| 55 [Other areas] ○ | SFNN122N10 | Name Plate | (1) |
| 55 [E] ® | SFNN124S10 | Name Plate | (1) |
| 55 [EG,EH] ® | SFNN124Q10 | Name Plate | (1) |
| 58 | SFATM02N01A | Hinge | (2) |
| 59 | SFUP122-25 | Plate,Power transformer | (1) |
| **TONEARM PARTS** | | | |
| 61 | SFPCC31001K | Headshell | (1) |
| 62 ○ | SFPAM18201K | Tonearm Ass'y (Silver) | (1) |
| 62 ® | SFPAM18202K | Tonearm Ass'y (Black) | (1) |
| 63 | SFPWG17201K | Balance Weight | (1) |
| 64 | SFPRT18201K | Lift Ass'y | (1) |
| 65 | SFPZB17202 | Knob, Arm Base Lock | (1) |
| 66 | SFQA829-03 | Spring, Lift Ass'y | (1) |
| 67 | SFPAB13202 | Knob, Arm Lift | (1) |
| 68 | SFPJL18202K | Oil Damper | (1) |
| 70 | SFPZB12203 | Plate, Arm Base Cover | (1) |
| 71 | SFUM170-06 | Spacer, Phono Cord | (1) |
| 72 | SEPZB12204 | Clamper, Phono Cord | (1) |
| 73 | SFPAB18201K | Tonearm Fixing Plate | (1) |
| 74 | SFPZB12201K | Plate | (1) |
| 75 | SFDH122-05 | Phono Cord | (1) |
| 76 | SFEL028-01E | Ground Wire | (1) |
| 77 | SFPRT17201K | Arm Rest | (1) |
| 78 ○ | SFPKD17203 | Arm Base (Silver) | (1) |
| 78 ® | SFPKD17205 | Arm Base (Black) | (1) |
| 79 | SFPKB17204E | Ring,Arm Base Operation | (1) |
| 80 | SFPKD12201 | Bracket, Arm Base | (1) |
| 81 | SFPAB17206 | Knob, Anti-Skating | (1) |
| 82 ○ | SFGK132-01 | Cap (Silver) | (1) |
| 82 ® | SFGK133S01 | Cap (Black) | (1) |
| **SCREW,NUT AND WASHERS** | | | |
| N1 ⑤ | XTN3+8BFZ | Screw | (5) |
| N2 | SFXGQ20-02 | Screw | (3) |
| N3 ⑤ | XTN3+8B | Screw | (8) |
| N4 ⑤ | XWG3 | Washer | (10) |
| N5 ⑤ | XTN26+6B | Screw | (3) |
| N6 ⑤ | XTV3+8BFN | Screw | (8) |
| N7 | SFXG172-01 | Screw | (3) |
| N8 | XTN3+5J | Screw | (2) |
| N9 | SFXW172-03 | Washer | (1) |
| N10 | SFPEW11003 | Washer | (6) |
| N11 ⑤ | XWE3E10 | Washer | (3) |
| N12 ⑤ | XWA3B | Washer | (8) |
| N13 ⑤ | XSN3+10S | Screw | (3) |
| N14 | SFXW910J02 | Washer | (1) |
| N15 ⑤ | XTN3+10B | Screw | (5) |
| N16 ⑤ | XTN2+10B | Screw | (1) |
| N17 ⑤ | XUC3FT | Circlip | (2) |
| N18 | XSN17+3FY | Screw | (1) |
| N19 ⑤ | XUC2FT | Circlip | (1) |
| N20 ⑤ | XUC25FT | Circlip | (1) |
| N21 ⑤ | XSN3+14S | Screw | (1) |
| N22 | RTW-12 | Circlip | (1) |
| N23 ⑤ | XSN2+10 | Screw | (2) |
| N24 ⑤ | XSN3+6S | Screw | (2) |
| N25 ⑤ | XTN3+6B | Screw | (5) |
| N26 | XTWS3+14TFZ | Screw | (6) |
| N27 | SFXG122-02 | Screw | (1) |
| N29 | SFXG122-01 | Screw | (4) |
| N30 | XTN3+14QFZ | Screw | (6) |

| Ref. No. | Part No. | Description | |
|---|---|---|---|
| N31 ⑤ | XWG3FZ | Washer | (6) |
| N32 ⑤ | XSN3+14BVS | Screw | (4) |
| N33 ⑤ | XWA3BFZ | Washer | (4) |
| N34 | SFXG829-1 | Screw | (1) |
| N35 ⑤ | XSN3+8S | Screw | (2) |
| N36 ⑤ | XUC5FT | Circlip | (1) |
| N37 | SFPEV17202 | Screw | (3) |
| N38 ⑤ | XTN3+25B | Screw | (1) |
| N39 | SFPEW1100 | Washer | (1) |
| N40 ⑤ | XSN3+6BVS | Screw | (4) |
| N41 ⑤ | XWC3BFZ | Washer | (1) |
| N42 ⑤ | XSN3+12BVS | Screw | (2) |
| N43 ⑤ | XWG3FZ | Washer | (2) |
| N44 | SFXW701-02 | Washer | (1) |
| N45 | SFPEW00705 | Washer | (4) |
| N46 | XTW26+5E | Screw | (1) |
| **ACCESSORIES** | | | |
| A1 [M] | SFNU122M06 | Instruction Book | (1) |
| A1 [MC] | SFNU122C06 | Instruction Book | (1) |
| A1 [E,EB,EC] | SFNU122S01 | Instruction Book | (1) |
| A1 [EK] | SFNU122G01 | Instruction Book | (1) |
| A1 [PA, PE,PC] | SFNU122P01 | Instruction Book | (1) |
| A1 [Other areas] | SFNU122X01 | Instruction Book | (1) |
| A2 | SFWE010 | 45 Adaptor | (1) |
| A3 | SFPEN3302 | Nut,Cartridge | (2) |
| A4 | SFPEW9601 | Washer,Cartridge | (2) |
| A5 | SFCZV8801 | Screw,Cartridge | (2) |
| A6 | SFPEV9801 | Screw,Cartridge | (2) |
| A7 | SFK0135-01 | Overhang Gauge | (1) |
| A8 | SFPZB3501 | Shell Weight | (1) |
| A9 △ [XA] Only | SFDKI19118 | 2pin Plug | (1) |
| A10 | SFPWG17202 | Sub-weight | (1) |
| A11 △ [PA,PE, PC] Only | QJP0603S | Adaptor, Gimens | |
| **PACKING PARTS** | | | |
| P1 [MC, EF] ○ | SFHP122C02 | Carton Box (Silver) | (1) |
| P1 [Other areas] ○ | SFHP122M02 | Carton Box (Silver) | (1) |
| P1 ® | SFHP124S02 | Carton Box (Black) | (1) |
| P2 | SFHH122-01 | Pad, Front | (1) |
| P3 | SFHH122-02 | Pad, Rear | (1) |
| P4 | SFHD122N05 | Pad, Top | (1) |
| P5 | SFHD122-02 | Pad (A), Turntable | (1) |
| P6 | SFHD122N06 | Pad (B), Turntable | (1) |
| P7 | SFYH60X60 | Polyethylene Bag, Unit& Dust Cover | (2) |
| P8 | SFYH40X45 | Polyethylene Bag, Turntable | (1) |
| P9 | SPB1083 | Polyethylene Bag, Accessories | (3) |
| P10 | SPJ15 | Polyethylene Bag, Shell Weight | (1) |
| P11 | SFHZD03M01 | Cover Sheet, Dust Cover | (1) |
| P12 | SFHZ122-01 | Cover Sheet, 45Adaptor | (1) |
| P13 | SPP189 | Cover Sheet, Cords | (2) |

## ■ EXPLODED VIEWS

- Cabinet and Chassis Parts

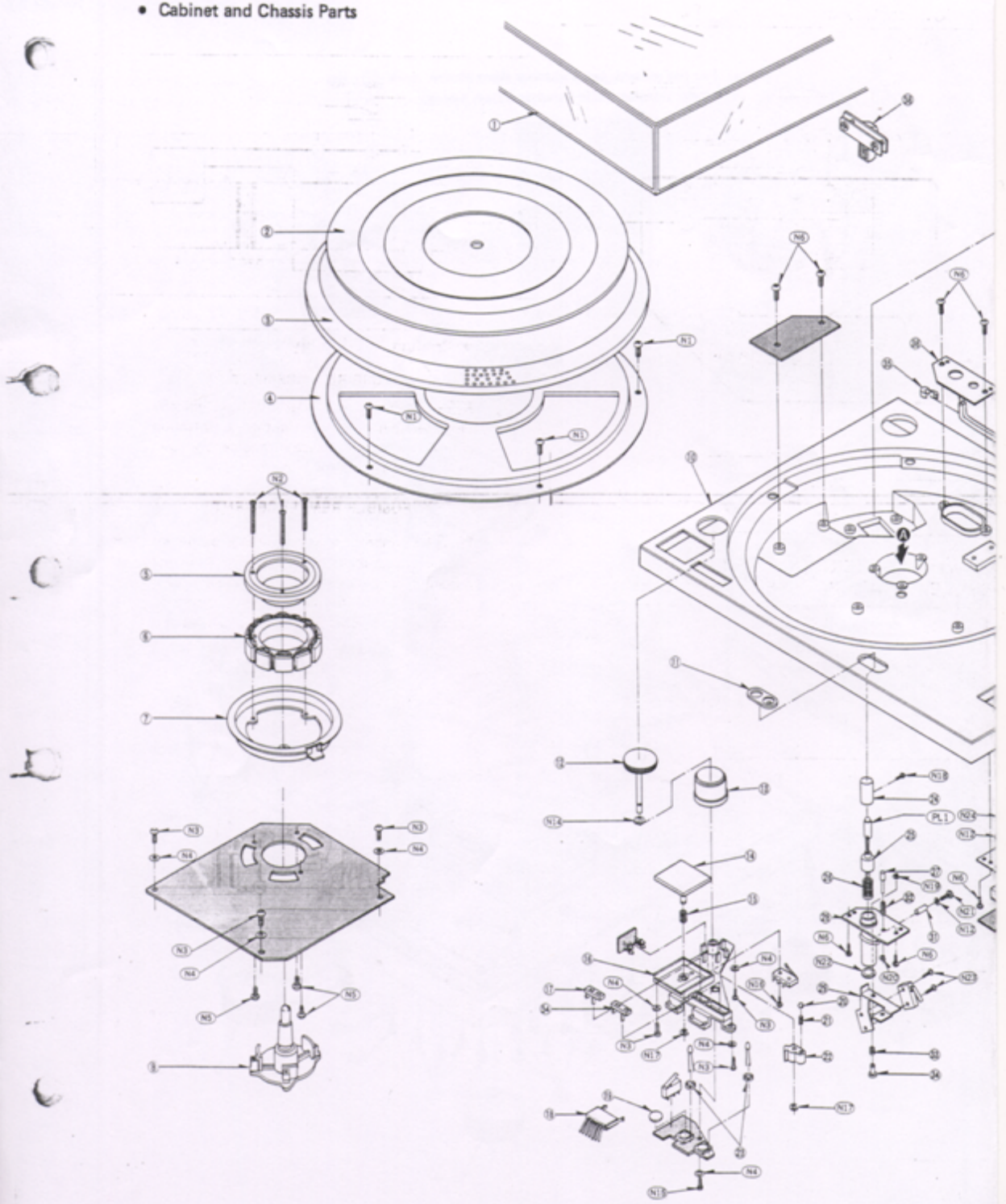

Note: For the set with serial number sheet change mark [E], the power transformer is fitted as shown below.

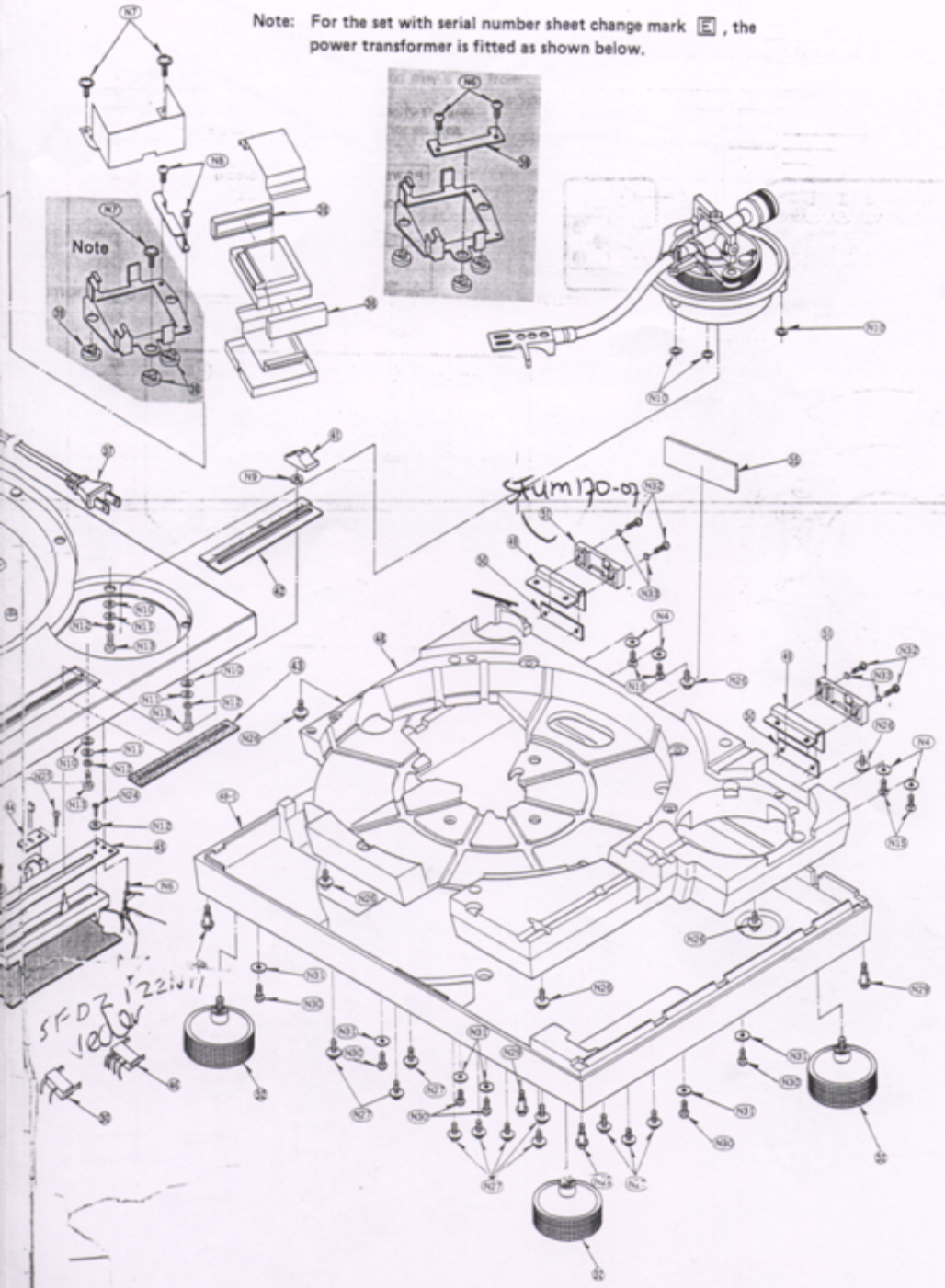


Tonearm P

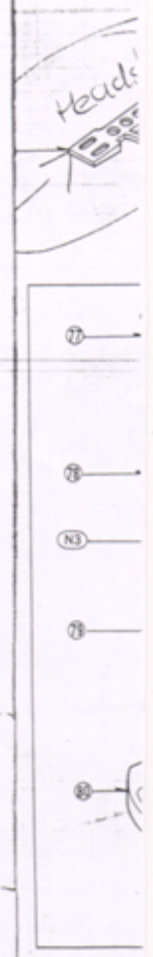

■ E

• Tonearm Parts

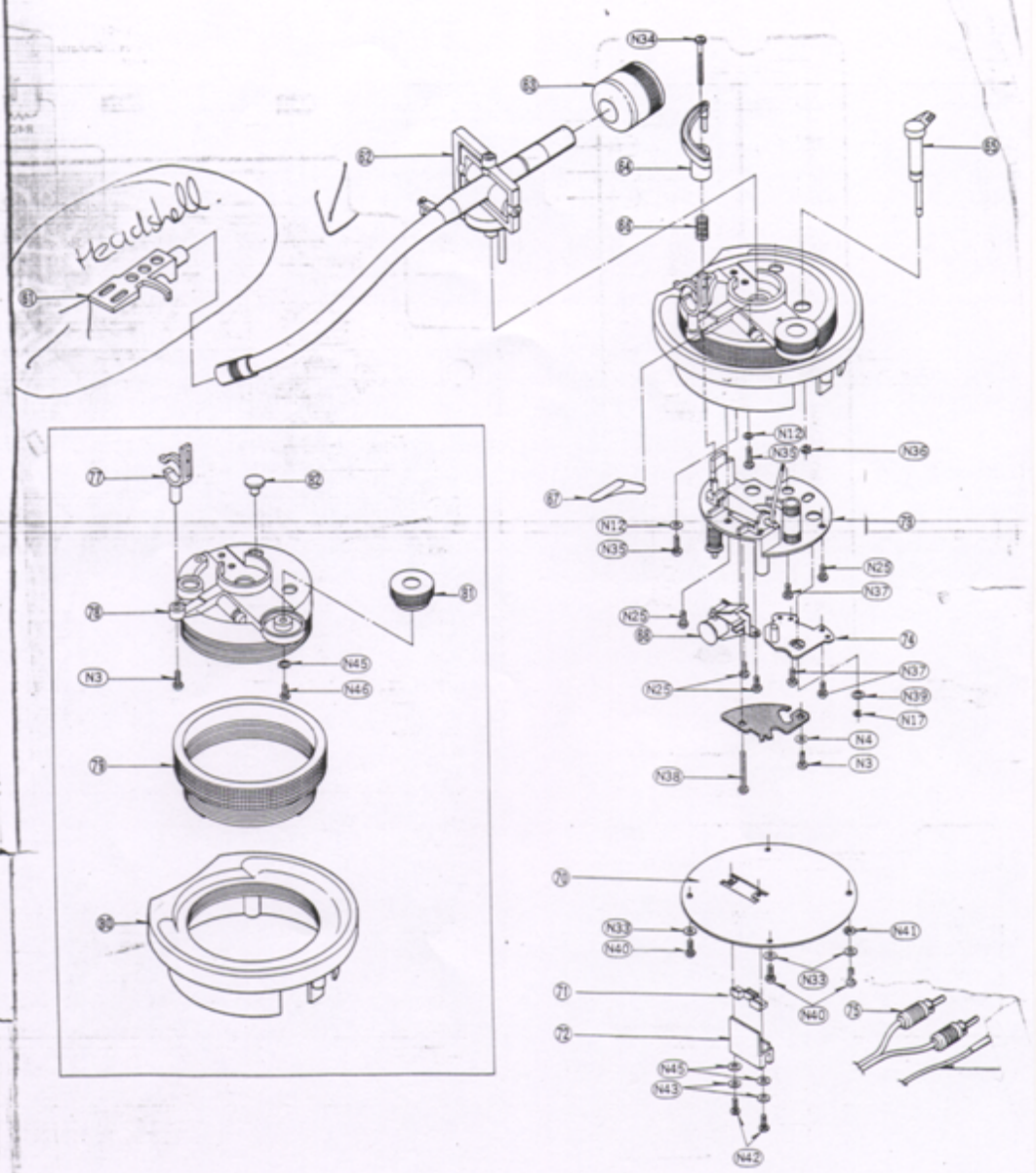

# 1200MK2/1210MK2

RSGN.

## CIRCUIT BOARD AND WIRING CONNECTION DIAGRAM

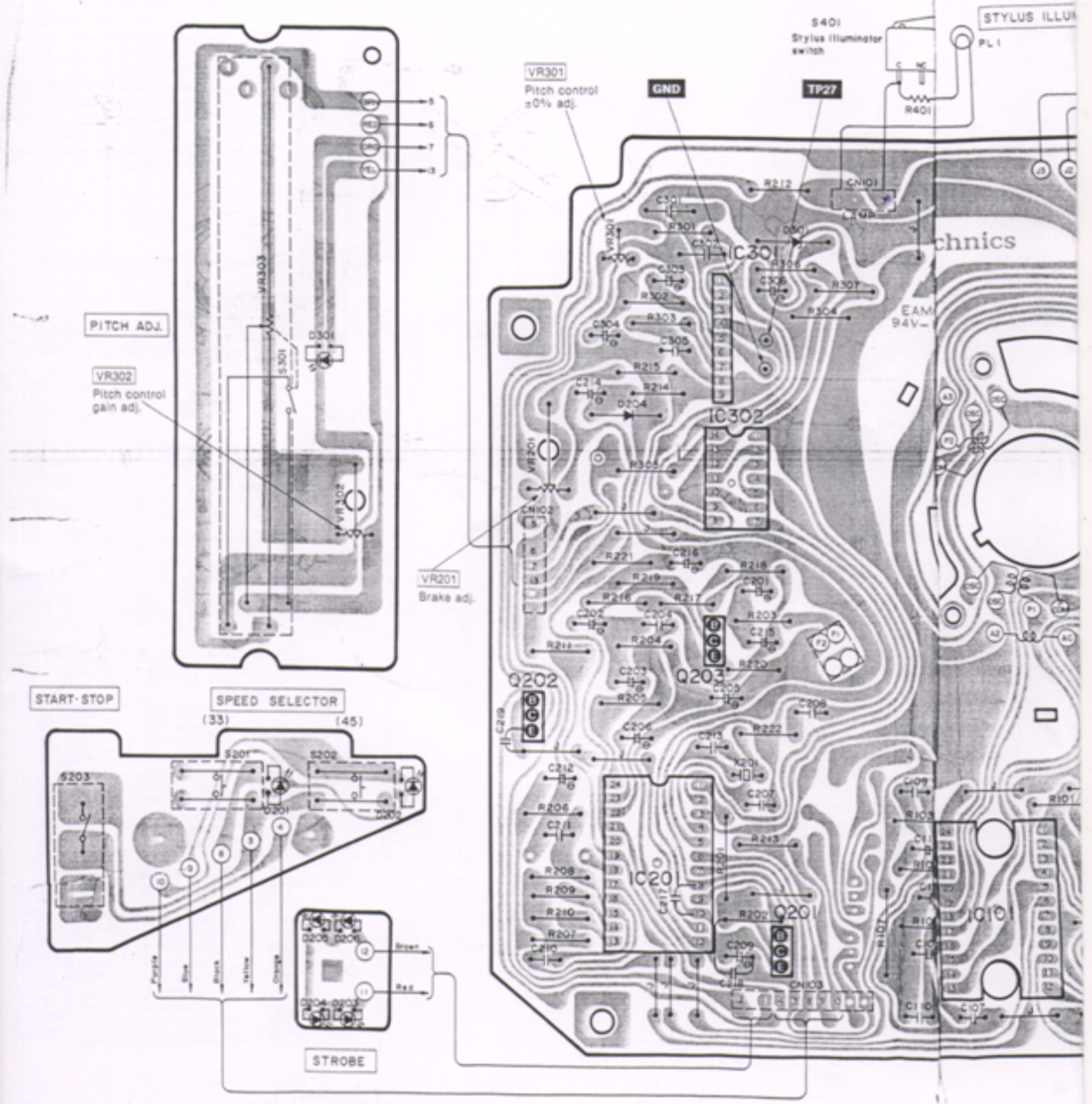

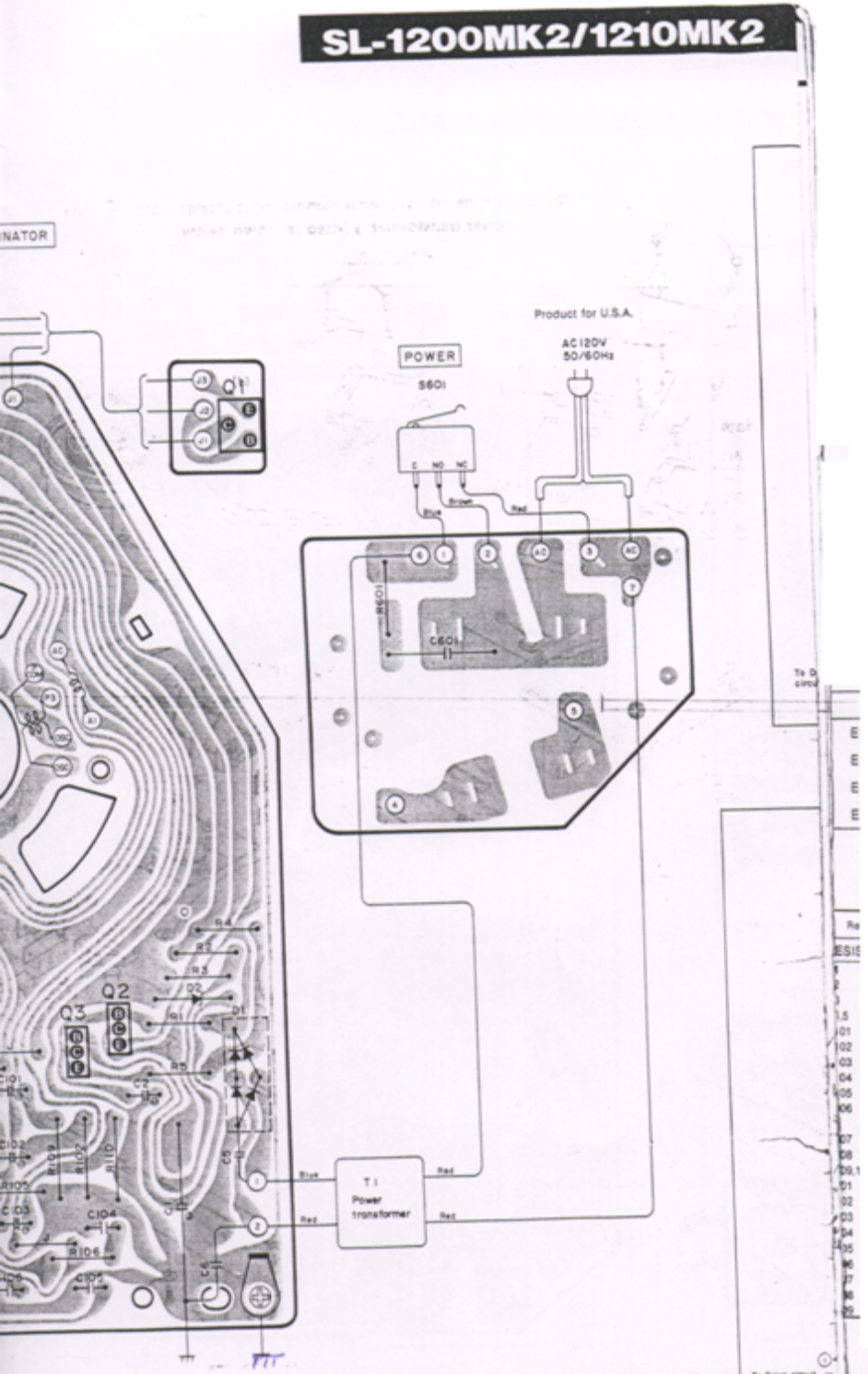
NATOR
Product for U.S.A.
AC 120V
50/60Hz
POWER
S601
C
NO
NC
Blue
Brown
Red
R601
C601
Q1
Q2
Q3
R4
R7
R3
D2
D1
R5
C5
C4
C104
R106
C102
R107
R110
Blue
Red
T1
Power
transformer
Red
Red
To Drive circuit board

# SL-1200MK2/1210MK2

- Power source circuit

  * Product for Canada

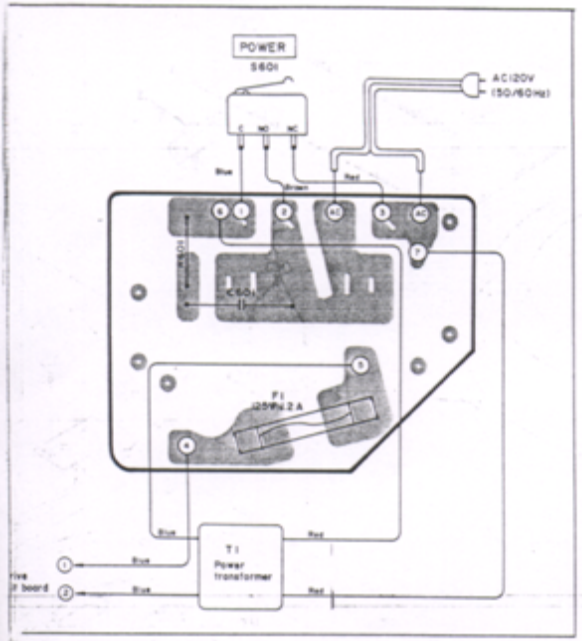


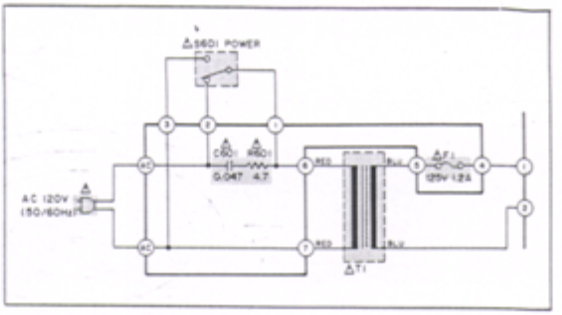


- Product for MC only

**FUSE REPLACEMENT**

Symbol located near the fuse indicates fast operating type. For continued protection against fire hazard, replace with same type fuse. Refer to the symbol for fuse rating.

**FUSIBLE REMPLACEMENT**

Le symbole qui se trouve près du fusible singifie un fusible à action rapide. Pour une protection contiue contre les risques d'incendie, n'utiliser que des fusibles du même type. Se rapporter au symbole pour la valeur des fusibles.

* Product for [E], [EK], [XL], [EG], [EB], [EH] [EF], [Ei], [XA], [PA], [PE] and [PC] areas

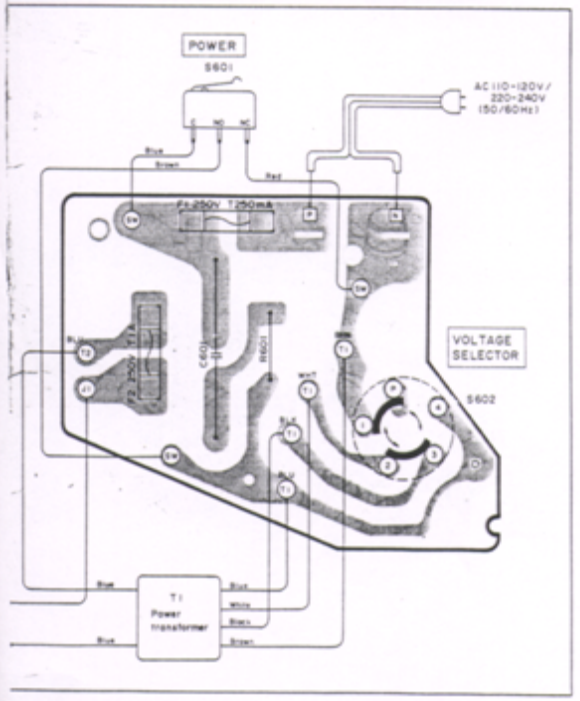


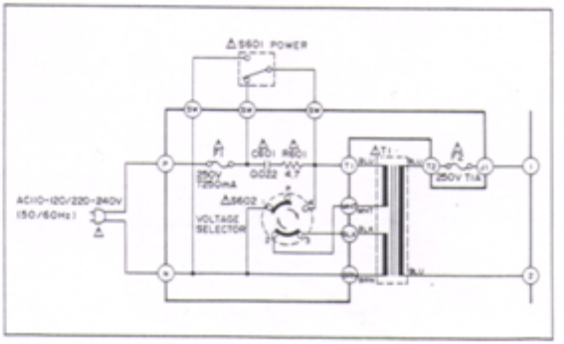

# ■ SCHEMATIC DIAGRAM

(This schematic diagram may be modified at any time with the development of new technology.)

**Notes:**

1. **S201, 202** : Speed selector switch.
2. **S203** : Start/stop switch.
3. **S301** : Pitch control reset switch in "**off**" position.
4. **S401** : Stylus illuminator switch in "**off**" position.
5. **S601** : Power switch in "**on**" position.
6. **S602** : Voltage selector in "**220 – 240**" position.
7. The voltage value, and waveforms are the reference voltage values of this unit measured by DC electronic voltmeter (high-impedance) and oscilloscope on the basis of chassis. Therefore, the voltage value and waveform may include some error due to the internal impedance of the tester or the measuring set.
   * [ ] is the voltage when turntable is in stop.
   * ( ) is the voltage when turntable is in rotation. (at 33 rpm)
8. ——— +B voltage lines.
9. Important safety notice.
   Components identified by ⚠ mark have special characteristics important for safety. When replacing any of these components, use only manufacturer's specified parts.
10. The part No. of diodes mentioned in the schematic diagram stand for production part No. Regarding the part No. with ✪ mark the production part No. are different from the replacement part No. Therefore, when placing an order for replacement part, please use the part No. in the replacement parts list.

**IMPORTANT SAFETY NOTICE**

The shaded area on this schematic diagram incorporates special features important for protection from fire and electrical shock hazards.
When servicing it is essential that only manufacturer's specified parts be used for the critical components in the shaded areas of the schematic.

- **Terminal guide of transistors, diodes and IC's**

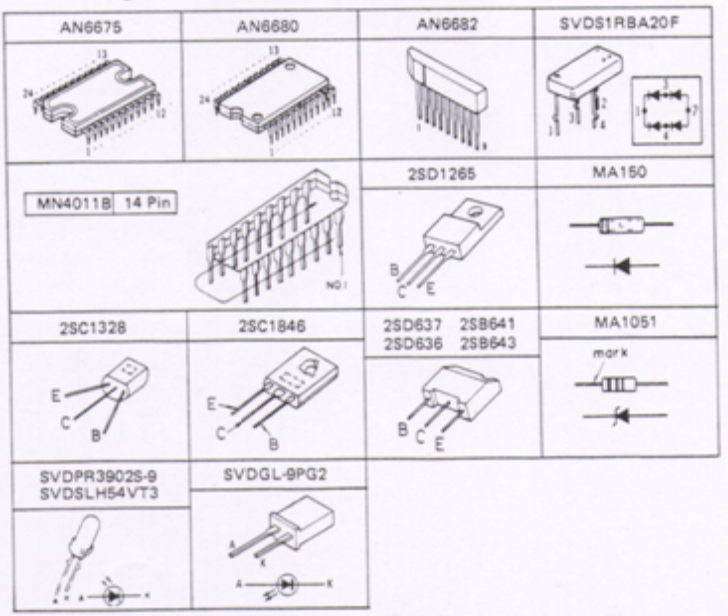

## ■ PACKING

1. Plase the unit (with cushions attached) as illustrated.
2. Fold the flaps according to the line marks.
3. Seal the top with adhesive tape.
   * Use gum tape or adhesive cloth tape of 50mm wide at least
4. For the edges, first fold the flap "a" and then flap "b", and staple. Remember to staple only flap "b". (Use 15 or 16mm staple)

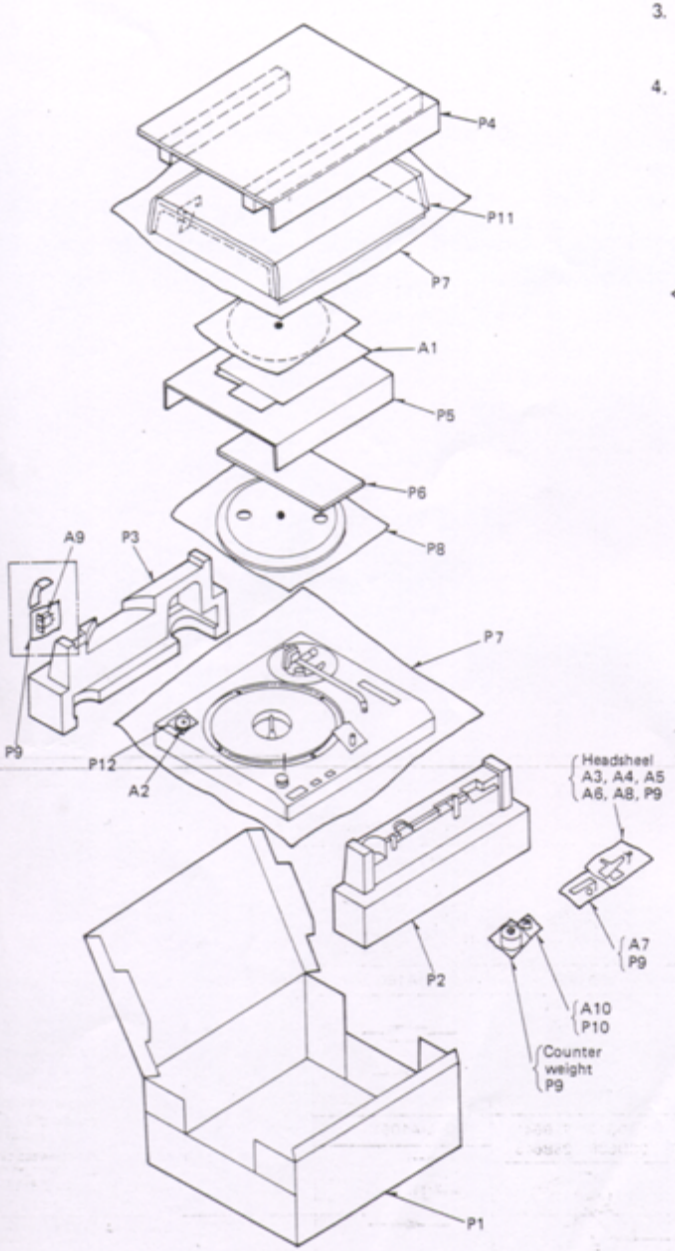


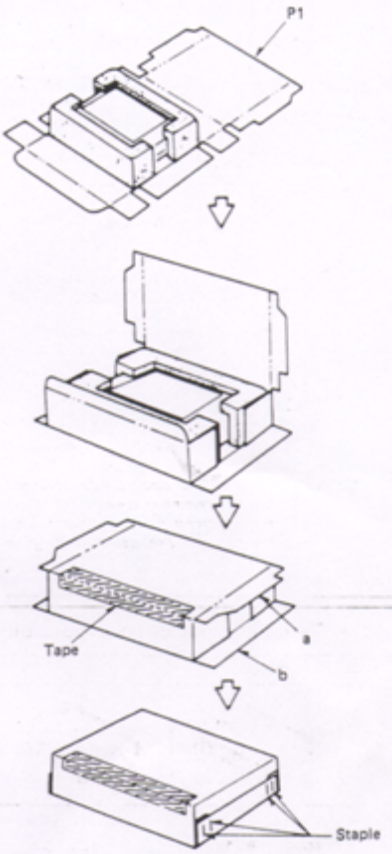


* Stapling positions are shown below.

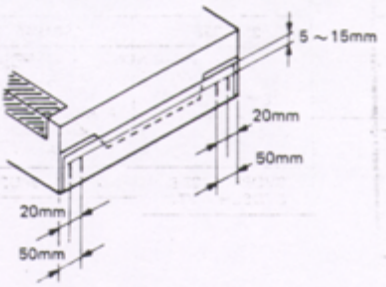


Printed in Japan
840412450 Ⓗ T.K.

ORDER NO. SD7909-1622

# Service Manual

SL-1200MK2

Turntable System

## SL-1200MK2

(XG), (XA), (XGB)
(XAL), (E)

* The model SL-1200MK2 (XG) is available in European only.
* The model SL-1200MK2 (XA) is available in Asia, Latin America, Middle East and Africa only.
* The model SL-1200MK2 (XGB) is available in Belgium only.
* The model SL-1200MK2 (XAL) is available in Australia only.
* The model SL-1200MK2 (E) is available in Scandinavia only.

Technics

**Matsushita Electric Trading Co., Ltd.**
P.O. Box 288, Central Osaka Japan

## SPECIFICATIONS

(Specifications subject to change without notice. Weight and dimensions shown are approximate.)

### General

| | |
|---|---|
| **Power supply:** | ~110–120/220–240, 50 or 60 Hz |
| **Power consumption:** | 13.5 W |
| **Dimensions:** | 45.3 x 16.2 x 36 cm |
| **(W x H x D)** | (17-27/32" x 6-19/64" x 14-11/64") |
| **Weight:** | 12.5 kg (27.6 lb) |

### Turntable section

| | |
|---|---|
| **Type:** | Quartz direct drive<br>Manual turntable |
| **Drive method:** | Direct drive |
| **Motor:** | Brushless DC motor |
| **Turntable platter:** | Aluminum diecast<br>Diameter 33.2 cm (13-5/64")<br>Weight 2 kg (4.4 lb) |
| **Turntable speeds:** | 33-1/3 rpm and 45 rpm |
| **Starting torque:** | 1.5 kg.cm (1.3 lb .in) |
| **Build-up characteristics:** | 0.7 s. from standstill to 33-1/3 rpm |
| **Braking system:** | Electronic brake |
| **Wow and flutter:** | 0.01% WRMS*<br>0.025% WRMS (JIS C5521)<br>±0.035% peak (IEC 98A Weighted) |

* This rating refers to turntable assembly alone, excluding effects of record, cartridge or tonearm, but including platter. Measured by obtaining signal from built-in frequency generator of motor assembly.

| | |
|---|---|
| **Rumble:** | –56 dB (IEC 98A Unweighted)<br>–78 dB (IEC 98A Weighted) |

### Tonearm section

| | |
|---|---|
| **Type:** | Universal |
| **Effective length:** | 230 mm(9-1/16") |
| **Arm height adjustment range:** | 0–6 mm |
| **Overhang:** | 15 mm (19/32") |
| **Effective mass:** | 12 g (without cartridge) |
| **Offset angle:** | 22° |
| **Friction:** | Less than 7 mg (lateral, vertical) |
| **Tracking error angle:** | Within 2°32' (at the outer groove of 30 cm (12") record |
| **Stylus pressure** | Within 0°32' (at the inner groove of 30 cm (12") record |
| **adjustment range:** | 0–2.5 g |
| **Applicable cartridge weight range:** | 6–10 g<br>13.5–17.5 g (including headshell) |
| **(with auxiliary weight):** | 9.5–13 g<br>17–20.5 g (including headshell) |
| **(with shell weight)** | 3.5–6.5 g<br>11–14 g (including headshell) |
| **Headshell weight:** | 7.5 g |

### Cartridge section

| | |
|---|---|
| **Model No.** | EPC-207C |
| **Type:** | Moving magnet |
| **Frequency response:** | 20 Hz to 25 kHz<br>20 Hz to 15 kHz ±2 dB |
| **Output voltage:** | 3 mV at 1 kHz<br>5 cm/s. zero to peak lateral velocity<br>[8.5 mV at 1 kHz 10 cm/s. zero to peak 45° velocity (DIN 45500)] |
| **Channel separation:** | 25 dB at 1 kHz |
| **Channel balance:** | Within 2 dB at 1 kHz |
| **Compliance (dynamic):** | 10 x $10^6$ cm/dyne at 100Hz |
| **Stylus pressure:** | 1.75 ±0.25 g (17.5 ±2.5 mN) |
| **Load impedance:** | 47 kΩ to 100 kΩ |
| **Weight:** | 5.6 g (cartridge only) |
| **Replacement stylus:** | EPS-207ED<br>(Elliptical stylus) |

## ■ DISASSEMBLY PROCEDURE

### How to remove panel cover

1. Remove head shell and turntable.
2. Secure arm with arm clamp.
3. Remove 5 screws Ⓐ of the panel cover as shown in Fig. 1.

### How to remove stater frame coil and F.G detector coil

4. Remove 3 connectors Ⓑ and 2 read wires Ⓒ from power transformer as shown in Fig. 2.
5. Remove 3 screws Ⓓ of the drive circuit board and 3 screws Ⓔ of the stater frame cover as shown in Fig. 2.
6. Disconnect 18 soldered parts Ⓕ of the stater coil and 4 soldered parts Ⓖ of the F.G detector coil as show in Fig. 3.
7. Remove 3 screws Ⓗ of the stater frame ass'y as shown in Fig. 3.

### How to remove bottom base ass'y

8. Remove 4 audio insulators. **(Counterclockwise rotation)**
9. Remove 17 screws and spacer Ⓘ as show in Fig. 4.
10. Remove 11 screws Ⓙ as shown in Fig. 4.

### How to remove stylus-illuminator lamp

11. Remove 2 screws Ⓚ of the stylus-illuminator lamp ass'y as shown in Fig. 5.
12. Remove 1 screw Ⓛ as shown in Fig. 6.

### How to remove neon-illuminator L.E.D.

13. Remove 4 screws Ⓜ as shown in Fig. 5.
14. Remove 1 circlip Ⓝ and switch cam Ⓞ as shown in Fig. 5.
15. Remove strobo-illuminator case.

### How to remove tone arm

16. Remove 4 screws Ⓟ of the arm base cover as shown in Fig. 5.
17. Remove 2 screws Ⓠ of the phono cord clamper as shown in Fig. 5.
18. Remove phono cord clamper as shown in Fig. 7.
19. Remove 2 screws Ⓡ of the phono cord p.c.b. as shown in Fig. 8.
20. Remove 2 screws Ⓢ as shown in Fig. 8.
21. Remove 2 screws Ⓣ of the silicon oil dumper as shown in Fig. 8.
22. Remove 3 screws Ⓤ as shown in Fig. 8.
23. Remove 2 screws Ⓧ of the tone arm as shown in Fig. 9.

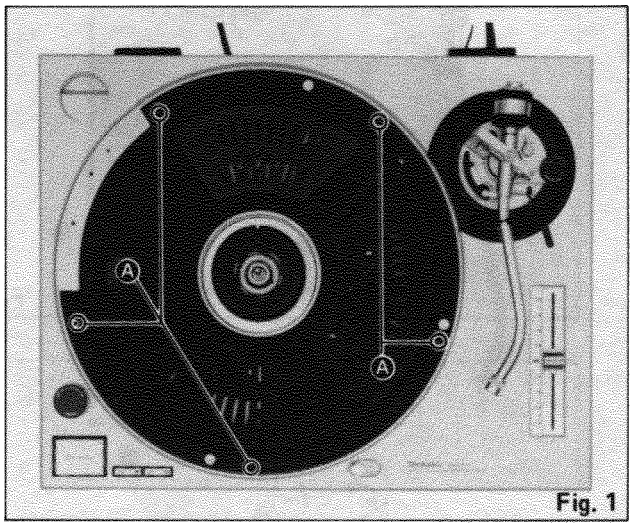

Fig. 1

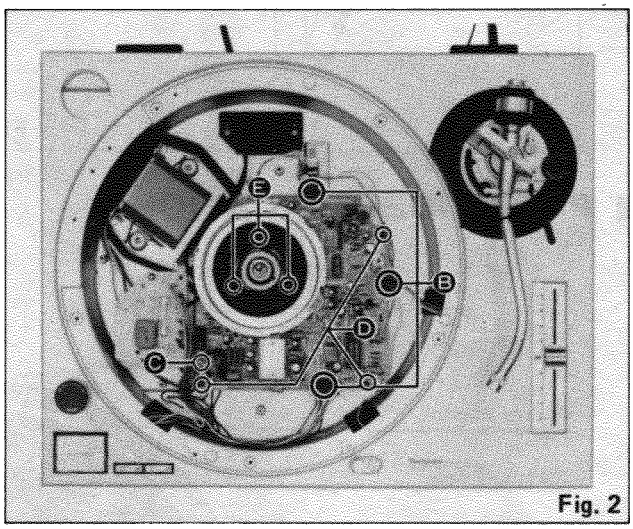

Fig. 2

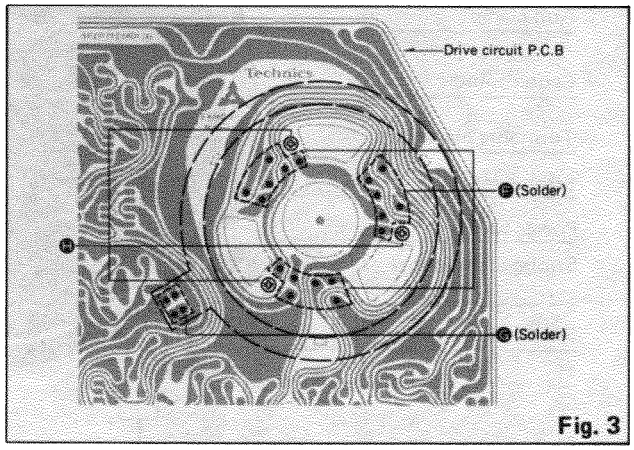

Fig. 3

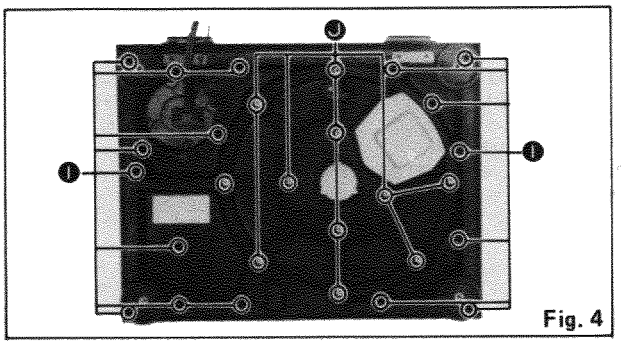

Fig. 4

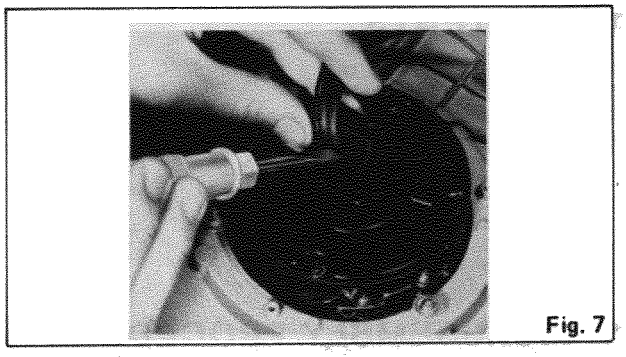
Fig. 7

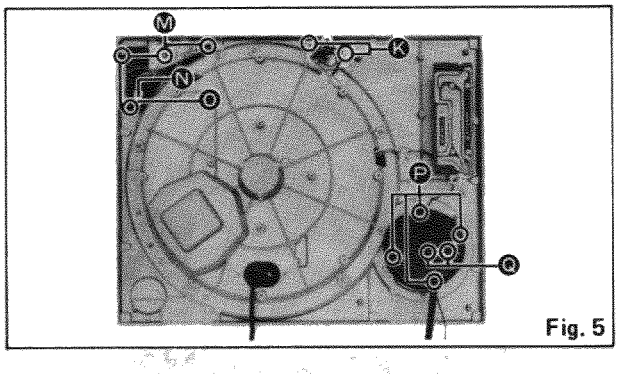

Fig. 5

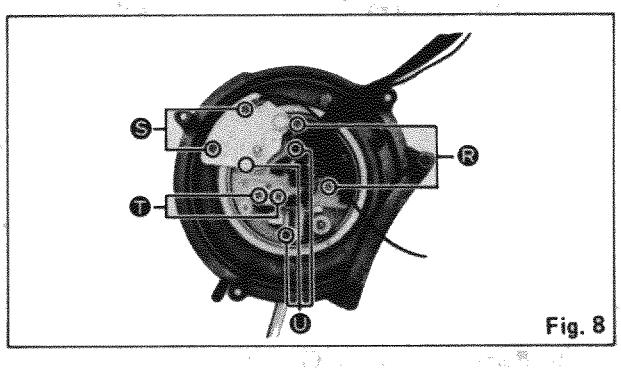

Fig. 8

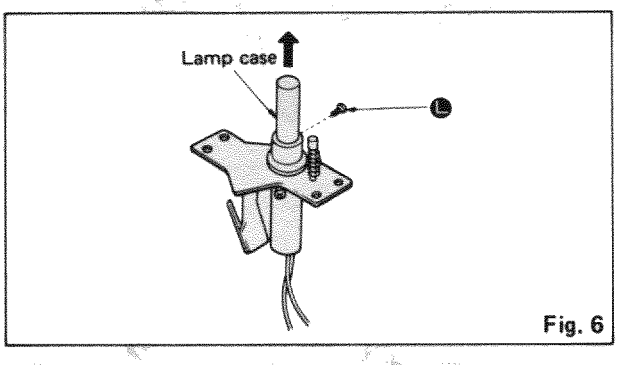

Fig. 6

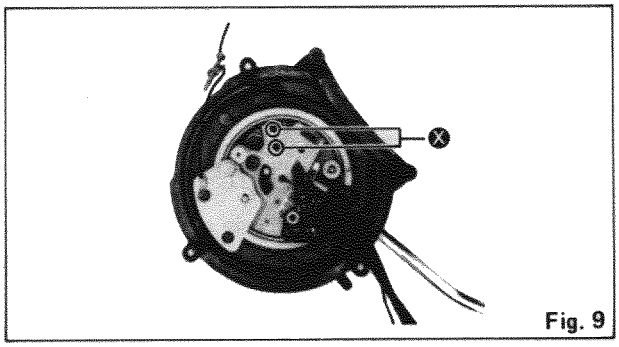

Fig. 9

## ■ PARTS IDENTIFICATION

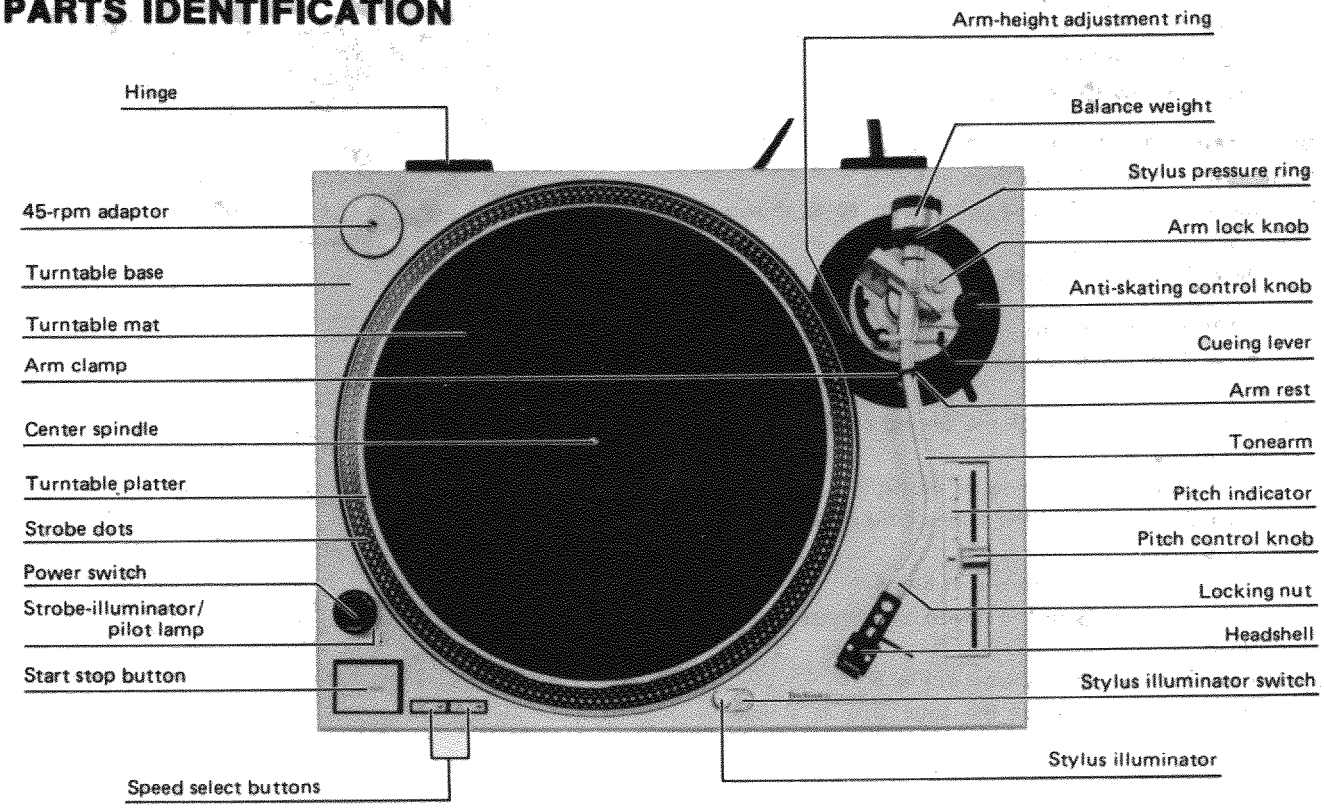

## ■ ARM BASE ASSEMBLING PROCEDURE

1. Attach the control ring to the arm base seat. (The control ring should be roated counterclockwise.)
2. Completely tighten the control ring, and then loosen it 1.5~2.5 turns to set the scale to "3". (See Fig. 11)

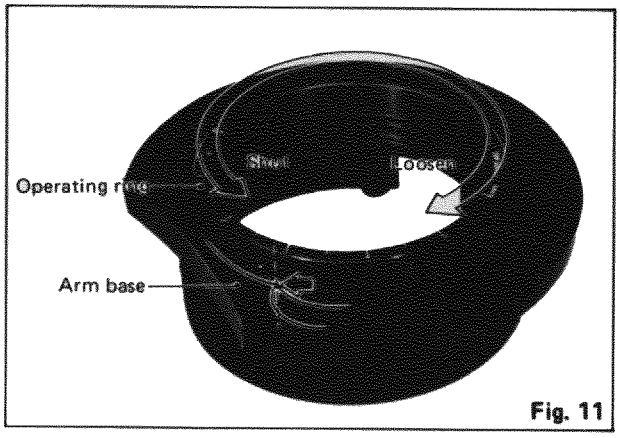

Fig. 11

3. Hold the arm base and set the red line mark on the arm base to the scale near "2", then turn the arm base clockwise. (See Fig. 12)
   **Note:**
   Take care not to allow deflection of the predetermined positions of the control ring and arm base seat.

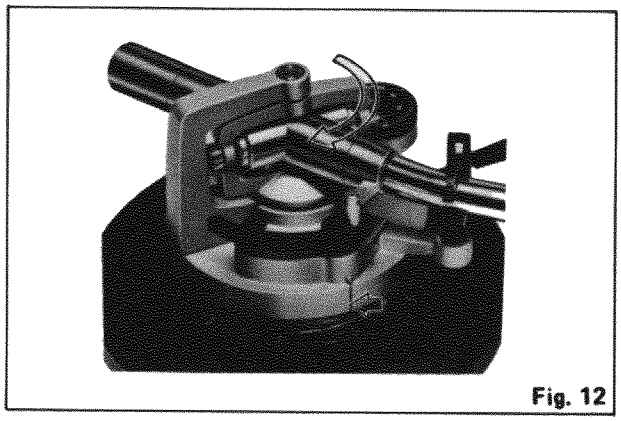
Fig. 12

4. Adjust the arm base so that the red line mark on the arm base is set to the scale "3" of the control ring. Next, secure the positioning base plate with two setscrews. (See Fig. 13)

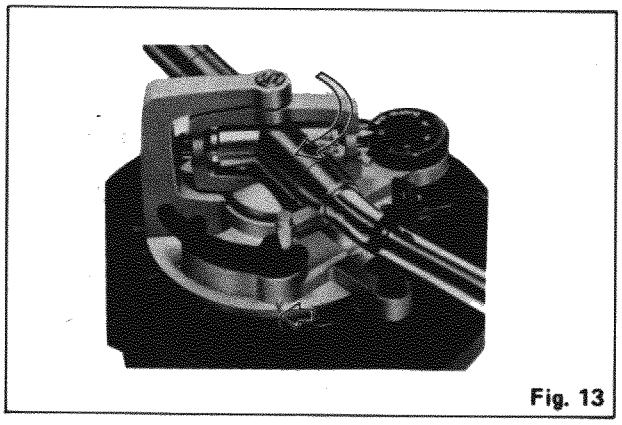
Fig. 13

5. Rotate the control ring and make sure that the arm base shifts within the range of 0~6mm. (See Figs. 14 and 15) If it does not shift within the specified range, the arm base position is deflected. In that case, disassemble the parts and check as specified in step 3.

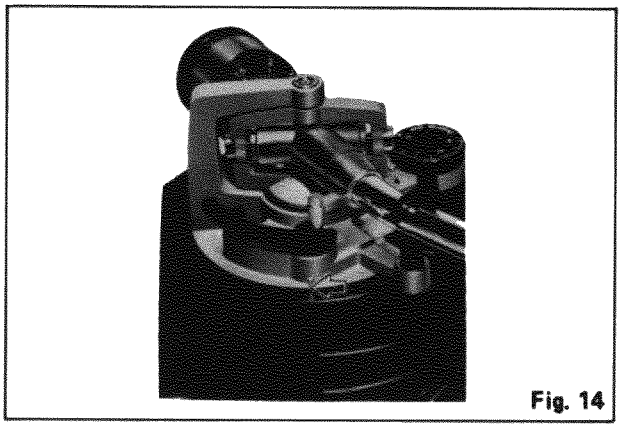
Fig. 14

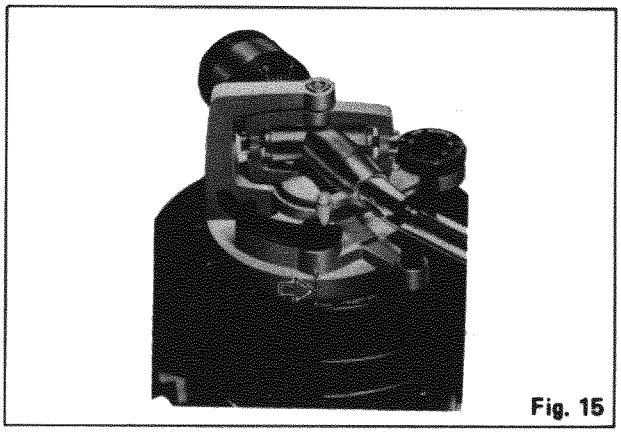
Fig. 15

## ■ ADJUSTMENT OF CANCELLER SPRING POSITION

If the arm body or PU base plate is replaced, be sure to set the canceller knob to "0.5" and make sure that the canceller spring is in contact with the arm shaft. (See Fig. 16) If the canceller spring is deflected, adjust it as follows:

1. Clamp the arm on the rest.
2. Set the canceller knob to "0.5".
3. Remove the PU base plate, adjust gear Ⓐ so that the canceller spring is in the position of Fig. 16.
4. Mount the PU base plate onto the arm base and check the spring position.

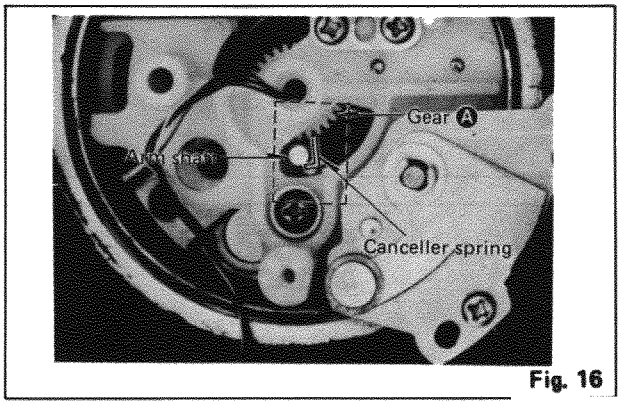

Fig. 16

## ■ ADJUSTMENTS

### Pitch control (fine adjustment of speed) (See Figs. 18 and 19.)

When the pitch control knob is located at the center of the position after turning on the power, the green LED indicator is lit showing the operating condition for the predetermined speed (either 33-1/3 or 45 rpm). The pitch control is variable in a range of about ±8%

Adjustment should be done on the basis of indicator scale. Figures on the indicator show approximate percentages for variable pitch control.

When the strobe dots in 4 stages marked at the peripheral edge of the turntable appear to be stationary, variation of individual pitches is shown. **(See Fig. 19.)**

**Note:**

The strobe-illumination of this unit employs a strobe-illuminator LED synchronized with the precise quartz frequency.

For fine adjustment of the turntable speed, be sure to effect the adjustment according to the LED illumination.

The LED illumination is not synchronized with fluorescent lamps.

### Adjustment of arm-lift height (See Figs. 20 and 21.)

The arm-lift height (distance between the stylus tip and record surface when cueing lever is raised) has been adjusted at the factory before shipping to approximately 8-13mm.

If the clearance becomes too narrow or too wide, turn the adjustment screw clockwise or counterclockwise, while pushing the arm lift down.

**Clockwise rotation**

—distance between the record and stylus tip is decreased.

**Counterclockwise rotation**

—distance between the record and stylus tip is increased.

**Note:**

As the adjusting screw has hexagonal head, be sure to make the adjustment while depressing the arm lift, or the screw will not move freely.

Also be sure that the hexagonal head retracts correctly into the arm lift when the latter is released.

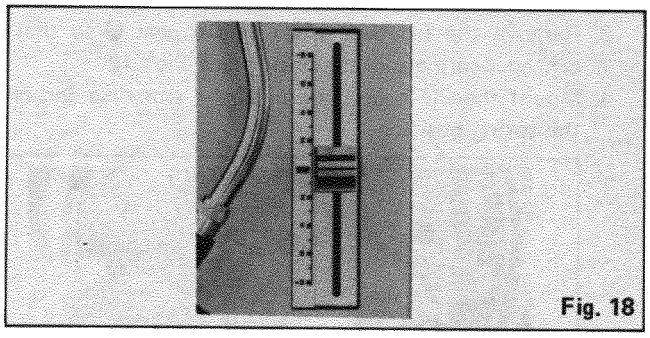

Fig. 18

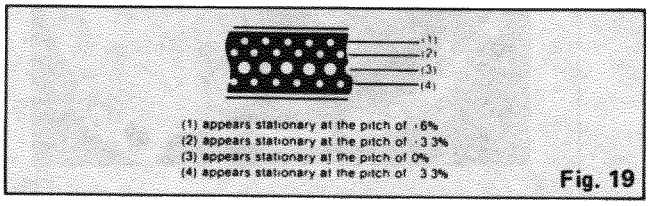


Fig. 19

### Adjustment of the tonearm height (See Fig. 22.)

The height of the tonearm can be adjusted up to 6 mm, and a scale is provided on the adjust ring in 0.5 mm increments. Be sure to set the proper arm height using the adjust ring scale and referring to the table.

| Height of cartridge (mm) (H) | Scale reading on the arm-height adjust ring |
|---|---|
| 15 | 0 |
| 16 | 1 |
| 17 | 2 |
| 18 | 3 |
| 19 | 4 |
| 20 | 5 |
| 21 | 6 |

For example, if the cartridge height is 17.5 mm, the arm-height adjust ring should be positioned at the intermediate location between 2 and 3 on the scale. **(See Fig. 22.)**

**Caution:**

Be sure to lock the tonearm by turning the arm lock knob in the direction indicated by the arrow after finishing the height adjustment for the tonearm.

**Lubrication (See Fig. 23.)**

Apply 2 or 3 drops of oil once after every 2000 hours of operation.

The time interval is much longer than that for conventional type motors (200-500 hours).

Please purchase original oil. **(Part number is SFWO 010.)**

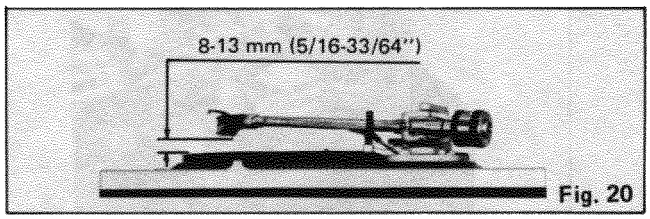


Fig. 20

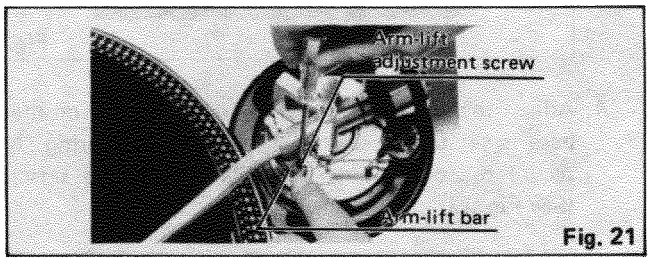


Fig. 21

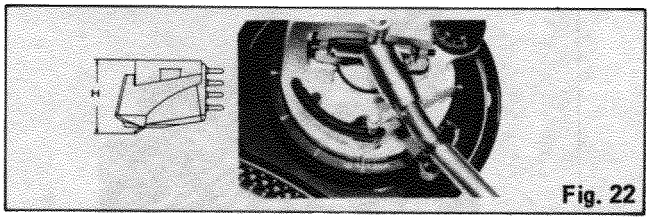


Fig. 22

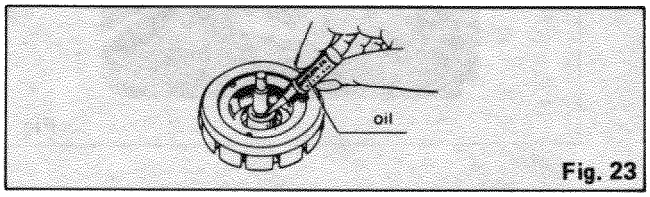


Fig. 23

# Schematic Diagram (This schematic diagram may be modified at any time with the develop

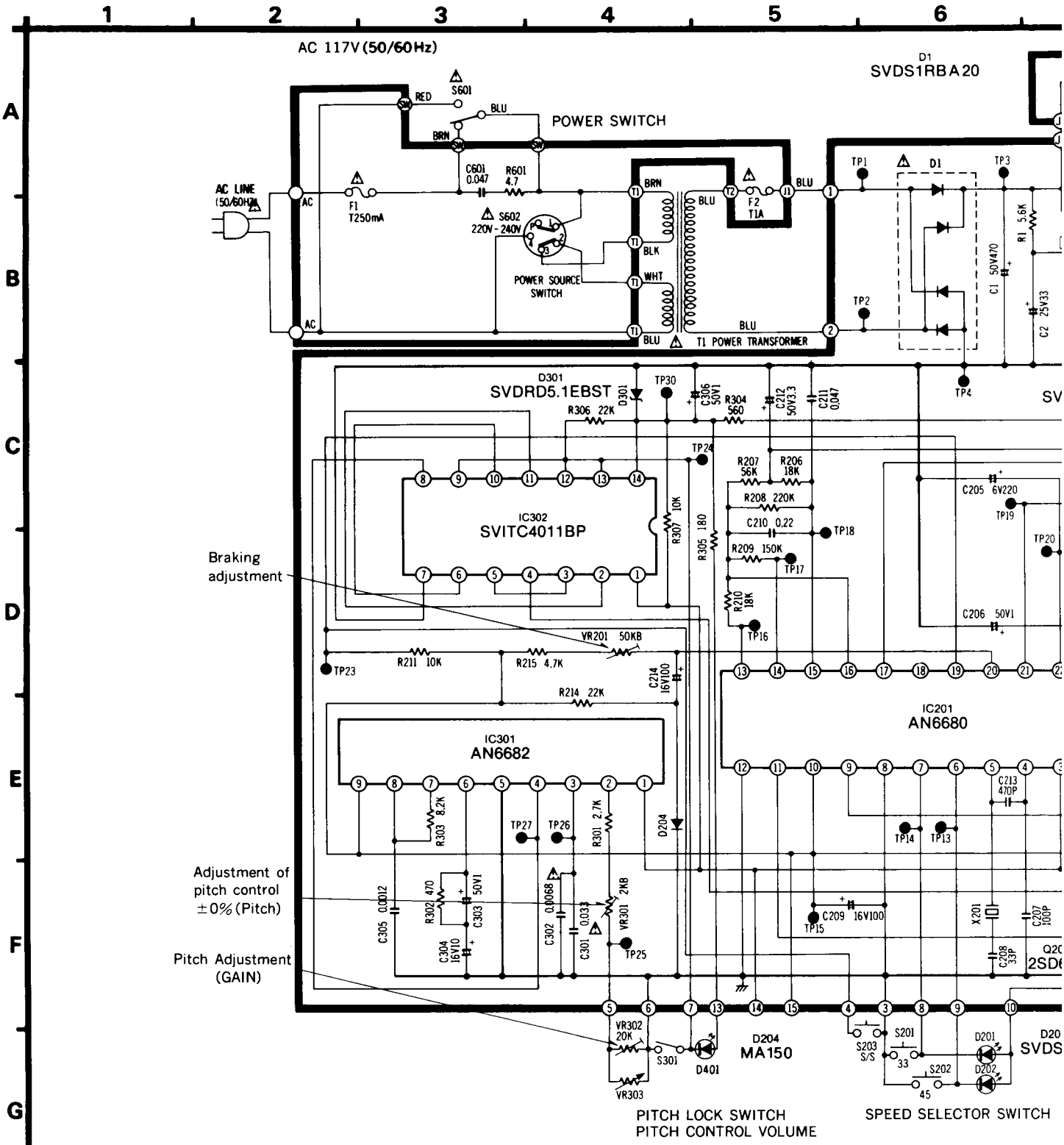


## ■ TERMINAL GUIDE OF TRANSISTOR AND IC

| AN6675 | AN6680 | AN6682 | SVITC4011BP | 2SC1846 | 2SC1328 | 2SD637 |
|---|---|---|---|---|---|---|
| 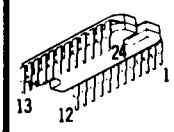 | 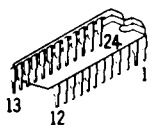 | 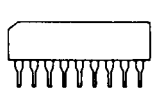 | 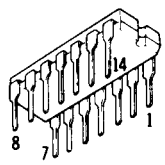 | 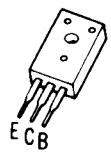 | 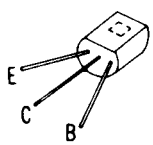 | 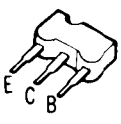 |

evelopment of new technology.)

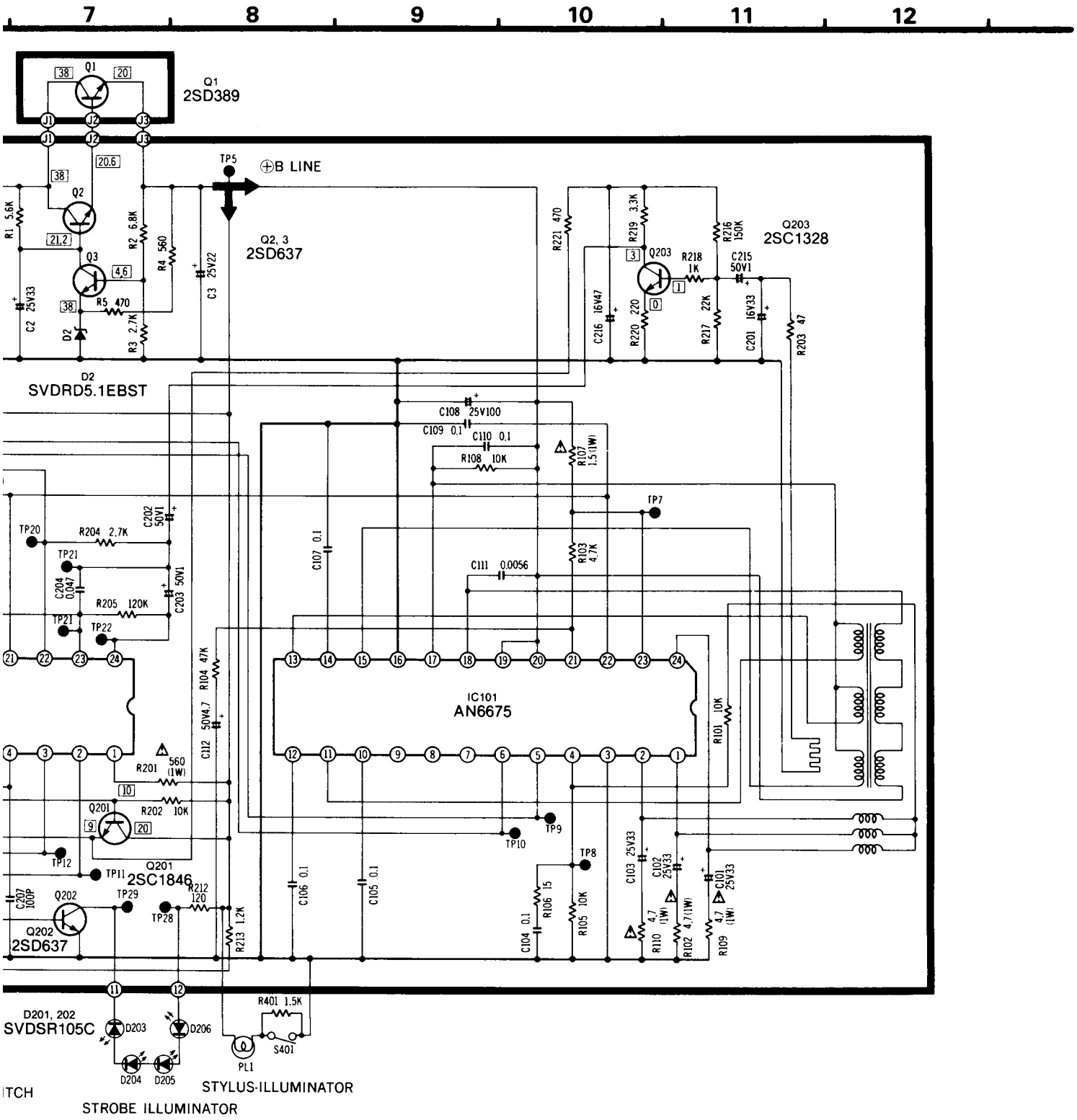


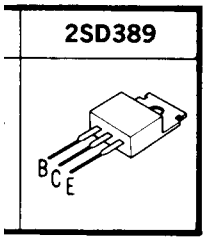


10

**NOTE:**

1. **S201:** Speed selector switch (33-1/3 r.p.m.) in "**ON**" position. (push condition)
2. **S202:** Speed selector switch (45 r.p.m.) in "**OFF**" position. (not-push condition)
3. **S203:** Start/Stop switch in "**OFF**" position. (not-push condition)
4. **S301:** Pitch lock switch in "**ON**" position. (center position)
5. **S401:** Stylus-illuminator switch in "**OFF**" position.
6. **S601:** Power switch in "**ON**" position.
7. **S602:** Power source switch in "**220–240V**" position.
8. The drive circuit IC voltage and wave form are not indicated in side the schematic diagram.
9. Indicated voltage valuse are the standard values for the unit measured by DC electronic circuit tester (high impedance) with the chassis taken as standard. Therefore, there may exist some errors in the voltage values, depending on the internal impedance of the DC circuit tester.
10. ⚠ indicates that only parts specified by the manufactuer be used for safety.

# REPLACEMENT PARTS LIST (Electrical)

**Notes:** 1. Part numbers are indicated on most mechanical parts.
Please use this number for parts orders.
2. ⚠ indicates that only parts specified by manufacturer be used for safety.
3. SL-1200MK2 (XG) → [XG], SL-1200MK2 (XA) → [XA], SL-1200MK2 (XGB) → [XGB]
SL-1200MK2 (XAL) → [XAL], SL-1200MK2 (E) → [E]

| Ref. No. | | Part No. | Part Name & Description |
|---|---|---|---|
| **INTEGRATED CIRCUITS** | | | |
| IC101 | | AN6675 | Integrated Circuit |
| IC201 | | AN6680 | Integrated Circuit |
| IC301 | | AN6682 | Integrated Circuit |
| IC302 | | SVITC4011BP | Integrated Circuit |
| **TRANSISTORS** | | | |
| Q1 | | 2SD389A-Q | Transistor |
| Q2, 3, 202 | | 2SD637 | Transistor |
| Q201 | | 2SC1846-R | Transistor |
| Q203 | | 2SC1328-T | Transistor |
| **DIODES** | | | |
| D1 | ⚠ | **SVDS1RBA40** | Rectifier |
| D2, 301 | | **MA1051** | Diode, Zener 5.1V |
| D204 | | **MA162A** | Diode |
| D201, 202 | | SVDSR-105C | Light Emitting Diode |
| D203~206 | | SVDEBR5505S | Light Emitting Diode |
| D401 | | SVDGL-9PG2 | Light Emitting Diode |
| **CRYSTAL** | | | |
| X201 | | SVQU306115 | Crystal, 4.19328MHz Oscillator |
| **VARIABLE RESISTORS** | | | |
| VR201 | | EVLS3AA00B54 | Braking Adjustment (BRAKE), 50kΩ (B) |
| VR301 | | EVMH1GA00B23 | Adjustment of Pitch Control ±0%(PITCH), 5kΩ (B) |
| VR302 | | EVLS6AA00B54 | Pitch Adjustment (Gain) 50kΩ |
| VR303 | | EVBJ05C19ABE | Pitch Control Volume |
| **SWITCHES** | | | |
| S201 | | EVQP5R04K | Switch, Speed Selector (33-1/3 r.p.m.) |
| S202 | | EVQP5R04K | Switch, Speed Selector (45 r.p.m.) |
| S203 | | SFDSSS5GL13C | Switch, Start/Stop |
| S401 | | SFDSD2MSL-4 | Switch, Stylus-illuminator |
| S601 | ⚠ | SFDSSS5GL13S | Switch, Power |
| S602 | ⚠ | SFDSHXW01317 | Switch, Power Source |
| **LAMP** | | | |
| PL1 | | SFDN122-01 | Lamp, Stylus-illuminator |
| **TRANSFORMER** | | | |
| T1 | ⚠ | SLTF5900 | Power Transformer |
| **FUSE** | | | |
| F1 | ⚠ | XBA2C025TIA | Fuse, T250 mA |
| F2 | ⚠ | XBA2C10TRO | Fuse, T1A |
| **RESISTORS** | | | |
| R1 | | **ERD25FJ562** | Carbon, 5.6kΩ, 1/4W, ± 5% |
| R2 | | **ERD25FJ682** | Carbon, 6.8kΩ, 1/4W, ± 5% |
| R3 | | **ERD25FJ272** | Carbon, 2.7kΩ, 1/4W, ± 5% |
| R4 | | **ERD25FJ561** | Carbon, 560Ω, 1/4W, ± 5% |
| R5 | | **ERD25FJ471** | Carbon, 470Ω, 1/4W, ± 5% |
| R101 | | **ERD25FJ103** | Carbon, 10kΩ, 1/4W, ± 5% |
| R102 | ⚠ | ERX1ANJ4R7 | Metal Film, 4.7Ω, 1W, ± 5% |
| R103 | | **ERD25FJ472** | Carbon, 4.7kΩ, 1/4W, ± 5% |
| R104 | | **ERD25TJ473** | Carbon, 47kΩ, 1/4W, ± 5% |
| R105 | | **ERD25FJ103** | Carbon, 10kΩ, 1/4W, ± 5% |
| R106 | | **ERD25FJ150** | Carbon, 15Ω, 1/4W, ± 5% |
| R107 | ⚠ | ERX1ANJ1R5 | Metal Film, 1.5Ω, 1W, ± 5% |
| R108 | | **ERD25FJ103** | Carbon, 10kΩ, 1/4W, ± 5% |
| R109, 110 | ⚠ | ERX1ANJ4R7 | Metal Film, 4.7Ω, 1W, ± 5% |
| R201 | ⚠ | ERG1ANJ561 | Metal Oxide, 560Ω, 1W, ± 5% |
| R202 | | **ERD25FJ103** | Carbon, 10kΩ, 1/4W, ± 5% |
| R203 | | **ERD25FJ470** | Carbon, 47Ω, 1/4W, ± 5% |
| R204 | | **ERD25FJ272** | Carbon, 2.7kΩ, 1/4W, ± 5% |
| R205 | | **ERD25TJ124** | Carbon, 120kΩ, 1/4W, ± 5% |
| R206 | | **ERD25TJ183** | Carbon, 18kΩ, 1/4W, ± 5% |
| R207 | | **ERD25TJ563** | Carbon, 56kΩ, 1/4W, ± 5% |
| R208 | | **ERD25TJ224** | Carbon, 220kΩ, 1/4W, ± 5% |
| R209 | | **ERD25TJ154** | Carbon, 150kΩ, 1/4W, ± 5% |
| R210 | | **ERD25TJ183** | Carbon, 18kΩ, 1/4W, ± 5% |
| R211 | | **ERD25FJ103** | Carbon, 10kΩ, 1/4W, ± 5% |
| R212 | | **ERD25FJ121** | Carbon, 120Ω, 1/4W, ± 5% |
| R213 | | **ERD25FJ122** | Carbon, 1.2kΩ, 1/4W, ± 5% |
| R214 | | **ERD25TJ223** | Carbon, 22kΩ, 1/4W, ± 5% |
| R215 | | **ERD25FJ472** | Carbon, 4.7kΩ, 1/4W, ± 5% |
| R216 | | **ERD25TJ154** | Carbon, 150kΩ, 1/4W, ± 5% |
| R217 | | **ERD25TJ223** | Carbon, 22kΩ, 1/4W, ± 5% |
| R218 | | **ERD25FJ102** | Carbon, 1kΩ, 1/4W, ± 5% |
| R219 | | **ERD25FJ332** | Carbon, 3.3kΩ, 1/4W, ± 5% |
| R220 | | **ERD25FJ221** | Carbon, 220Ω, 1/4W, ± 5% |
| R221 | | **ERD25FJ471** | Carbon, 470Ω, 1/4W, ± 5% |
| R301 | | ERO25CKF3301 | Metal Film, 3.3kΩ, 1/4W, ± 1% |
| R302 | | **ERD25FJ471** | Carbon, 470Ω, 1/4W, ± 5% |
| R303 | | **ERD25FJ822** | Carbon, 8.2kΩ, 1/4W, ± 5% |
| R304 | | **ERD25FJ152** | Carbon, 1.5kΩ, 1/4W, ± 5% |
| R306 | | **ERD25TJ223** | Carbon, 22kΩ, 1/4W, ± 5% |
| R601 | | **ERD25FJ4R7** | Carbon, 4.7Ω, 1/4W, ± 5% |
| **CAPACITORS** | | | |
| C1 | | **ECEB1HS471** | Electrolytic, 470μF, 50V |
| C2 | | **ECEA1VS330** | Electrolytic, 33μF, 35V |
| C3 | | **ECEA1ES220** | Electrolytic, 22μF, 25V |
| C101, 102 | | **ECEA1VS330** | Electrolytic, 33μF, 35V |
| C103 | | **ECEA1VS330** | Electrolytic, 33μF, 35V |
| C104, 105 | | ECQM1H104KZ | Polyester, 0.1μF, 50V, ±10% |
| C106, 107 | | ECQM1H104KZ | Polyester, 0.1μF, 50V, ±10% |
| C108 | | **ECEA1ES101** | Electrolytic, 100μF, 25V |
| C109, 110 | | ECQM1H104KZ | Polyester, 0.1μF, 50V, ±10% |
| C111 | | ECQM1H562KZ | Polyester, 0.0056μF, 50V, ±10% |
| C112 | | **ECEA1JS4R7** | Electrolytic, 4.7μF, 63V |
| C201 | | **ECEA1CS330** | Electrolytic, 33μF, 16V |
| C202, 203 | | **ECEA50Z1** | Electrolytic, 1μF, 50V |
| C204 | | ECQM1H473KZ | Polyester, 0.047μF, 50V, ±10% |
| C205 | | **ECEA1AS221** | Electrolytic, 220μF, 10V |
| C206 | | **ECEA50Z1** | Electrolytic, 1μF, 50V |
| C207 | | ECCD1H101K | Ceramic, 100pF, 50V, ±10% |
| C208 | | ECCD1H390K | Ceramic, 39pF, 50V, ±10% |
| C209 | | **ECEA1ES101** | Electrolytic, 100μF, 16V |
| C210 | | ECQM1H224KZ | Polyester, 0.22μF, 50V, ±10% |
| C211 | | ECQM1H473KZ | Polyester, 0.047μF, 50V, ±10% |
| C212 | | **ECEA50Z3R3** | Electrolytic, 3.3μF, 50V |
| C213 | | ECCD1H471K | Ceramic, 470pF, 50V, ±10% |
| C214 | | **ECEA1ES101** | Electrolytic, 100μF, 25V |
| C215 | | **ECEA50Z1** | Electrolytic, 1μF, 50V |
| C216 | | **ECEA1ES470** | Electrolytic, 47μF, 25V |
| C301, 302 | ⚠ | ECQK1123FZ | Polyester, 0.012μF, 125V, ± 1% |
| C303 | | **ECEA50Z1** | Electrolytic, 1μF, 50V |
| C304 | | **ECEA1HS100** | Electrolytic, 10μF, 50V |
| C305 | | ECQM1H122KZ | Polyester, 0.0012μF, 50V, ±10% |
| C306 | | **ECEA50Z1** | Electrolytic, 1μF, 50V |
| C601 | | ECNC4A473M | Paper, 0.047μF, 400V, ±20% |

## BLOCK DIAGRAM

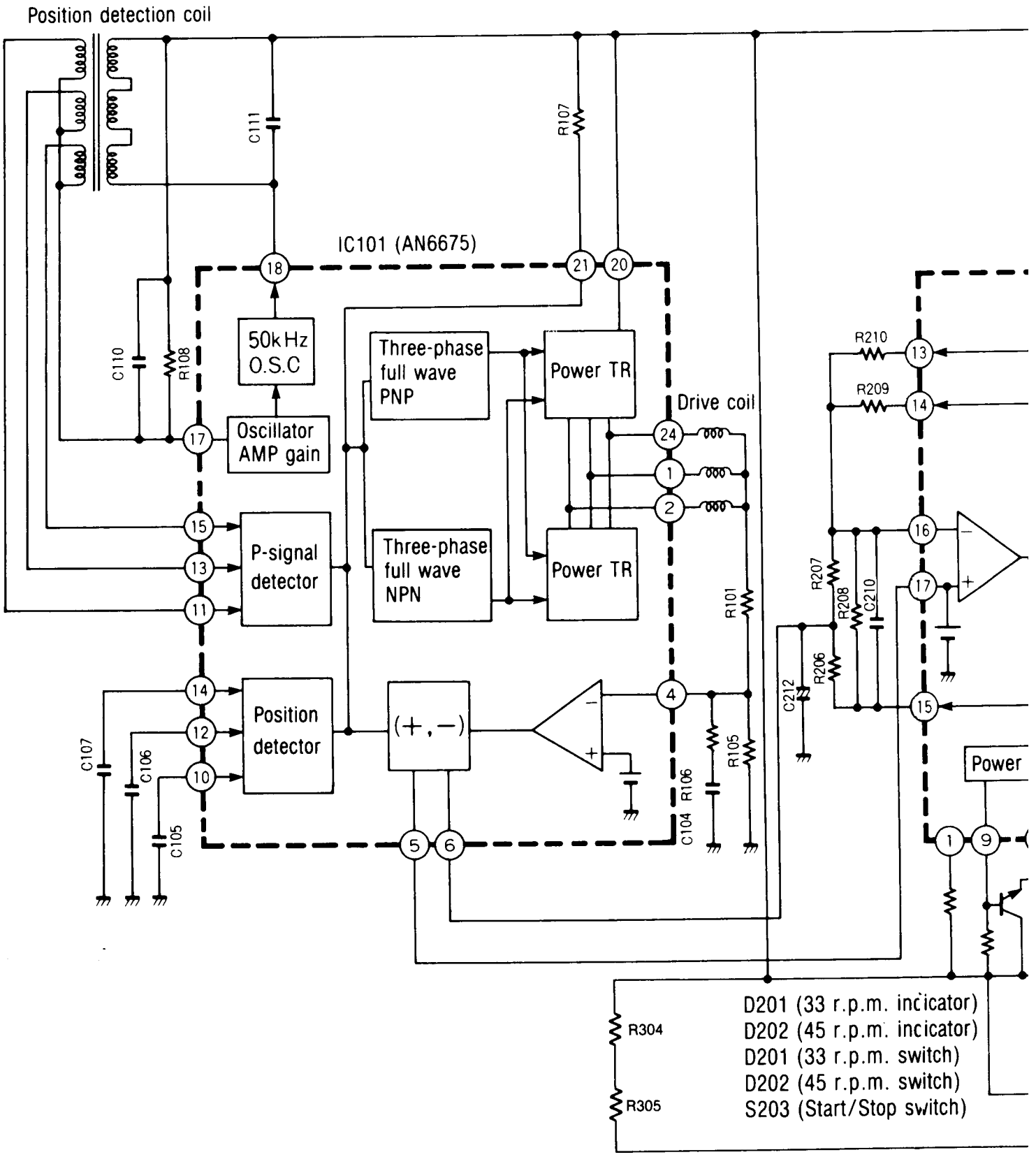

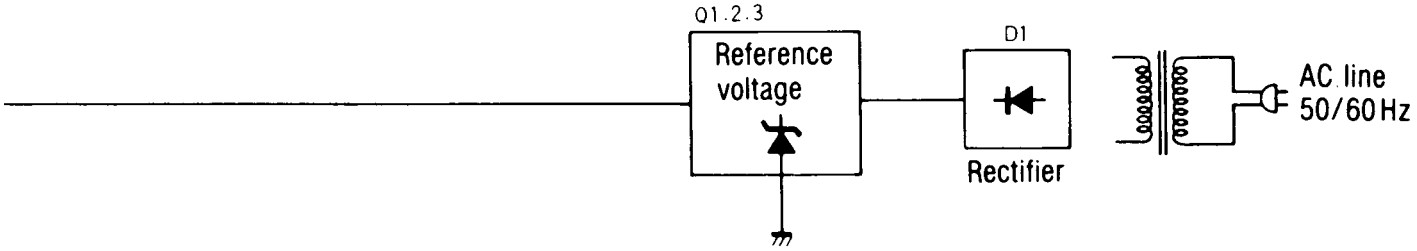
Q1.2.3
Reference voltage
D1
Rectifier
AC line
50/60Hz

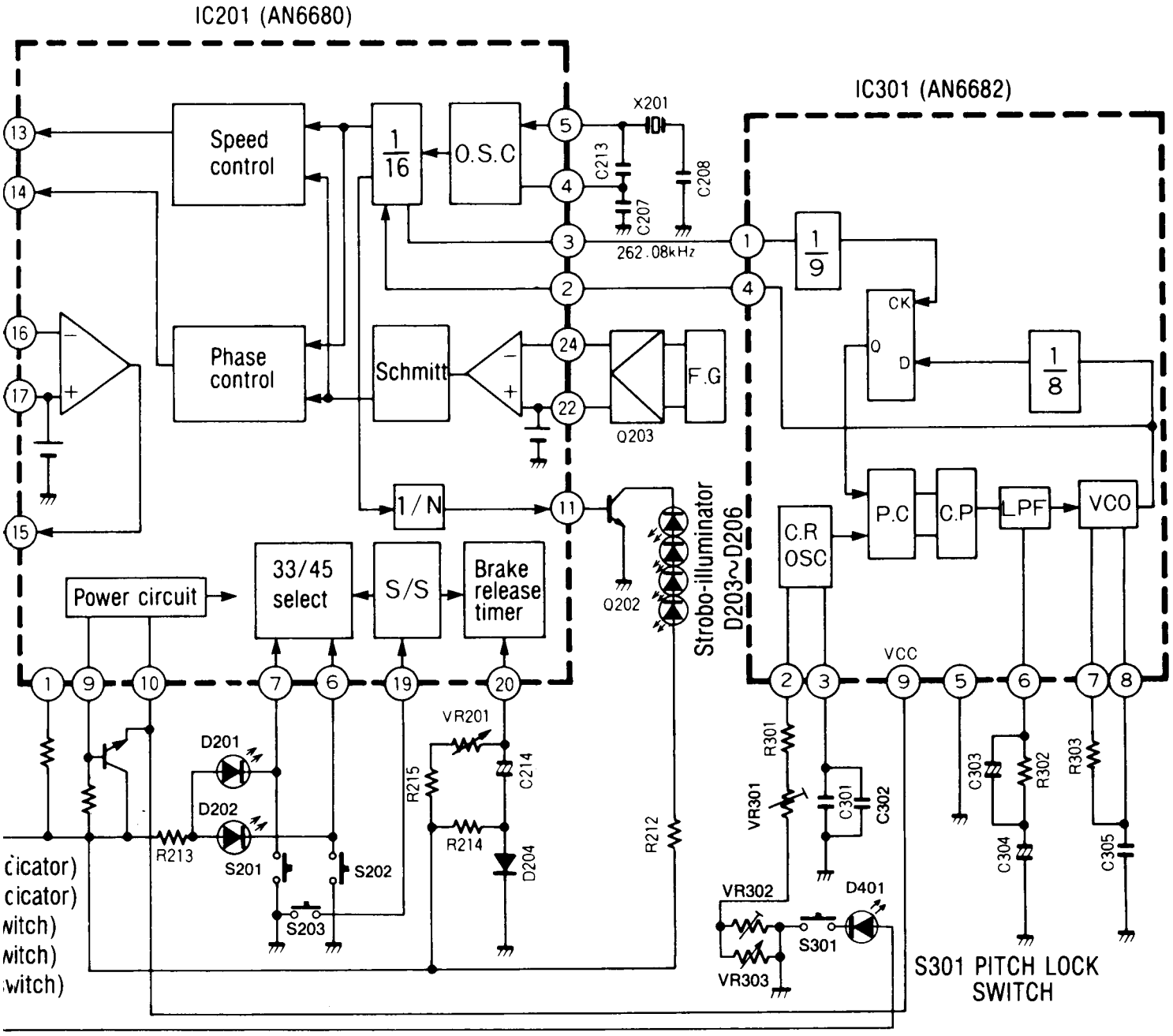
IC201 (AN6680)
IC301 (AN6682)
Speed control
Phase control
1/16
O.S.C
X201
C213
C207
C208
262.08kHz
Schmitt
F.G
Q203
1/N
Q202
Strobo-illuminator
D203~D206
Power circuit
33/45 select
S/S
Brake release timer
1/9
1/8
CK
D
P.C
C.P
LPF
VCO
C.R OSC
VCC
R301
VR301
C301
C302
C303
R302
R303
C304
C305
VR302
VR303
S301
D401
S301 PITCH LOCK SWITCH
VR201
C214
R215
R214
D204
R212
D201
D202
R213
S201
S202
S203

## ADJUSTMENT (Electrical)

Notes:
- Make the following adjustments after replacing parts such as IC's, transistors, diodes, etc.
- Condition of the set.
  1. Power switch ..... ON
  2. Pitch control ..... Center position
  3. Speed selector switch ..... 33-1/3 r.p.m.
- Instruments to be used
  1. Tester
  2. Frequency counter

| | Adjustment | Connection Points | Adjustment Point | Adjustment Method |
|---|---|---|---|---|
| A | Adjustment of pitch control ±0% (PITCH) | Frequency counter<br>⊕ — TP27<br>⊖ — GROUND | VR301 | 1. Pitch control switch to center position.<br>2. Adjust VR301 for 262.08 kHz ±0.05 kHz of frequency. |
| B | Adjustment of pitch control gain | Tester<br>TP31 and<br>TP32 | VR302 | Adjust VR302 for 2.7 kΩ ±0.1 of resistance value |
| C | Braking adjustment (BRAKE) | – | VR201 | Adjust VR201 for complete stop within 120° ~ 270° after stop signal initiated. (Turntable becomes free a few seconds after stop)<br> 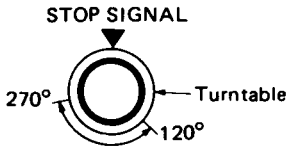 |

## REFERENCE VOLTAGE AND WAVEFORM AT EACH IC PIN

**IC101 (AN6675)**

| | Start | Stop | | Start | Stop | | Start | Stop |
|---|---|---|---|---|---|---|---|---|
| ① | 2V | 2V | ⑫ | 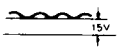 | 15V | ⑱ | Same as at right | 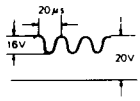 |
| ② | 2V | 2V | | | | | | |
| ③ | 0V | 0V | | | | | | |
| ④ | 5V | 5V | ⑬ | 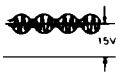 | 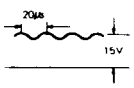 | | | |
| ⑤ | 5V | 5V | | | | ⑲ | 20V | 20V |
| ⑥ | 5V | 6.6V | | | | ⑳ | 20V | 20V |
| ⑦ | 0V | 0V | ⑭ | 15V | 15V | ㉑ | 20V | 20V |
| ⑧ | 5V | 5V | ⑮ | 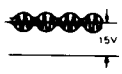 | 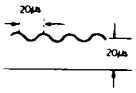 | ㉒ | 0.2V | 0.2V |
| ⑨ | 0V | 0V | | | | ㉓ | 20V | 20V |
| ⑩ | 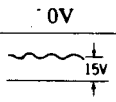 | 15V | | | | ㉔ | 1.7V | 1.7V |
| | | | ⑯ | 0V | 0V | | | |
| ⑪ | 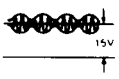 | 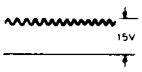 | ⑰ | 15V | 15V | | | |

# SL-1200MK2

## IC201 (AN6680)

| | Start | Stop | | Start | Stop | | Start | Stop |
|---|---|---|---|---|---|---|---|---|
| ① | 2.5V | 2.5V | ⑧ | 0V | 0V | ⑯ | 5V | 2.5V |
| ② | Same as at right | 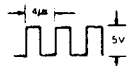 | ⑨ | 9.8V | 9.8V | ⑰ | 5V | 5V |
| | | | ⑩ | 10V | 10V | ⑱ | 0V | 0V |
| ③ | Same as at right | 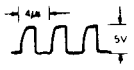 | ⑪ | Same as at right | 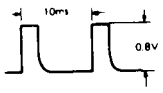 | ⑲ | 7.5V | 0V |
| | | | | | | ⑳ | 0V | 5V |
| | | | | | | ㉑ | 1.5V | 0V |
| | | | ⑫ | 0V | 0V | ㉒ | 3V | 3V |
| ④ | Same as at right | 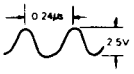 | ⑬ | 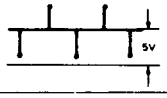 | 0.2V | ㉓ | 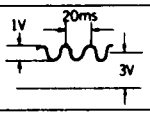 | 3V |
| ⑤ | Same as at right | 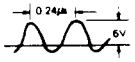 | ⑭ | 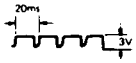 | 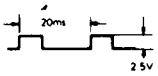 | ㉔ | 2.8V | 2.8V |
| ⑥ | 3.4V | 3.4V | ⑮ | 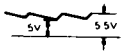 | 8V | | | |
| ⑦ | 0V | 0V | | | | | | |

## IC301 (AN6682)

| | Start | Stop | | Start | Stop | | Start | Stop |
|---|---|---|---|---|---|---|---|---|
| ① | Same as at right | 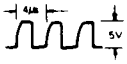 | ④ | Same as at right | 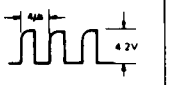 | ⑧ | Same as at right | 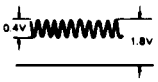 |
| ② | Same as at right | 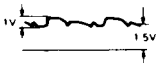 | ⑤ | 0V | 0V | ⑨ | 9V | 9V |
| | | | ⑥ | 3.9V | 3.9V | | | |
| ③ | Same as at right | 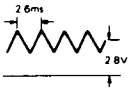 | ⑦ | Same as at right | 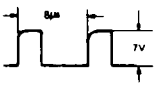 | | | |
| | | | | | | | | |

## IC302 (SVITC4011BP)

| | Start | Stop | | Start | Stop | | Start | Stop |
|---|---|---|---|---|---|---|---|---|
| ① | Same as as at right | 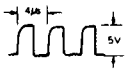 | ⑤ | Same as at right | 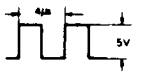 | ⑨ | 5V | 5V |
| | | | | | | ⑩ | 5V | 5V |
| | | | | | | ⑪ | 5V | 5V |
| ② | 5V | 5V | ⑥ | 5V | 5V | ⑫ | 0.6V | 0.6V |
| ③ | Same as at right | 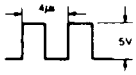 | ⑦ | 0V | 0V | ⑬ | 0.6V | 0.6V |
| | | | ⑧ | Same as at right | 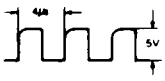 | ⑭ | 5V | 5V |
| ④ | 5V | 5V | | | | | | |

## Q202 (2SD637)

| | Start | Stop |
|---|---|---|
| E | 0V | 0V |
| C | Same as at right | 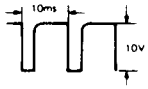 |
| B | Same as at right | 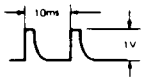 |

## ■ EXPLODED VIEWS

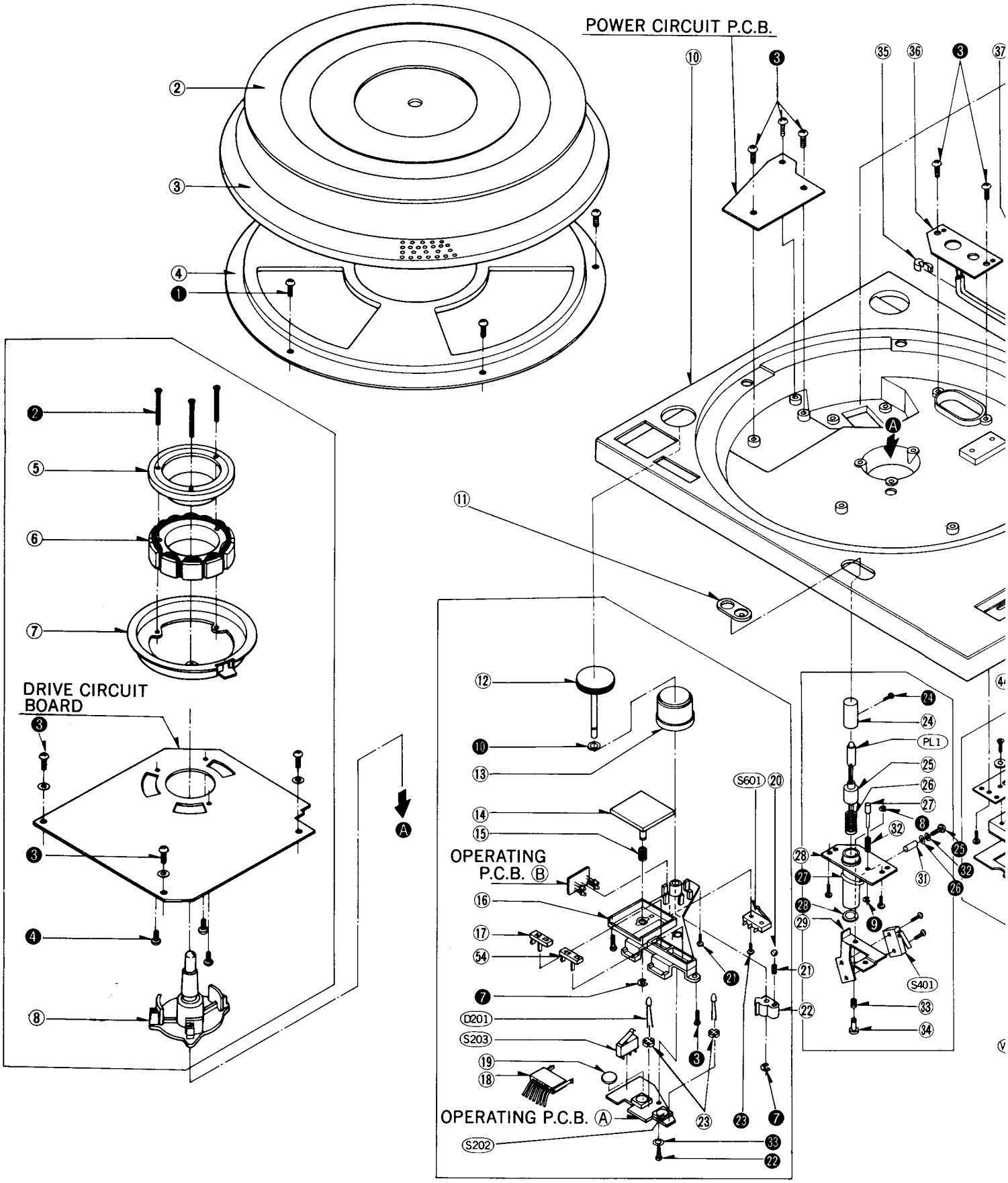

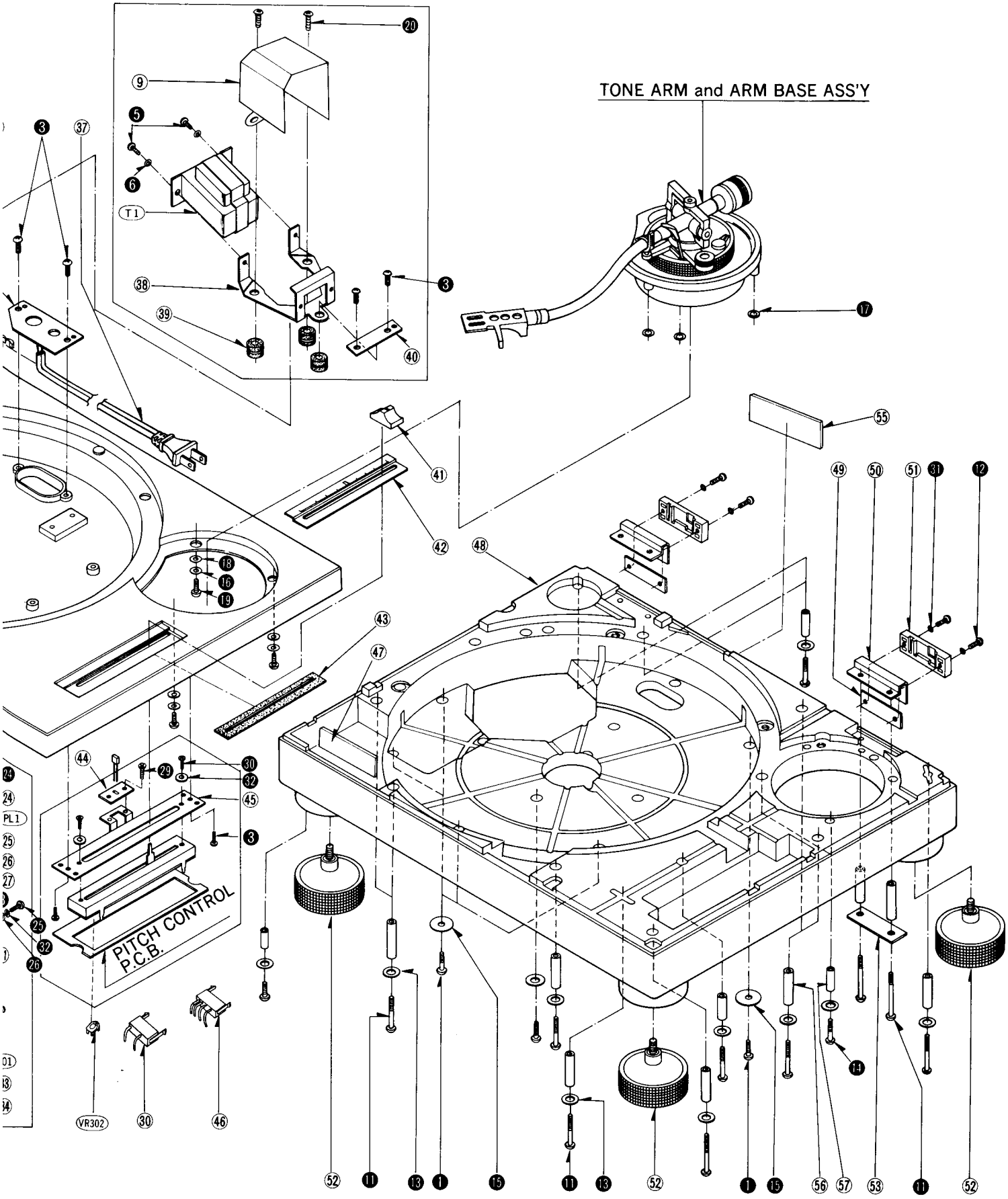
TONE ARM and ARM BASE ASS'Y
PITCH CONTROL P.C.B.
T1
PL1
VR302

# ■ REPLACEMENT PARTS LIST (Mechanical)

**Notes:** 1. Part numbers are indicated on most mechanical parts.
Please use this number for parts orders.
2. ⚠ indicates that only parts specified by manufacturer be used for safety.
3. SL-1200MK2 (XG) ⟶ [XG], SL-1200MK2 (XA) ⟶ [XA], SL-1200MK2(XGB) ⟶ [XGB]
SL-1200MK2 (XAL) ⟶ [XAL], SL-1200MK2 (E) ⟶ [E]

| Ref. No. | | Part No. | Part Name & Description |
|---|---|---|---|
| **CABINET and CHASSIS PARTS** | | | |
| 1 | | SFAD122-01A | Dust Cover |
| 2 | | SFTG172-01 | Turntable Mat |
| 3 | | SFTE172-01Z | Turntable |
| 4 | | SFUM172-05 | Cover, Turntable |
| 5 | | SFMGQ20-01 | Cover, Stater Frame Ass'y |
| 6 | | SFMG520-31A | Stater Frame |
| 7 | | SFMZ172-01E | FG Detector Coil Ass'y |
| 8 | | SFMZQ20-01A | Shaft, Stater Frame Ass'y |
| 9 | | SFUP122-12 | Plate, Shield |
| 10 | | SFAC122-01 | Cabinet |
| 11 | | SFUM172-04 | Ornament, Stylus-illuminator |
| 12 | | SFKT122-01 | Knob, Power Switch |
| 13 | | SFKK122-01E | Case, Strobe-illuminator |
| 14 | | SFKT015-06 | Knob, Start/Stop Switch |
| 15 | | SFQA122-01 | Spring, Start/Stop Knob |
| 16 | | SFUM122-01 | Base, Operation |
| 17 | | SFKT015-01E | Knob, Speed Selector (33-1/3 r.p.m.) |
| 18 | | SFDJ122-02E | Connector, 7-PIN |
| 19 | | SFGZ122-01 | Spacer, Rubber (Speed Selector) |
| 20 | | SFYB5-32 | Ball, Switch Cam |
| 21 | | SFQA520-01 | Spring, Switch Cam |
| 22 | | SFUM122-03 | Cam, Switch |
| 23 | | SFUM015-11 | Spacer, LED |
| 24 | | SFKK172-01 | Cover, Lamp |
| 25 | | SFXB122-02 | Boss, Drive |
| 26 | | SFQA172-01 | Spring, Drive Boss |
| 27 | | SFXJ172-01 | Pin, Lock Canceler |
| 28 | | SFUP122-02E | Bracket, Stylus-illuminator |
| 29 | | SFUP122-03 | Plate, Lock OPeration |
| 30 | | SFDJ122-03E | Connector, 3-PIN |
| 31 | | SFXO172-01 | Pin, Guide |
| 32 | | SFQA520-01 | Spring, Lock Canceler Pin |
| 33 | | SFQA001-02 | Spring, Lock Operating Plate M'tg |
| 34 | | SFXJ172-05 | Pin, Lock Operating Plate M'tg |
| **35** except [XAL] | | SFSR4N4 | Clamper, AC Cord |
| **35** [XAL] only | | SFHK040L | Clamper, AC Cord |
| **36** except [XAL] | | SFUP025X01 | Bracket, AC Cord |
| **36** [XAL] only | | SFUP025-01 | Bracket, AC Cord |
| **37** except [XAL] | ⚠ | RJA23ZC | AC Cord |
| **37** [XAL] only | ⚠ | QFC1208M | AC, Cord |
| 38 | | SFUP132-03 | Bracket, Power Transformer |
| 39 | | SFGC122-01 | Cushion, Power Transformer |
| 40 | | SFUP122-10 | Spacer, Power Transformer |
| 41 | | SFKT122-02 | Knob, Pitch Control Volume |
| 42 | | SFKK122-03 | Ornament, Pitch Control Volume |
| 43 | | SFUZ122-01 | Shading Cloth, Pitch Control Volume |
| 44 | | SFUP122-09 | Holder, LED |
| 45 | | SFUP122-01 | Bracket, Pitch Control Volume |
| 46 | | SFDJ122-01E | Connector, 4-PIN |
| 47 | | SFUP122-13 | Supporter, Bottom Base |
| 48 | | SFAU122-01 | Base, Bottom |
| 49 | | SFUP122-05 | Supporter (A), Hinge |
| 50 | | SFUP122-04 | Supporter (B), Hinge |
| 51 | | SFUM170-07 | Case, Hinge |
| 52 | | SFGC122-02E | Audio Insulator |
| 53 | | SFUP122-06 | Supporter (C), Hinge |
| 54 | | SFKT015-02E | Knob, Speed Selector (45 r.p.m) |
| **55** [XG, XA, XGB] | | SFNN122N01 | Name Plate |
| **55** [XAL] | | SFNN122L01 | Name Plate |
| **55** [E] | | SFNN122S01 | Instruction Book |
| 56 | | SFXO122-01 | Pipe (A) |
| 57 | | SFXO122-02 | Pipe (B) |
| 58 | | SFAT122-01A | Hinge Ass'y |
| **TONE ARM and ARM BASE** | | | |
| 61 | | SFPCC31001K | Head Shell |
| 62 | | SFPAM18201K | Tone Arm Ass'y |
| 63 | | SFPWG17201K | Balance Weight Ass'y |
| 64 | | SFPRT18201K | Lift Ass'y |
| 65 | | SFPZB17202 | Knob, Arm Base Lock |
| 66 | | SFQA829-03 | Spring, Lift Ass'y |
| 67 | | SFPAB13202 | Knob, Arm Lift |
| 68 | | SFPJL18202K | Oil Damper |
| 70 | | SFPZB12203 | Plate, Arm Base Cover |
| 71 | | SFUM170-06 | Spacer, Phono Cord |
| 72 | | SFPZB12204 | Clamper, Phono Cord |
| 73 | | SFPAB18201K | Tone Arm Fixing Plate Ass'y |

| Ref. No. | | Part No. | Part Name & Description |
|---|---|---|---|
| 74 | | SFPZB12201K | Plate, Position Fix |
| 75 | | SFDH028-01 | Phono Cord |
| 76 | | SFEL028-01E | Ground Wire |
| 77 | | SFPRT17201K | Arm Rest |
| 78 | | SFPKD17203 | Arm Base |
| 79 | | SFPKB17201S | Ring, Arm Base Operation |
| 80 | | SFPKD12201 | Bracket, Arm Base |
| 81 | | SFPAB17206 | Knob, Anti-skate Force Control |
| 82 | | SFGK132-01 | Cap, Rubber |
| **SCREWS, WASHERS and CIRCLIPS** | | | |
| ● | | **XTN3+8BFZ** | Screw |
| ● | | SFXGQ20-02 | Screw |
| ● | | **XTN3+8B** | Screw |
| ● | | **XTN26+6B** | Screw |
| ● | | **XTN4+10B** | Screw |
| ● | | **XWA4B** | Washer |
| ● | | **XUC3FT** | Circlip |
| ● | | **XUC2FT** | Circlip |
| ● | | **XUC25FT** | Circlip |
| ● | | SFXW910J02 | Washer |
| ● | | **XTN3+40BFZ** | Screw |
| ● | | **XSN3+10BVS** | Screw |
| ● | | XWE3F12FZ | Washer |
| ● | | **XTN3+25BFZ** | Screw |
| ● | | SFXW122-01 | Washer |
| ● | | **XWE3E10** | Washer |
| ● | | SFPEW1100 | Washer |
| ● | | SFPEW11003 | Washer |
| ● | | **XSN3+8S** | Screw |
| ● | | SFXG132-01 | Screw |
| ● | | **XTV3+8BFN** | Screw |
| ● | | **XTN3+10B** | Screw |
| ● | | **XTN2+10B** | Screw |
| ● | | XSN17+3FY | Screw |
| ● | | **XSN3+14S** | Screw |
| ● | | SFXW172-04 | Washer |
| ● | | XUB14FT | Circlip |
| ● | | SFUZ172-05 | O Ring |
| ● | | **XTN3+6B** | Screw |
| ● | | **XSN3+6S** | Screw |
| ● | | **XWA3BFZ** | Washer |
| ● | | **XWA3B** | Washer |
| ● | | **XWG3** | Washer |
| ● | | SFXG829-1 | Screw |
| ● | | **XUC5FT** | Circlip |
| ● | | **XTW3+6B** | Screw |
| ● | | **XTV3+6BFN** | Screw |
| ● | | **XWE4A10EW** | Washer |
| ● | | **XTN3+25B** | Screw |
| ● | | XYN3+C6FZS | Screw |
| ● | | **XSN3+12BVS** | Screw |
| ● | | SFPEW17201 | Washer |
| ● | | XWG26 | Washer |
| **ACCESSORIES** | | | |
| **A1** except [E] | | SFNU122X01 | Instruction Book |
| **A1** [E] only | | SFNU122S01 | Instruction Book |
| A2 | | SFWE010 | Adaptor, 45 r.p.m. |
| A3 | | SFPEN3302 | Nut, Cartridge |
| A4 | | SFPEW9601 | Washer, Cartridge |
| A5 | | SFCZV8801 | Screw, Cartridge |
| A6 | | SFPEV9801 | Screw, Cartridge |
| A7 | | SFKO135-01 | Overhang Gauge |
| A8 | | SFPZB3501 | Shell Weight |
| A9 [XA] only | | SFDKI19118 | Plug, 2-PIN |
| **PACKINGS** | | | |
| P1 | | SFHP122M01 | Carton |
| P2 | | SFHH122-01 | Pad, Front |
| P3 | | SFHH122-02 | Pad, Rear |
| P4 | | SFHD122-01 | Pad, Top |
| P5 | | SFHD122-02 | Pad, (A), Turntable |
| P6 | | SFHD122-03 | Pad, (B), Turntable |
| P7 | | SFYH60X60 | Polyethylene Cover, Turntable Unit and Dust Cover |
| P8 | | SFYH40X45 | Polyehtylene Cover, Turntable |

## ■ EXPLODED VIEWS

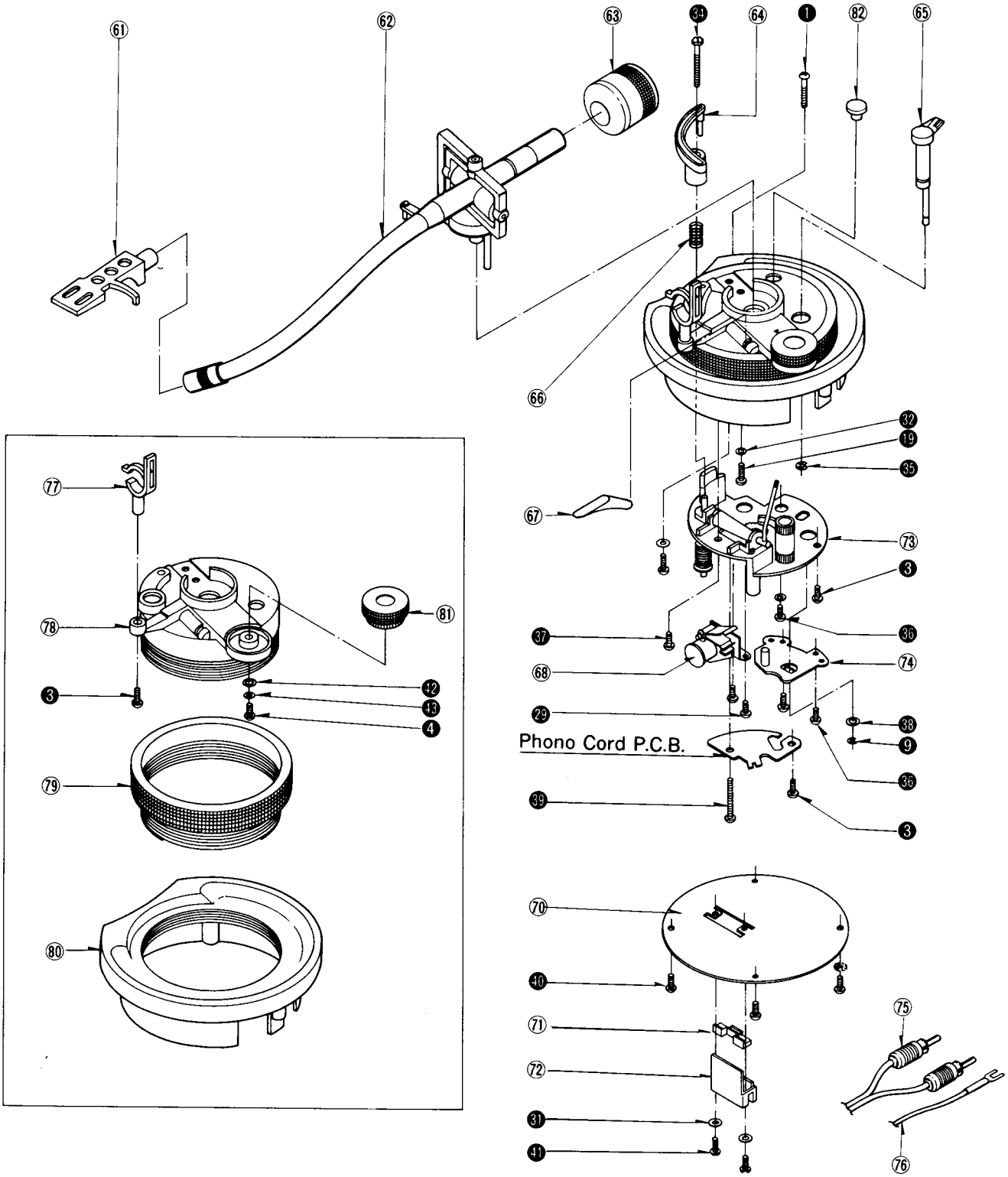

ORDER NO. DAD84040076S0

# Service Manual

Supplement

Turntable System

## SL-1200MK2

[M], [MC],
[E], [EK], [XL], [EG], [EB], [EH],
[EF], [Ei], [XA], [PA], [PE], [PC]

## SL-1210MK2

[E], [EG], [EH]

**Areas**

* [M] is available in the U.S.A.
* [MC] is available in Canada.
* [E] is available in Switzerland and Scandinavia.
* [EK] is available in United Kingdom.
* [XL] is available in Australia.
* [EG] is available in F.R. Germany.
* [EB] is available in Belgium.
* [EH] is available in Holland.
* [EF] is available in France.
* [Ei] is available in Italy.
* [XA] is available in Southeast Asia, Oceania, Africa, Middle Near East and Central South America.
* [PA] is available in far East PX.
* [PE] is available in European Military.
* [PC] is available in European Audio Club.

***SL-1200MK2 is the model for silver type.**
***SL-1210MK2 is the model for black type of SL-1200MK2.**

**Please use this manual together with the service manual for Model No. SL-1200MK2/1210MK2.**


SPECIFICATIONS\ТЕХНИЧЕСКИЕ ХАРАКТЕРИСТИКИ
DISASSEMBLY INSTRUCTIONS\ИНСТРУКЦИЯ ПО РАЗБОРКЕ
REPLACEMENT PARTS LIST\СПИСОК ЗАПАСНЫХ ЧАСТЕЙ
ADJUSTMENT POINTS\ТОЧКИ РЕГУЛИРОВКИ
MEASUREMENTS AND ADJUSTMENTS\ИЗМЕРЕНИЯ И РЕГУЛИРОВКИ
RESISTORS AND CAPACITORS\СОПРОТИВЛЕНИЯ И КОНДЕНСАТОРЫ
REPLACEMENT PARTS LIST\СПИСОК ЗАПАСНЫХ ЧАСТЕЙ
EXPLODED VIEW\СБОРОЧНЫЕ ЧЕРТЕЖИ
SCHEMATIC DIAGRAM\ПРИНЦИПИАЛЬНАЯ СХЕМА
BLOCK DIAGRAM\БЛОК - СХЕМА
PACKING \УПАКОВОЧНЫЕ МАТЕРИАЛЫ



Technics

**Matsushita Engineering and Service Company**
50 Meadowland Parkway,
Secaucus. New Jersey 07094

**Panasonic Hawaii Inc.**
91-238 Kauhi St. Ewa Beach
P.O. Box 774
Honolulu, Hawaii 96808-0774

**Matsushita Electric of Canada Limited**
5770 Ambler Drive, Mississauga,
Ontario, L4W 2T3

**Panasonic Sales Company, Division of Matsushita Electric of Puerto Rico, Inc.**
Ave, 65 De Infanteria, KM 9.7
Victoria Industrial Park
Carolina, Puerto Rico 00630

**Panasonic Tokyo**
**Matsushita Electric Industrial Co., Ltd.**
1-2, 1-chome, Shibakoen, Minato-ku, Tokyo 105 Japan

**Matsushita Electric Trading Co., Ltd.**
P.O. Box 288, Central Osaka Japan

## Specifications

Specifications are subject to change without notice for further improvement.
Weight and dimensions shown are approximate.

### ■ General

| | |
|---|---|
| **Power supply:** | 120V, AC 60 Hz (For [M], [MC] areas)<br>~110-120/220-240V, 50 or 60 Hz<br>(For other areas) |
| **Power consumption:** | 14 W (For [M], [MC] areas)<br>13.5 W (For other areas) |
| **Dimensions:**<br>**(W x H x D)** | 45.3 x 16.2 x 36 cm<br>(17-27/32" x 6-19/64" x 14-11/64") |
| **Weight:** | 12.5 kg (27.6 lb) |

#### Turntable section

| | |
|---|---|
| **Type:** | Quartz direct drive<br>Manual turntable |
| **Dirve method:** | Direct drive |
| **Motor:** | Brushless DC motor |
| **Turntable platter:** | Aluminum diecast<br>Diameter 33.2 cm (13-5/64")<br>Weight 2 kg (4.4 lb) |
| **Turntable speeds:** | 33-1/3 rpm and 45 rpm |
| **Starting torque:** | 1.5 kg · cm (1.3 lb · in) |
| **Build-up characteristics:** | 0.7 s. from standstill to 33-1/3 rpm |
| **Braking system:** | Electronic brake |
| **Wow and flutter:** | 0.01% WRMS*<br>0.025% WRMS (JIS C5521)<br>± 0.035% peak (IEC 98A Weighted) |

* This rating refers to turntable assembly alone, excluding effects of record, cartridge or tonearm, but including platter. Measured by obtaining signal from built-in frequency generator of motor assembly.

| | |
|---|---|
| **Rumble:** | –56 dB (IEC 98A Unweighted)<br>–78 dB (IEC 98A Weighted) |

### ■ Tonearm section

| | |
|---|---|
| **Type:** | Universal |
| **Effective length:** | 230 mm (9-1/16") |
| **Arm height adjustment range:** | 0 – 6 mm |
| **Overhang:** | 15 mm (19/32") |
| **Effective mass:** | 12 g (without cartridge) |
| **Offset angle:** | 22° |
| **Friction:** | Less than 7 mg (lateral, vertical) |
| **Tracking error angle:** | Within 2°32' (at the outer groove of 30 cm (12") record<br>Within 0°32' (at the inner groove of 30 cm (12") record |
| **Stylus pressure adjustment range:** | 0 – 2.5 g |
| **Applicable cartridge weight range:** | 6 – 10 g<br>13.5 – 17.5 g (including headshell) |
| **(with auxiliary weight):** | 9.5 – 13 g<br>17 – 20.5 g (including headhsell) |
| **(with shell weight):** | 3.5 – 6.5 g<br>11 – 14 g (including headshell) |
| **Headshell weight:** | 7.5 g |

# CHANGES

## ■ DISASSEMBLY INSTRUCTIONS

- **How to remove the bottom cover and bottom base.**

1. Remove the turntable mat and turntable.
2. Turn over the body on a soft cloth thaking care not to damage the dust cover.
3. Remove the insulators and the 21 setscrews **(Fig. 1 : ❶,❷,❸)** of the bottom cover.
4. Remove the 6 setscrews **(Fig. 2 : ❹)** of the bottom base.

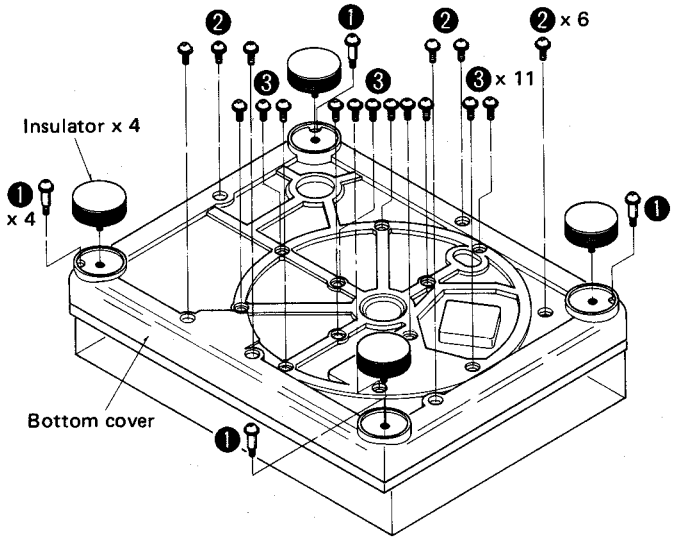


**Fig. 1**

- **How to remove the hinge case**

1. Remove the bottom cover. **(Refer to "How to remove the bottom cover".)**
2. Remove the 4 setscrews **(Fig. 2 : ❺)** of the hinge case bracket.
3. Remove the 4 setscrews **(Fig. 2 : ❻)** of the hinge case.

**Note:** The other disassembly procedure are the same as for before-change sets.

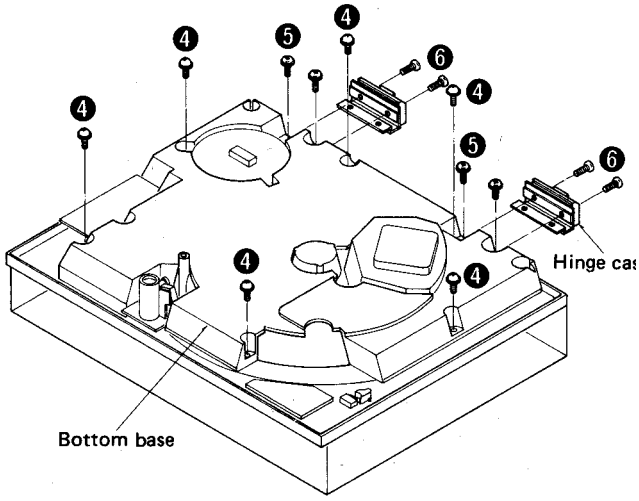


**Fig. 2**

## ■ REPLACEMENT PARTS LIST

**Notes:**

1. This parts list mentions only the difference between before and after change of SL-1200MK2/1210MK2.
2. Ⓚ-marked parts are used only for SL-1210MK2 (black type). And O-marked parts are used for SL1200MK2 (silver type).
3. Parts other than Ⓚ- and O-marked are used for both SL-1210MK2 and SL-1200MK2.
4. The "Ⓢ" mark is service standard parts and may differ from production parts.

**Areas**

* [M] is available in the U.S.A.
* [MC] is available in Canada.
* [E] is available in Switzerland and Scandinavia.
* [EK] is available in United Kingdom.
* [XL] is available in Australia.
* [EG] is available in F.R. Germany.
* [EB] is available in Belgium.
* [EH] is available in Holland.
* [EF] is available in France.
* [Ei] is available in Italy.
* [XA] is available in Southeast Asia, Oceania, Africa, Middle Near East and Central South America.
* [PA] is available in far East PX.
* [PE] is available in European Military.
* [PC] is available in European Audio Club.

| Ref. No. | Change of Part No. | | Part Name & Description | Per Set (Pcs.) | Remarks |
|---|---|---|---|---|---|
| | SL-1200MK2 (Before Change) | ➡ SL-1200MK2/1210MK2 (After Change) | | | |
| **INTEGRATED CIRCUIT** | | | | | |
| IC302 | SVITC4011BP | MN4011B | NAND Gate | 1 | |
| **TRANSISTOR** | | | | | |
| Q1 | 2SD389A–Q | 2SD1265 | Regulator | 1 | |
| **DIODES** | | | | | |
| D1 | SVDS1RBA40 | SVDS1RBA20Z | Rectifier | 1 | ⚠ |
| D201, 202 | SVDSR–105C | SVDPR3902S–9 | Speed Indicator | 2 | |
| D203 ~ 206 | SVDEBR5505S | SVDSLH54VT3 | Strobe | 4 | |
| D401 | SVDGL–9PG2 | SVDGL–9NG2 | Pitch Indicator | 1 | |
| **CRYSTAL** | | | | | |
| X201 | SVQU306115 | SVQMS4193 | 4.193 MHz, Oscillator | 1 | |
| **VARIABLE RESISTORS** | | | | | |
| VR301 | EVMH2GA00B53 | EVMH1GA00B23 | Pitch Control Adjustment, 2kΩ (B) | 1 | |
| VR303 | EVBJ05C19ABE | SFDZ122N11 | Pitch Control | 1 | |
| **SWITCHES** | | | | | |
| S203 | SFDSSS5GL13C | SFDSSS01GL13 | Start/Stop | 1 | |
| S601 | SFDSSS5GL13S | SFDSSS5GL13P | Power | 1 | ⚠ |
| **TRANSFORMER** | | | | | |
| T1 | SLT60EU7B | SLT66DTL3A [M] | Power Source | 1 | ⚠ |
| T1 | SLT60E31C | SLT66DT14C [MC] | Power Source | 1 | ⚠ |
| T1 | SLTF5900 | SLT66DTE13A [Other areas] | Power Source | 1 | ⚠ |

| Ref. No. | Change of Part No. SL-1200MK2 (Before Change) | → SL-1200MK2/1210MK2 (After Change) | Part Name & Description | Per Set (Pcs.) | Remarks |
|---|---|---|---|---|---|
| **RESISTORS** | | | | | |
| R4 | ERD25FJ561 | ERD25FJ471 | Carbon, 1/4W, 470Ω | 1 | Ⓢ |
| R209 | ERD25TJ154 | ERD25TJ334 | Carbon, 1/4W, 330kΩ | 1 | Ⓢ |
| R211 | ERD25FJ103 | ERD25FJ472 | Carbon, 1/4W, 4.7kΩ | 1 | Ⓢ |
| R212 | ERD25FJ121 | ERD25FJ151 | Carbon, 1/4W, 150Ω | 1 | Ⓢ |
| R222 | Addition | ERD25FJ391 | Carbon, 1/4W, 390Ω | 1 | Ⓢ |
| R301 | ERO25CKF3301 | ERO25CKF2701 | Metal Film, 1/4W, 2.7kΩ | 1 | Ⓢ |
| R304 | ERD25FJ152 | ERD25FJ561 | Carbon, 1/4W, 560Ω | 1 | Ⓢ |
| R401 | Addition | ERD50FJ152 | Carbon, 1/2W, 1.5kΩ | 1 | Ⓢ |
| R601 | ERD25FJ4R7 | ERD50FJ4R7 | Carbon, 1/2W, 4.7Ω | 1 | ⚠ Ⓢ |
| **CAPACITORS** | | | | | |
| C5, 6 | Addition | ECQM1223KZ | Polyester, 125V, 0.022μF | 1 | ⚠ |
| C104 ~ 107 | ECQM1H104KZ | ECQM1H104JZ | Polyester, 50V, 0.1μF | 4 | Ⓢ |
| C109, 110 | ECQM1H104KZ | ECQM1H104JZ | Polyester, 50V, 0.1μF | 2 | Ⓢ |
| C111 | ECQM1H562KZ | ECQM1H562JZ | Polyester, 50V, 0.0056μF | 1 | Ⓢ |
| C204 | ECQM1H473KZ | ECQM1H473JZ | Polyester, 50V, 0.047μF | 1 | Ⓢ |
| C210 | ECQM1H224KZ | ECQM1H224JZ | Polyester, 50V, 0.22μF | 1 | Ⓢ |
| C211 | ECQM1H473KZ | ECQM1H473JZ | Polyester, 50V, 0.047μF | 1 | Ⓢ |
| C217 ~ 219 | Addition | ECKD1H104ZF | Ceramic, 50V, 0.1μF | 1 | Ⓢ |
| C301 | ECQK1123FZ | ECQK1333GZ | Polyester, 125V, 0.033μF | 1 | |
| C302 | ECQK1123FZ | ECQK1682GZ | Polyester, 125V, 0.0068μF | 1 | |
| C305 | ECQM1H122KZ | ECQM1H122JZ | Polyester, 50V, 0.0012μF | 1 | Ⓢ |
| **CABINET and CHASSIS PARTS** | | | | | |
| 9 | SFUP122–12 | Deletion | ---------- | 0 | |
| 10 | SFAC122–01 | SFAC122–01 | Cabinet (Silver) | 1 | ○ |
| | | SFAC124S01 | Cabinet (Black) | 1 | Ⓚ |
| 25 | SFXB122–02 | SFXB122–06 | Boss, Drive | 1 | |
| 33 | SFQA001–02 | SFQA122–03 | Spring | 1 | |
| 36 | SFUP025–01 | SFUP122–16 [M, MC, PA, PE, PC] | Bracket, AC Cord | 1 | |
| | SFUP025X01 | SFUP122X01 [Other areas] | Bracket, AC cord | 1 | |
| 38 | SFUP132–03 | SFGC122–03 | Cushion | 2 | |
| 40 | SFUP122–10 | Deletion | ---------- | 0 | |
| 42 | SFKK122–03 | SFKK122–03 | Plate (Silver) | 1 | |
| | | SFKK124S01 | Plate (Black) | 1 | |
| 48 | SFAU122–01 | SFAU122–02 | Bottom Base | 1 | |
| 48–1 | Addition | SFAU122–03 | Bottom Cover | 1 | |
| 49 | SFUP122–05 | SFUP122–23 | Supporter (A), Hinge | 2 | |
| 50 | SFUP122–04 | SFUP122–24 | Supporter (B), Hinge | 2 | |
| 51 | SFUM170–07 | SFUMM02N04 | Case, Hinge | 2 | |
| 55 | SFNN122M01 | SFNN122M10 [M] | Name Plate | 1 | ○ |
| | SFNN122C01 | SFNN122C10 [MC] | Name Plate | 1 | ○ |
| | SFNN122S01 | SFNN122S10 [E] | Name Plate | 1 | ○ |
| | SFNN122L01 | SFNN122G10 [EK, XL] | Name Plate | 1 | ○ |
| | SFNN122X01 | SFNN122X10 [XA] | Name Plate | 1 | ○ |
| | Addition | SFNN122P10 [PA, PE] | Name Plate | 1 | ○ |
| | Addition | SFNN122P11 [PC] | Name Plate | 1 | ○ |
| | SFNN122N01 | SFNN122N10 [Other areas] | Name Plate | 1 | ○ |
| | Addition | SFNN124S10 [E] | Name Plate | 1 | Ⓚ |
| | Addition | SFNN124Q10 [EG, EH] | Name Plate | 1 | Ⓚ |
| 56 | SFX0122–01 | Deletion | ---------- | 0 | |
| 57 | SFX0122–02 | Deletion | ---------- | 0 | |
| 58 | SFAT122–01A | SFATM02N01A | Hinge | 1 | |

| Ref. No. | Change of Part No. SL-1200MK2 (Before Change) | → SL-1200MK2/1210MK2 (After Change) | Part Name & Description | Per Set (Pcs.) | Remarks |
|---|---|---|---|---|---|
| **TONEARM PARTS** | | | | | |
| 62 | SFPAM18201K | SFPAM18201K | Tonearm Ass'y (Silver) | 1 | ○ |
| | | SFPAM18202K | Tonearm Ass'y (Black) | 1 | Ⓚ |
| 79 | SFPKB17201S | SFPKB17204E | Ring, Arm Base Operation | 1 | |
| 82 | SFGK132–01 | SFGK132–01 | Cap (Silver) | 1 | ○ |
| | | SFGK133S01 | Cap (Black) | 1 | Ⓚ |
| **ACCESSORIES** | | | | | |
| A1 | SFNU122M01 | SFNU122M06 [M] | Instruction Book | 1 | |
| | SFNU122C01 | SFNU122C06 | Instruction Book | 1 | |
| | SFNU122S01 | SFNU122S01 [E] | Instruction Book | 1 | |
| | SFNU122G01 | SFNU122G01 [EK] | Instruction Book | 1 | |
| | Addition | SFNU122P01 [PA, PE, PC] | Instruction Book | 1 | |
| | SFNU122X01 | SFNU122X01 [Other areas] | Instruction Book | 1 | |
| A2 | SFWE010 | SFWE122–01 | 45 Adaptor | 1 | |
| **PACKING PARTS** | | | | | |
| P1 | SFHP122C01 | SFHP122C02 [MC, EF] | Carton Box (Silver) | 1 | ○ |
| | SFHP122M01 | SFHP122M02 [Other areas] | Carton Box (Silver) | 1 | ○ |
| | | SFHP124S02 | Carbon Box (Black) | 1 | Ⓚ |
| P9 | Addition | SPB1083 | Polyethylene Bag, Accessories | 2 | |
| P10 | Addition | SPJ15 | Polyethylene Bag, Shell Weight | 1 | |
| P11 | Addition | SFHZD03M01 | Polyethylene Bag, Dust Cover | 3 | |
| P12 | Addition | SFHZ122–01 | Polyethylene Bag, 45 Adaptor | 1 | |
| P13 | Addition | SPP189 | Polyethylene Bag, Cords | 2 | |

## ■ ADJUSTMENT POINTS

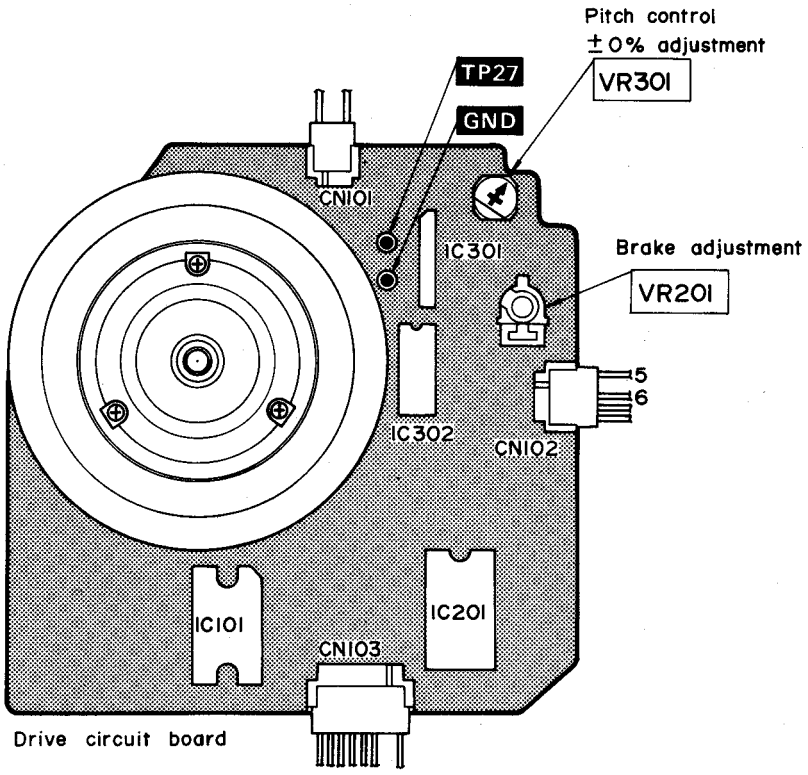


Fig. 3 (Abb. 3)

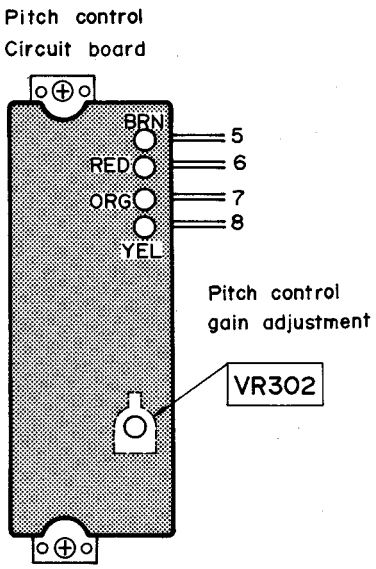


Fig. 4 (Abb. 4)

## ■ MEASUREMENTS AND ADJUSTMENTS English

- **Conditions of set, and instruments used**

1. Remove the panel cover.
2. Remove the bottom cover (when adjusting the pitch control gain).
3. Frequency counter
4. Tester

| | Adjustment | Connection | Parts adjusted | Procedure |
|---|---|---|---|---|
| 1 | **Pitch control ± 0% adjustment** | Frequency counter<br>(+) – TP27<br>(–) – Earth point | VR301<br>**(Fig. 3)** | 1. Connect the frequency counter and turn the power supply ON.<br>2. Set the pitch control knob to "0". (Indicator lights up.)<br>3. Adjust VR301 so that the frequency is 262.08 kHz ± 0.05 kHz. |
| 2 | **Pitch control gain adjustment** | Tester<br>(+) – CN102 terminal ⑤<br>(–) – CN102 terminal ⑥ | VR302<br>**(Fig. 4)** | 1. Set the pitch control knob to "0".<br>2. Pull out the connector CN102 of drive P.C.B.<br>3. Connect the tester to terminals,⑤and⑥of connector CN102 on the pitch control P.C.B. side.<br>4. Adjust VR302 so that the resistance value of the tester is 2.7 kΩ ± 0.1 kΩ. |
| 3 | **Brake adjustment** | ———————— | VR201<br>**(Fig. 3)** | 1. Adjust VR201 so that the rotation at 33 r.p.m. stops within the angle of 90° ~120° after depressing the stop button. |

# ■ RESISTORS AND CAPACITORS

**Notes:**
1. Part numbers are indicated on most mechanical parts. Please use this part number for parts orders.
2. Important safety notice: Components identified by ⚠ mark have special characteristics important for safety. When replacing any of these components use only manufacturer's specified parts.
3. The "Ⓢ" mark is service standard parts and may differ from production parts.
4. Bracketed indications in Ref. No. colum specify the area. Parts without these indications can be used for all area.
5. The unit of resistance is Ω (ohm). K = 1000Ω, M = 1000kΩ
6. The unit capacitance is μF (microfarad). P = $10^{-6}$ μF

**Areas**

* [M] is available in the U.S.A.
* [MC] is available in Canada.
* [E] is available in Switzerland and Scandinavia.
* [EK] is available in United Kingdom.
* [XL] is available in Australia.
* [EG] is available in F.R. Germany.
* [EB] is available in Belgium.
* [EH] is available in Holland.
* [EF] is available in France.
* [Ei] is available in Italy.
* [XA] is available in Southeast Asia, Oceania, Africa, Middle Near East and Central South America.
* [PA] is available in far East PX.
* [PE] is available in European Military.
* [PC] is available in European Audio Club.

## Numbering System of Resistor

Example

| ERD | 25 | F | J | 101 |
|---|---|---|---|---|
| Type | Wattage | Shape | Tolearance | Value |

| ERX | 2 | AN | J | 2R2 |
|---|---|---|---|---|
| Type | Wattage | Shape | Tolerance | Value |

| Resistor type | Wattage | Tolerance |
|---|---|---|
| ERD: Carbon | 25 : 1/4W | F : ±1% |
| ERG: Metal Oxide | 50 : 1/2W | J : ±5% |
| ERO: Metal Film | 1A : 1W | |
| ERX: Metal Film | 2A : 2W | |

## Numbering System of Capacitor

Example

| ECKD | 1H | 102 | Z | F |
|---|---|---|---|---|
| Type | Voltage | Value | Tolerance | Peculiarity |

| ECEA | 50 | M | R47 | R |
|---|---|---|---|---|
| Type | Voltage | Reculiarity use | Value | Special use |

| Capacitor Type | | Voltage | | Tolearnce |
|---|---|---|---|---|
| ECEA | : Electrolytic | OJ | : 6.3V | J : ±5% |
| ECEB | : Electrolytic | 1C | : 16V | K : ±5% |
| ECCD | : Ceramic | 1E | : 25V | M : ±20% |
| ECQM | : Polyester | 1H | : 50V | Z : +80%,−20% |
| ECQU | : Polyester | 1 | : 100V | |
| ECQF | : Polyester | 1A | : 125V | |
| ECNC | : Polyester | 4A | : 400V | |

| Ref. No. | | Part No. | Value |
|---|---|---|---|
| RESISTORS | | | |
| R1 | Ⓢ | ERD25FJ562 | 5.6K |
| R2 | Ⓢ | ERD25FJ682 | 6.8K |
| R3 | Ⓢ | ERD25FJ272 | 2.7K |
| R4,5 | Ⓢ | ERD25FJ471 | 470 |
| R101 | Ⓢ | ERD25FJ103 | 10K |
| R102 | Ⓢ | ERX1ANJ4R7 | 4.7 |
| R103 | Ⓢ | ERD25FJ472 | 4.7K |
| R104 | Ⓢ | ERD25TJ473 | 47K |
| R105 | Ⓢ | ERD25FJ103 | 10K |
| R106 | Ⓢ | ERD25FJ150 | 15 |
| R107 | Ⓢ | ERX1ANJ1R5 | 1.5 |
| R108 | Ⓢ | ERD25FJ103 | 10K |
| R109,110 | Ⓢ | ERX1ANJ4R7 | 4.7 |
| R201 | Ⓢ | ERG1ANJ561 | 560 |
| R202 | Ⓢ | ERD25FJ103 | 10K |
| R203 | Ⓢ | ERD25FJ470 | 47 |
| R204 | Ⓢ | ERD25FJ272 | 2.7K |
| R205 | Ⓢ | ERD25TJ124 | 120K |
| R206 | Ⓢ | ERD25TJ183 | 18K |
| R207 | Ⓢ | ERD25TJ563 | 56K |
| R208 | Ⓢ | ERD25TJ224 | 220K |
| R209 | Ⓢ | ERD25TJ334 | 330K |
| R210 | Ⓢ | ERD25TJ183 | 18K |
| R211 | Ⓢ | ERD25FJ472 | 4.7K |
| R212 | Ⓢ | ERD25FJ151 | 150 |
| R213 | Ⓢ | ERD25FJ122 | 1.2K |
| R214 | Ⓢ | ERD25TJ223 | 22K |
| R215 | Ⓢ | ERD25FJ472 | 4.7K |
| R216 | Ⓢ | ERD25TJ154 | 150K |
| R217 | Ⓢ | ERD25TJ223 | 22K |
| R218 | Ⓢ | ERD25FJ102 | 1K |
| R219 | Ⓢ | ERD25FJ332 | 3.3K |
| R220 | Ⓢ | ERD25FJ221 | 220 |
| R221 | Ⓢ | ERD25FJ471 | 470 |
| R222 | Ⓢ | ERD25FJ391 | 390 |
| R301 | Ⓢ | ER025CKF2701 | 2.7K |
| R302 | Ⓢ | ERD25FJ471 | 470 |
| R303 | Ⓢ | ERD25FJ822 | 8.2K |
| R304 | Ⓢ | ERD25FJ561 | 560 |
| R305 | Ⓢ | ERD25FJ181 | 180 |
| R306 | Ⓢ | ERD25TJ223 | 22K |
| R307 | Ⓢ | ERD25FJ272 | 2.7K |
| R401 | ⚠ Ⓢ | ERD50FJ152 | 1.5K |
| R601 | ⚠ Ⓢ | ERD50FJ4R7 | 4.7 |

| Ref. No. | | Part No. | Value |
|---|---|---|---|
| CAPACITORS | | | |
| C1 | | ECEB1HU471 | 470 |
| C2 | | ECEA1EU330 | 33 |
| C3 | | ECEA1EU220 | 22 |
| C5,6 | | ECQM1223KZ | 0.022 |
| C101,102 | | ECEA1EU330 | 33 |
| C103 | | ECEA1EU330 | 33 |
| C104,105 | Ⓢ | ECQM1H104JZ | 0.1 |
| C106,107 | Ⓢ | ECQM1H104JZ | 0.1 |
| C108 | | ECEA1EU101 | 100 |
| C109,110 | Ⓢ | ECQM1H104JZ | 0.1 |
| C111 | Ⓢ | ECQM1H562JZ | 0.0056 |
| C112 | | ECEA1HU4R7 | 4.7 |
| C201 | | ECEA1CU330 | 33 |
| C202,203 | | ECEA1HU010 | 1 |
| C204 | Ⓢ | ECQM1H473JZ | 0.047 |
| C205 | | ECEA0JU221 | 220 |
| C206 | | ECEA1HU010 | 1 |
| C207 | Ⓢ | ECCD1H101K | 100P |
| C208 | Ⓢ | ECCD1H220K | 22P |
| C209 | | ECEA1CU101 | 100 |
| C210 | Ⓢ | ECQM1H224JZ | 0.22 |
| C211 | Ⓢ | ECQM1H473JZ | 0.047 |
| C212 | | ECEA1HU3R3 | 3.3 |
| C213 | Ⓢ | ECCD1H471K | 470P |
| C214 | | ECEA1CU101 | 100 |
| C215 | | ECEA1HU010 | 1 |
| C216 | | ECEA1CU470 | 47 |
| C217,218 | | ECKD1H104ZF | 0.1 |
| C219 | | ECKD1H104ZF | 0.1 |
| C301 | | ECQK1333GZ | 0.033 |
| C302 | | ECQK1682GZ | 0.0068 |
| C303 | | ECEA1HU010 | 1 |
| C304 | | ECEA1CU100 | 10 |
| C305 | Ⓢ | ECQM1H122JZ | 0.0012 |
| C306 | | ECEA1HU010 | 1 |
| C601 [M] | ⚠ | ECQF1A473MD | 0.047 |
| C601 [MC] | ⚠ | ECQU1A47ME | 0.047 |
| C601 [Other ares] | ⚠ | ECNC4A473M | 0.047 |

# ■ REPLACEMENT PARTS LIST

**Notes:**
1. Part numbers are indicated on most mechanical parts. Please use this part number for parts orders.
2. Important safety notice: Components identified by ⚠ mark have special characteristics important for safety. When replacing any of these components use only manufacturer's specified parts.
3. Bracketed indications in Ref. No. columns specify the area. Parts without these indications can be used for all areas.
4. The "Ⓢ" mark is service standard parts and may differ from production parts.
5. The parenthesized numbers in the column of description stand for the quentity per set.
6. Ⓚ -marked parts are used only for SL-1210MK2 (black type). And ○-marked parts are used for SL-1200MK2 (silver type).
7. Parts other than Ⓚ-and ○-marked are used for both SL-1210MK2 and SL-1200MK2.

**Areas**

* [M] is available in the U.S.A.
* [MC] is available in Canada.
* [E] is available in Switzerland and Scandinavia.
* [EK] is available in United Kingdom.
* [XL] is available in Australia.
* [EG] is available in F.R. Germany.
* [EB] is available in Belgium.
* [EH] is available in Holland.
* [EF] is available in France.
* [Ei] is available in Italy.
* [XA] is available in Southeast Asia, Oceania, Africa, Middle Near East and Central South America.
* [PA] is available in far East PX.
* [PE] is available in European Military.
* [PC] is available in European Audio Club.

| Ref. No. | Part No. | Description |
|---|---|---|
| **INTEGRATED CIRCUITS** | | |
| IC101 | AN6675 | Turntable Drive |
| IC201 | AN6680 | Turntable Control |
| IC301 | AN6682 | Pitch Control |
| IC302 | MN4011B | NAND Gate |
| **TRANSISTORS** | | |
| Q1 | 2SD1265 | Regulator |
| Q2,3 | 2SD637 | Regulator |
| Q201 Ⓢ | 2SC1846-R | Regulator |
| Q202 | 2SD637 | LED Driver |
| Q203 Ⓢ | 2SC1328-T | FG Amp. |
| **DIODES** | | |
| D1 ⚠ | SVDS1RBA20Z | Rectifier |
| D2 | MA1051 | 5.1V Zener |
| D201,202 | SVDPR3902S-9 | Speed Indicator |
| D203~206 | SVDSLH54VT3 | Strobe |
| D204A | MA162A | Switching |
| D301 | MA1051 | 5.1V Zener |
| D401 | SVDGL-9NG2 | Pitch Indicator |

| Ref. No. | Part No. | Description |
|---|---|---|
| **CRYSTAL** | | |
| X201 | SVQMS4193 | 4.193MHz Oscillator |
| **VARIABLE RESISTORS** | | |
| VR201 Ⓢ | EVTS3MA00B54 | Brake Adjustment,50kΩ(B) |
| VR301 | EVMH1GA00B23 | Pitch Control±0% Adjustment,2kΩ(B) |
| VR302 Ⓢ | EVTS3MA00B54 | Pitch Control Gain Adjustment,50kΩ(B) |
| VR303 | SFDZ122N11 | Pitch Control |
| **SWITCHES** | | |
| S201,202 | EVQP5R04K | Speed Selector |
| S203 | SFDSSS01GL13 | Stort/Stop |
| S401 | SFDSD2MSL-C | Stylus-Illuminator |
| S601 ⚠ | SFDSSS5GL13P | Power |
| S602 Except for [M,MC] ⚠ | SFDSHXW01317 | Voltage Selector |

| Ref. No. | Part No. | Description |
|---|---|---|
| **LAMP** | | |
| PL1 ⚠ | SFDN122-01 | Stylus Illuminator |
| **TRANSFORMER** | | |
| T1 [M] ⚠ | SLT66DTL3A | Power Source |
| T1 [MC] ⚠ | SLT66DT14C | Power Source |
| T1 [Other areas] ⚠ | SLT66DTE13E | Power Source |
| **FUSES** | | |
| F1 [MC] ⚠ | XBA1F12NU14 | 125V,1.2A |
| F1 Except for [M,MC] ⚠ | XBA2C025T1A | 250V,T250mA |
| F2 Except for [M,MC] ⚠ | XBA2C10TR0 | 250V,T1A |

| Ref. No. | Part No. | Description |
|---|---|---|
| **CHABINET AND CHASSIS PARTS** | | |
| 1 | SFAD122-01A | Dust Cover (1) |
| 2 | SFTG172-01 | Turntable Mat (1) |
| 3 | SFTE172-01 | Turntable Platter Ass'y (1) |
| 4 | SFUM172-05 | Cover, Cabinet (1) |
| 5 | SFMGQ20-01 | Cover, Drive Coil (1) |
| 6 | SFMG520-31A | Drive Coil Ass'y (1) |
| 7 | SFMZ172-01E | FG Coil Ass'y (1) |
| 8 | SFMZQ20-01A | Shaft Ass'y, Turntable (1) |
| **10** ○ | SFAC122-01 | Cabinet (Silver) |
| **10** Ⓚ | SFAC124S01 | Cabinet (Black) (1) |
| 11 | SFUM172-04 | Ornament, Stylus Illuminator (1) |
| 12 | SFKT122-01 | Knob, Power Switch (1) |
| 13 | SFKK122-01E | Case, Strobe Illuminator (1) |
| 14 | SFKT015-06 | Button, Start/Stop (1) |
| 15 | SFQA122-01 | Spring, Start/Stop Button (1) |
| 16 | SFUM122-01 | Base, Operation (1) |
| 17 | SFKT015-01E | Button, Speed (33) (1) |
| 18 | SFDJ122-02E | Connector, 7pin (1) |
| 19 | SFGZ122-01 | Spacer, Rubber (1) |
| 20 | SFYB-5-32 | Ball, Switch Cam (1) |
| 21 | SFQA520-01 | Spring, Switch Cam (1) |
| 22 | SFUM122-03 | Cam, Power Switch (1) |
| 23 | SFUM015-11 | Spacer, Speed Indicator (2) |
| 24 | SFKK172-01 | Cover,Stylus Illuminator (1) |
| 25 | SFXB122-06 | Boss, Drive (1) |
| 26 | SFQA172-01 | Spring, Drive Boss (1) |
| 27 | SFXJ172-01 | Pin, Lock Canceler (1) |
| 28 | SFUP122-02E | Bracket, Stylus Illuminator (1) |
| 29 | SFUP122-03 | Plate, Lock Operation (1) |
| 30 | SFDJ122-03E | Connector, 3pin (1) |
| 31 | SFX0172-01 | Pin, Guide (1) |
| 32 | SFQA520-01 | Spring, Lock Canceler (1) |
| 33 | SFQA122-02 | Spring, Lock Operation Plate (1) |
| 34 | SFXJ172-05 | Pin, Lock Operation Plate (1) |
| **35**〔M,MC,PA PE,PC〕 | SFHK040L | Clamper, AC Cord (1) |
| **35**〔EK〕 | SFSR-5N-4 | Clamper, AC Cord (1) |
| **35**〔Other areas〕 | SFSR-4N-4 | Clamper, AC Cord (1) |
| **36**〔M,MC,PA PE,PC〕 | SFUP122-16 | Bracket, AC Cord (1) |
| **36**〔Other areas〕 | SFUP122X01 | Bracket, AC Cord (1) |
| **37** ⚠Ⓢ〔M,MC〕 | RJA9Y | AC Cord (1) |
| **37**〔EK〕 ⚠Ⓢ | QFC1205M | AC Cord (1) |
| **37**〔XL〕 ⚠Ⓢ | SJAG23 | AC Cord (1) |
| **37** ⚠Ⓢ〔PA,PE,PC〕 | SJA83 | AC Cord (1) |
| **37** ⚠Ⓢ〔Other areas〕 | SJA88 | AC Cord (1) |
| 38 | SFGC122-03 | Rubber, Power Transformer (2) |
| 39 | SFGC122-01 | Cushion, Power Transformer (3) |
| 41 | SFKT122-02 | Knob, Pitch Control (1) |
| **42** ○ | SFKK122-03 | Ornament (Silver), Pitch Control (1) |
| **42** Ⓚ | SFKK124S01 | Ornament (Black), Pitch Control (1) |
| 43 | SFUZ122-01 | Felt (1) |
| 44 | SFUP122-09 | Holder, LED (1) |
| 45 | SFUP122-01 | Bracket, Pitch Control (1) |
| 46 | SFDJ122-01E | Connector, 4pin (1) |
| 48 | SFAU122-03 | Bottom Base (1) |
| 48-1 | SFAU122-02 | Bottom Cover (1) |
| 49 | SFUP122-23 | Supporter (A),Hinge (2) |
| 50 | SFUP122-24 | Supporter (B), Hinge (2) |
| 51 | SFUMM02N04 | Case, Hinge (2) |

| Ref. No. | Part No. | Description |
|---|---|---|
| 52 | SFGC122-02E | Insulator (4) |
| 54 | SFKT015-02E | Button, Speed (45) (1) |
| **55**〔M〕 ○ | SFNN122M10 | Name Plate (1) |
| **55**〔MC〕 ○ | SFNN122C10 | Name Plate (1) |
| **55**〔E〕 ○ | SFNN122S10 | Name Plate (1) |
| **55**〔EK,XL〕 ○ | SFNN122G10 | Name Plate (1) |
| **55**〔XA〕 ○ | SFNN122X10 | Name Plate (1) |
| **55**〔PA,PE〕○ | SFNN122P10 | Name Plate (1) |
| **55**〔PC〕 ○ | SFNN122P11 | Name Plate (1) |
| **55**〔Other areas〕 ○ | SFNN122N10 | Name Plate (1) |
| **55**〔E〕 Ⓚ | SFNN124S10 | Name Plate (1) |
| **55** Ⓚ〔EG,EH〕 | SFNN124Q10 | Name Plate (1) |
| 58 | SFATM02N01A | Hinge (2) |
| 59 | SFUP122-25 | Plate,Power transformer (1) |
| **TONEARM PARTS** | | |
| 61 | SFPCC31001K | Headshell (1) |
| **62** ○ | SFPAM18201K | Tonearm Ass'y (Silver) (1) |
| **62** Ⓚ | SEPAM18202K | Tonearm Ass'y (Black) (1) |
| 63 | SFPWG17201K | Balance Weight (1) |
| 64 | SFPRT18201K | Lift Ass'y (1) |
| 65 | SFPZB17202 | Knob, Arm Base Lock (1) |
| 66 | SFQA829-03 | Spring, Lift Ass'y (1) |
| 67 | SFPAB13202 | Knob, Arn Lift (1) |
| 68 | SFPJL18202K | Oil Damper (1) |
| 70 | SFPZB12203 | Plate, Arm Base Cover (1) |
| 71 | SFUM170-06 | Spacer, Phono Cord (1) |
| 72 | SFPZB12204 | Clamper, Phono Cord (1) |
| 73 | SFPAB18201K | Tonearm Fixing Plate (1) |
| 74 | SFPZB12201K | Plate (1) |
| 75 | SFDH122-05 | Phono Cord (1) |
| 76 | SFEL028-01E | Ground Wire (1) |
| 77 | SFPRT17201K | Arm Rest (1) |
| **78** ○ | SFPKD17203 | Arm Base (Silver) (1) |
| **78** Ⓚ | SFPKD17205 | Arm Base (Black) (1) |
| 79 | SFPKB17204E | Ring,Arm Base Operation (1) |
| 80 | SFPKD12201 | Bracket, Arm Base (1) |
| 81 | SFPAB17206 | Knob, Anti-Skating (1) |
| **82** ○ | SFGK132-01 | Cap (Silver) (1) |
| **82** Ⓚ | SFGK133S01 | Cap (Black) (1) |
| **SCREW,NUT AND WASHERS** | | |
| N1 Ⓢ | XTN3+8BFZ | Screw (5) |
| N2 | SFXGQ20-02 | Screw (3) |
| N3 Ⓢ | XTN3+8B | Screw (8) |
| N4 Ⓢ | XWG3 | Washer (12) |
| N5 Ⓢ | XTN26+6B | Screw (3) |
| N6 Ⓢ | XTV3+8BFN | Screw (8) |
| N7 | SFXG172-01 | Screw (3) |
| N8 | XTN3+5J | Screw (2) |
| N9 | SFXW172-03 | Washer (1) |
| N10 | SFPEW11003 | Washer (6) |
| N11 Ⓢ | XWE3E10 | Washer (3) |
| N12 Ⓢ | XWA3B | Washer (8) |
| N13 Ⓢ | XSN3+10S | Screw (3) |
| N14 | SFXW910J02 | Washer (1) |
| N15 Ⓢ | XTN3+10B | Screw (5) |
| N16 Ⓢ | XTN2+10B | Screw (1) |
| N17 Ⓢ | XUC3FT | Circlip (2) |
| N18 | XSN17+3FY | Screw (1) |
| N19 Ⓢ | XUC2FT | Circlip (1) |
| N20 Ⓢ | XUC25FT | Circlip (1) |
| N21 Ⓢ | XSN3+14S | Screw (1) |
| N22 | RTW-12 | Circlip (1) |
| N23 Ⓢ | XSN2+10 | Screw (2) |
| N24 Ⓢ | XSN3+6S | Screw (2) |
| N25 Ⓢ | XTN3+6B | Screw (5) |
| N26 | XTWS3+14TFZ | Screw (6) |
| N27 | SFXG122-02 | Screw (11) |
| N29 | SFXG122-01 | Screw (4) |
| N30 | XTN3+14QFZ | Screw (6) |

| Ref. No. | Part No. | Description |
|---|---|---|
| N31 Ⓢ | XWG3FZ | Washer (6) |
| N32 Ⓢ | XSN3+14BVS | Screw (4) |
| N33 Ⓢ | XWA3BFZ | Washer (4) |
| N34 | SFXG829-1 | Screw (1) |
| N35 Ⓢ | XSN3+8S | Screw (2) |
| N36 Ⓢ | XUC5FT | Circlip (1) |
| N37 | SFPEV17202 | Screw (3) |
| N38 Ⓢ | XTN3+25B | Screw (1) |
| N39 | SFPEW1100 | Washer (1) |
| N40 Ⓢ | XSN3+6BVS | Screw (4) |
| N41 Ⓢ | XWC3BFZ | Washer (1) |
| N42 Ⓢ | XSN3+12BVS | Screw (2) |
| N43 Ⓢ | XWG3FZ | Washer (2) |
| N44 | SFXW701-02 | Washer (1) |
| N45 | SFPEW00705 | Washer (4) |
| N46 | XTW26+5E | Screw (1) |
| **ACCESSORIES** | | |
| **A1**〔M〕 | SFNU122M06 | Instruction Book (1) |
| **A1**〔MC〕 | SFNU122C06 | Instruction Book (1) |
| **A1**〔E,EB,EC〕 | SFNU122S01 | Instruction Book (1) |
| **A1**〔EK〕 | SFNU122G01 | Instruction Book (1) |
| **A1**〔PA, PE,PC〕 | SFNU122P01 | Instruction Book (1) |
| **A1**〔Other areas〕 | SFNU122X01 | Instruction Book (1) |
| A2 | SFWE010 | 45 Adaptor (1) |
| A3 | SFPEN3302 | Nut,Cartridge (2) |
| A4 | SFPEW9601 | Washer,Cartridge (2) |
| A5 | SFCZV8801 | Screw,Cartridge (2) |
| A6 | SFPEV9801 | Screw,Cartridge (2) |
| A7 | SFK0135-01 | Overhang Gauge (1) |
| A8 | SFPZB3501 | Shell Weight (1) |
| A9 ⚠〔XA〕Only | SFDKI19118 | 2pin Plug (1) |
| A10 | SFPWG17202 | Sub-weight (1) |
| A11 ⚠〔PA,PE, PC〕Only | QJP0603S | Adaptor, Gimens |
| **PACKING PARTS** | | |
| **P1**〔MC, EF〕 ○ | SFHP122C02 | Carton Box (Silver) (1) |
| **P1**〔Other areas〕 ○ | SFHP122M02 | Carton Box (Silver) (1) |
| **P1** Ⓚ | SFHP124S02 | Carton Box (Black) (1) |
| P2 | SFHH122-01 | Pad, Front (1) |
| P3 | SFHH122-02 | Pad, Rear (1) |
| P4 | SFHD122N05 | Pad, Top (1) |
| P5 | SFHD122-02 | Pad (A), Turntable (1) |
| P6 | SFHD122N06 | Pad (B), Turntable (1) |
| P7 | SFYH60X60 | Polyethylene Bag, Unit& Dust Cover (2) |
| P8 | SFYH40X45 | Polyethylene Bag, Turntable (1) |
| P9 | SPB1083 | Polyethylene Bag, Accessories (3) |
| P10 | SPJ15 | Polyethylene Bag, Shell Weight (1) |
| P11 | SFHZD03M01 | Cover Sheet, Dust Cover (1) |
| P12 | SFHZ122-01 | Cover Sheet, 45Adaptor (1) |
| P13 | SPP189 | Cover Sheet, Cords (2) |

# ■ EXPLODED VIEWS

## • Cabinet and Chassis Parts

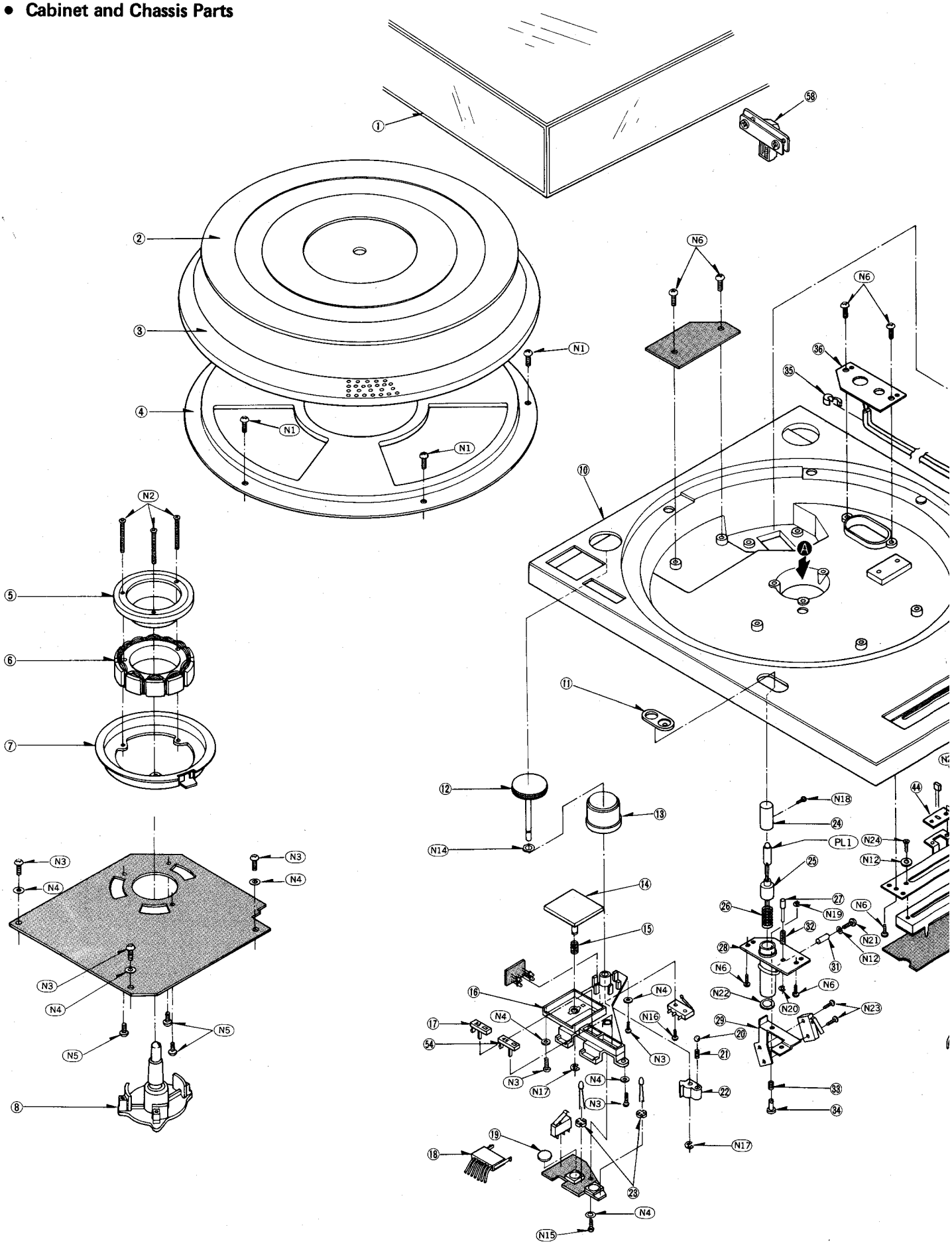

**Note: For the set with serial number sheet change mark [E], the power transformer is fitted as shown below.**

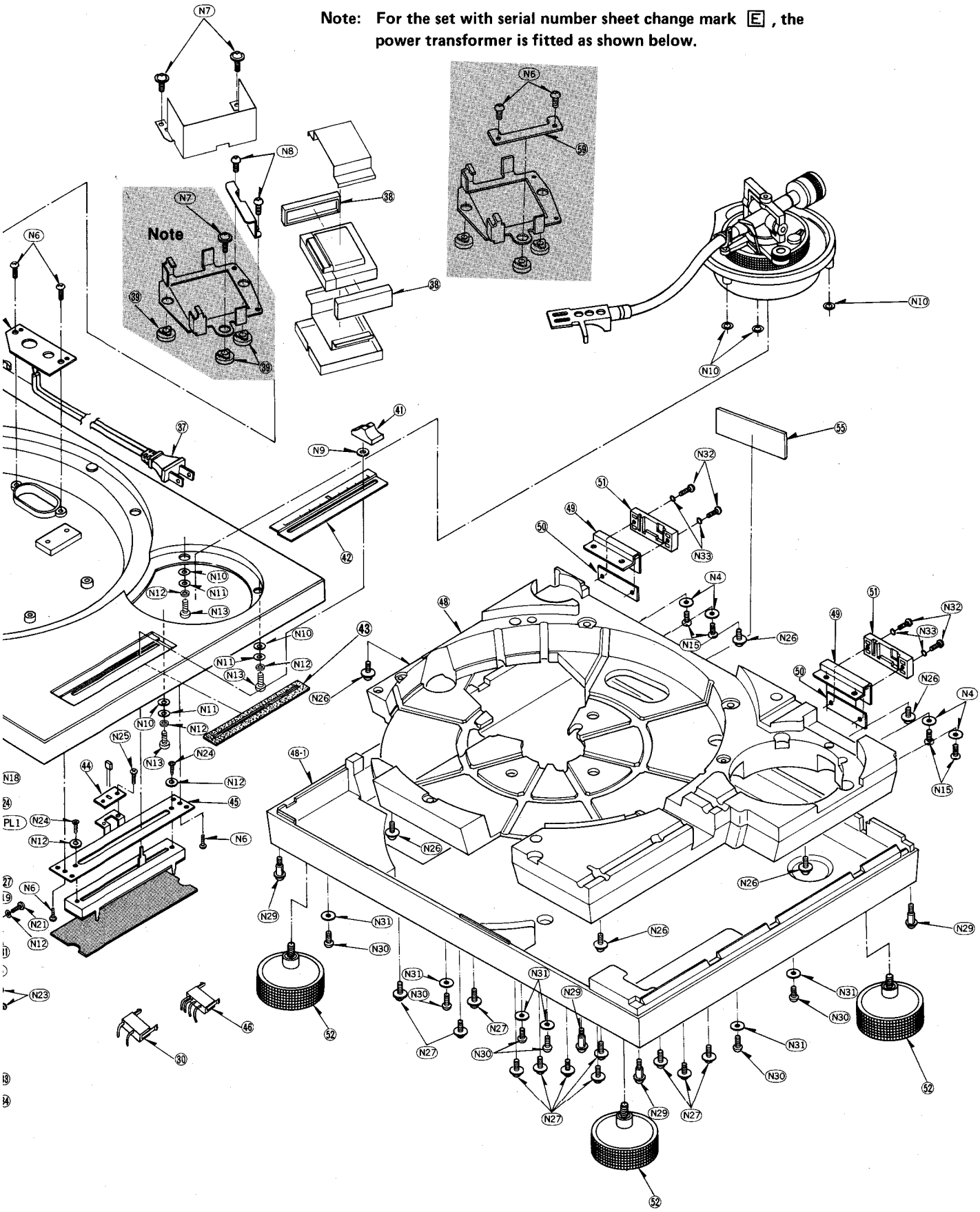

- **Tonearm Parts**

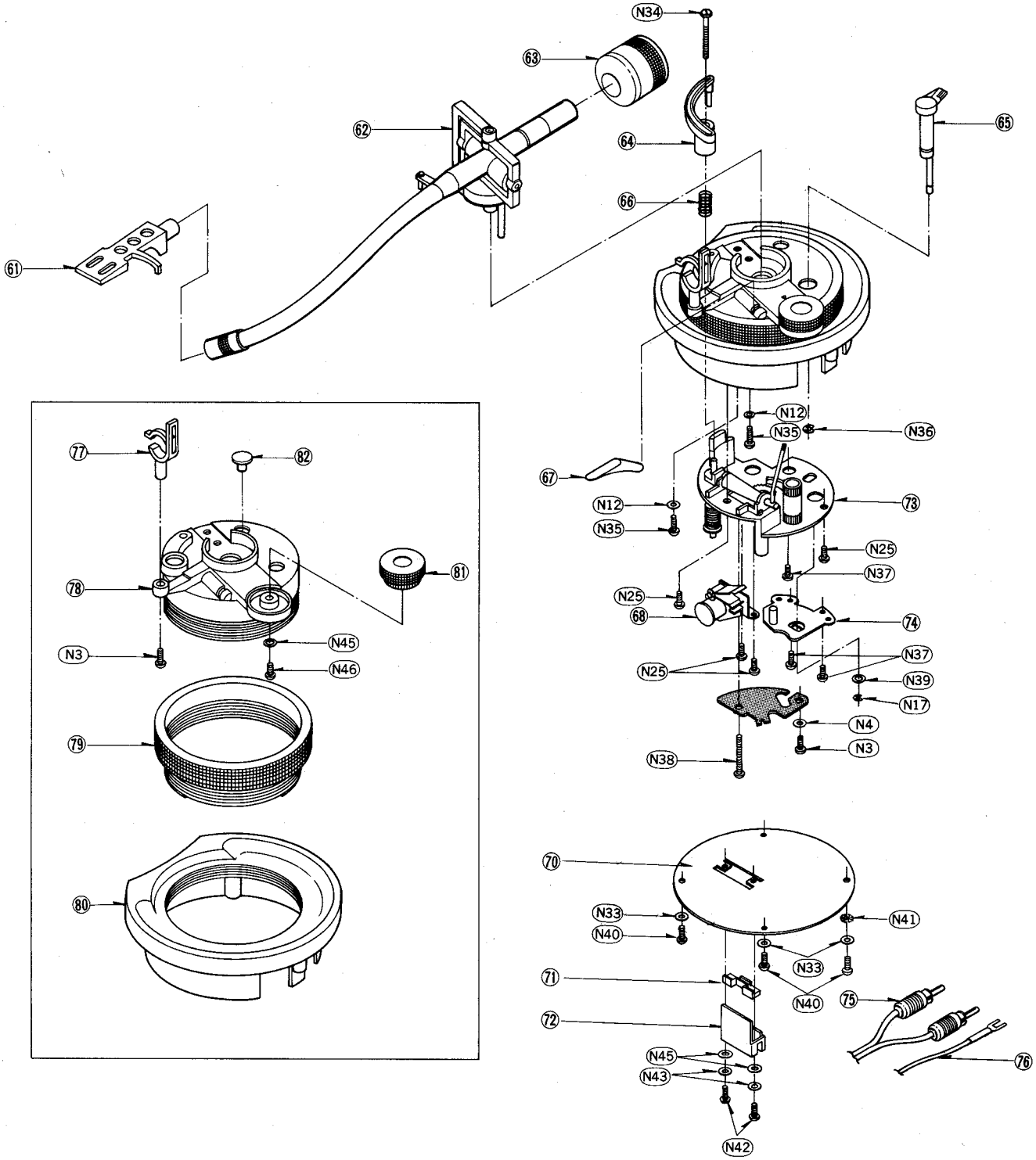

# ■ SCHEMATIC DIAGRAM

(This schematic diagram may be modified at any time with the development of new technology.)

**Notes:**

1. **S201, 202** : Speed selector switch.
2. **S203** : Start/stop switch.
3. **S301** : Pitch control reset switch in "**off**" position.
4. **S401** : Stylus illuminator switch in "**off**" position.
5. **S601** : Power switch in "**on**" position.
6. **S602** : Voltage selector in "**220 – 240**" position.
7. The voltage value, and waveforms are the reference voltage values of this unit measured by DC electronic voltmeter (high-impedance) and oscilloscope on the basis of chassis. Therefore, the voltage value and waveform may include some error due to the internal impedance of the tester or the measuring set.
   *[ ] is the voltage when turntable is in stop.
   *( ) is the voltage when turntable is in rotation. (at 33 rpm)
8. ———— +B voltage lines.
9. Important safety notice.
   Components identified by ⚠ mark have special characteristics important for safety. When replacing any of these components, use only manufacturer's specified parts.
10. The part No. of diodes mentioned in the schematic diagram stand for production part No. Regarding the part No. with ✪ mark the production part No. are different from the replacement part No. Therefore, when placing an order for replacement part, please use the part No. in the replacement parts list.

**IMPORTANT SAFETY NOTICE**

The shaded area on this schematic diagram incorporates special features important for protection from fire and electrical shock hazards.
When servicing it is essential that only manufacturer's specified parts be used for the critical components in the shaded areas of the schematic.

## • Terminal guide of transistors, diodes and IC's

| AN6675 | AN6680 | AN6682 | SVDS1RBA20F |
|---|---|---|---|
| 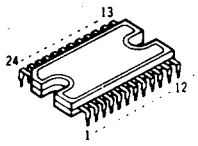 | 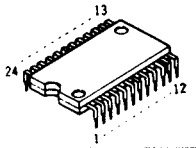 | 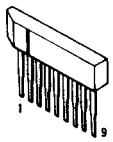 | 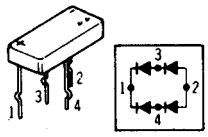 |

| MN4011B 14 Pin | 2SD1265 | MA150 |
|---|---|---|
| 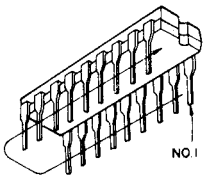 | 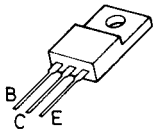 | 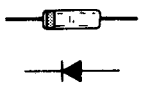 |

| 2SC1328 | 2SC1846 | 2SD637 2SB641 2SD636 2SB643 | MA1051 |
|---|---|---|---|
| 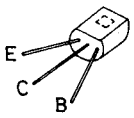 | 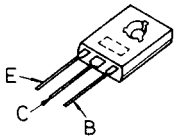 | 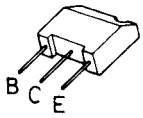 | 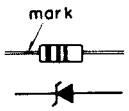 |

| SVDPR3902S-9 SVDSLH54VT3 | SVDGL-9PG2 |
|---|---|
| 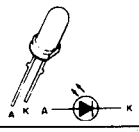 | 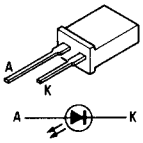 |

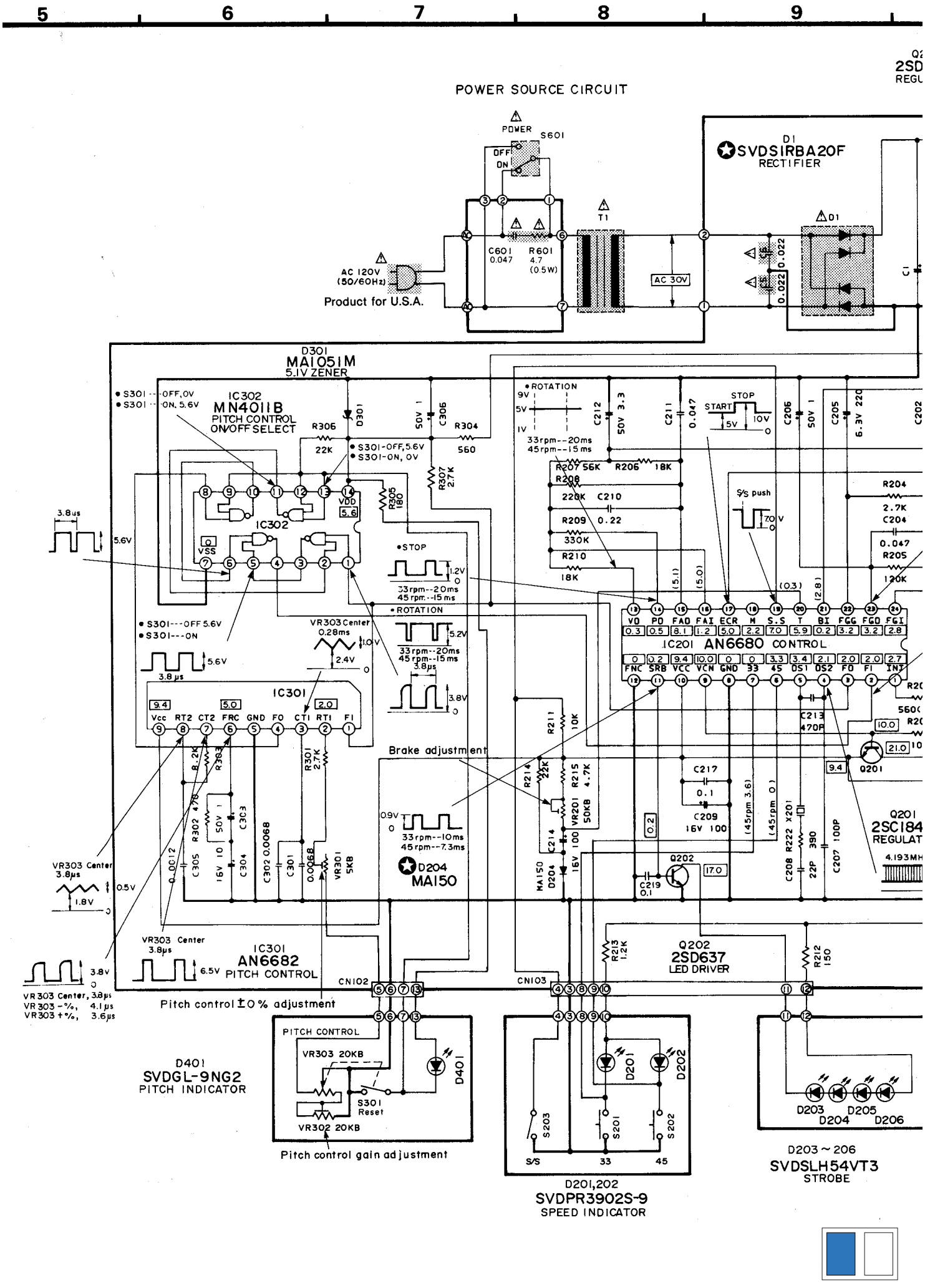
5
6
7
8
9
POWER SOURCE CIRCUIT
POWER
S601
OFF
ON
C601
0.047
R601
4.7
(0.5W)
T1
AC 120V
(50/60Hz)
Product for U.S.A.
AC 30V
D1
SVDSIRBA20F
RECTIFIER
D301
MA1051M
5.1V ZENER
IC302
MN4011B
PITCH CONTROL
ON/OFF SELECT
R306
22K
R304
560
R307
2.7K
R305
180
VDD
5.6
VSS
• S301---OFF, 0V
• S301---ON, 5.6V
• S301-OFF, 5.6V
• S301-ON, 0V
• S301---OFF 5.6V
• S301---ON
3.8us
5.6V
• STOP
• ROTATION
33rpm--20ms
45rpm--15ms
VR303 Center
0.28ms
1.0V
2.4V
3.8μs
3.8V
IC301
Vcc
RT2
CT2
FRC
GND
FO
CTI
RTI
FI
R302 470
R303 8.2K
R301 2.7K
C305 0.0012
C304 16V 10
C303 50V 1
C302 0.0068
C301 0.0068
VR301 5KB
Brake adjustment
0.9V
33rpm--10ms
45rpm--7.3ms
D204
MA150
R211 10K
R214 22K
R215 4.7K
VR201 50KB
C214 16V 100
D204 MA150
VR303 Center
3.8μs
0.5V
1.8V
VR303 Center
3.8μs
6.5V
IC301
AN6682
PITCH CONTROL
VR303 Center, 3.8μs
VR303 -%, 4.1μs
VR303 +%, 3.6μs
Pitch control ±0% adjustment
CN102
CN103
PITCH CONTROL
VR303 20KB
S301
Reset
VR302 20KB
Pitch control gain adjustment
D401
D401
SVDGL-9NG2
PITCH INDICATOR
S203
S201
S202
S/S
33
45
D201
D202
D201,202
SVDPR3902S-9
SPEED INDICATOR
D203
D204
D205
D206
D203 ~ 206
SVDSLH54VT3
STROBE
C212 50V 3.3
C211 0.047
C206 50V 1
C205 6.3V 220
C202
STOP
START
5V
10V
R207 56K
R206 18K
R208 220K
C210 0.22
R209 330K
R210 18K
S/S push
7.0V
R204 2.7K
C204 0.047
R205 120K
VD
PD
FAD
FAI
ECR
M
S.S
T
BI
FGG
FGD
FGI
IC201
AN6680
CONTROL
FNC
SRB
VCC
VCN
GND
33
45
DS1
DS2
FO
FI
INT
C213 470P
C217 0.1
C209 16V 100
C219 0.1
Q202
17.0
Q201
2SC184
REGULAT
4.193MH
R222 X201
C208 22P 390
C207 100P
R213 1.2K
Q202
2SD637
LED DRIVER
R212 150

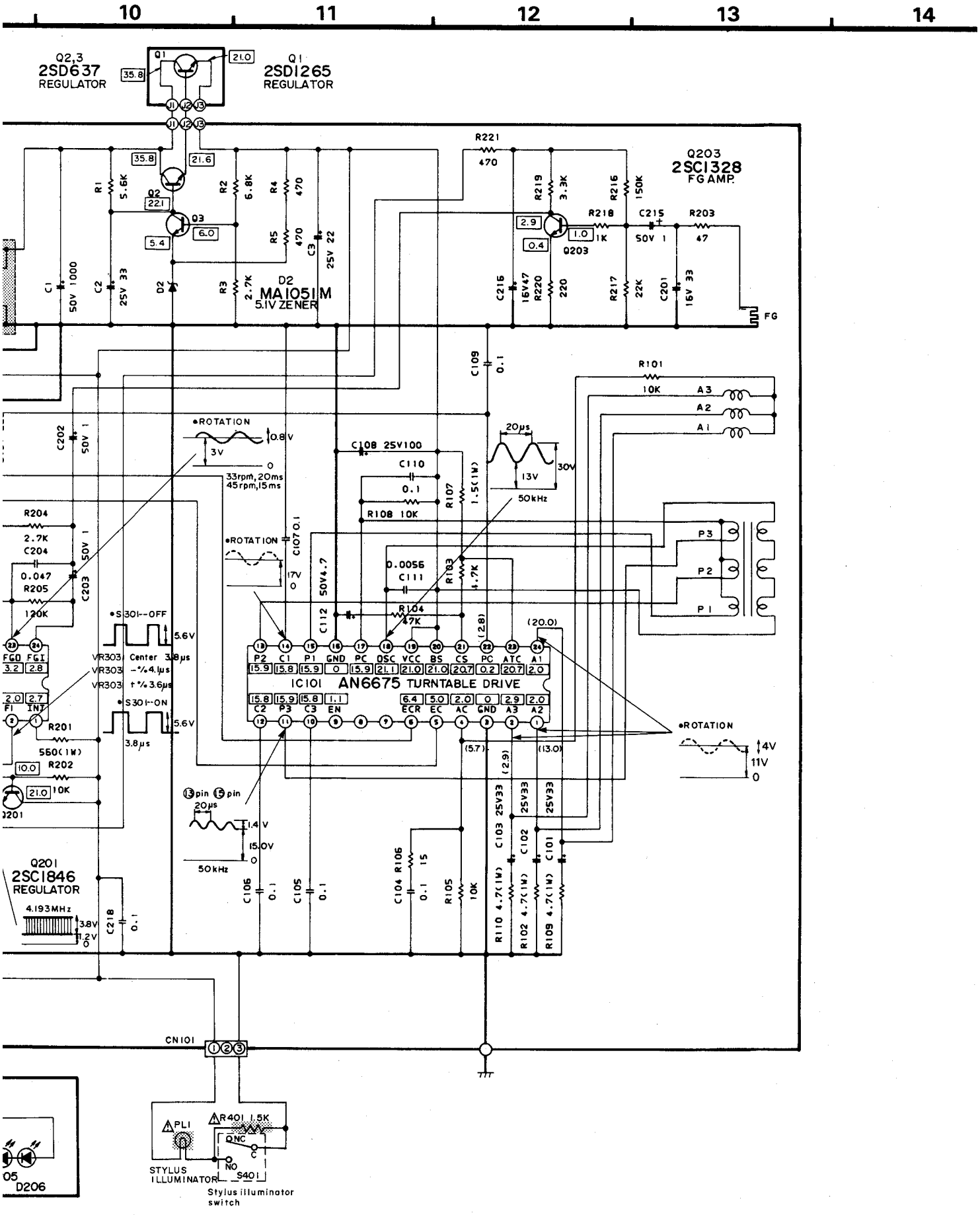
10
11
12
13
14
Q2,3
2SD637
REGULATOR
Q1
2SD1265
REGULATOR
Q203
2SC1328
FG AMP.
D2
MA1051M
5.1V ZENER
IC101 AN6675 TURNTABLE DRIVE
Q201
2SC1846
REGULATOR
4.193MHz
CN101
STYLUS ILLUMINATOR
Stylus illuminator switch
D206
FG
•ROTATION
•S301--OFF
•S301--ON
50kHz
33rpm, 20ms
45rpm, 15ms

T3

## ■ BLOCK DIAGRAM

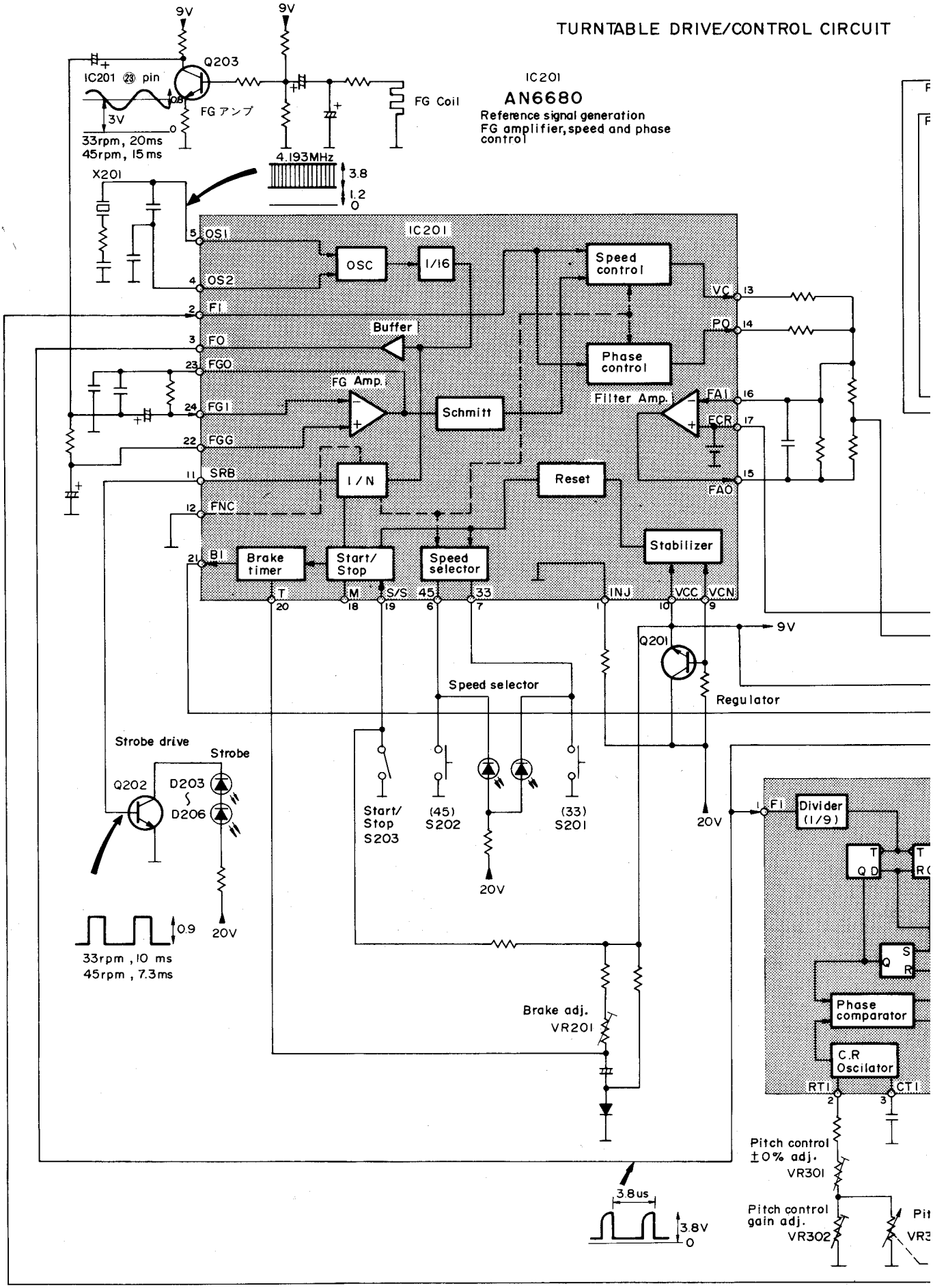

/CONTROL CIRCUIT

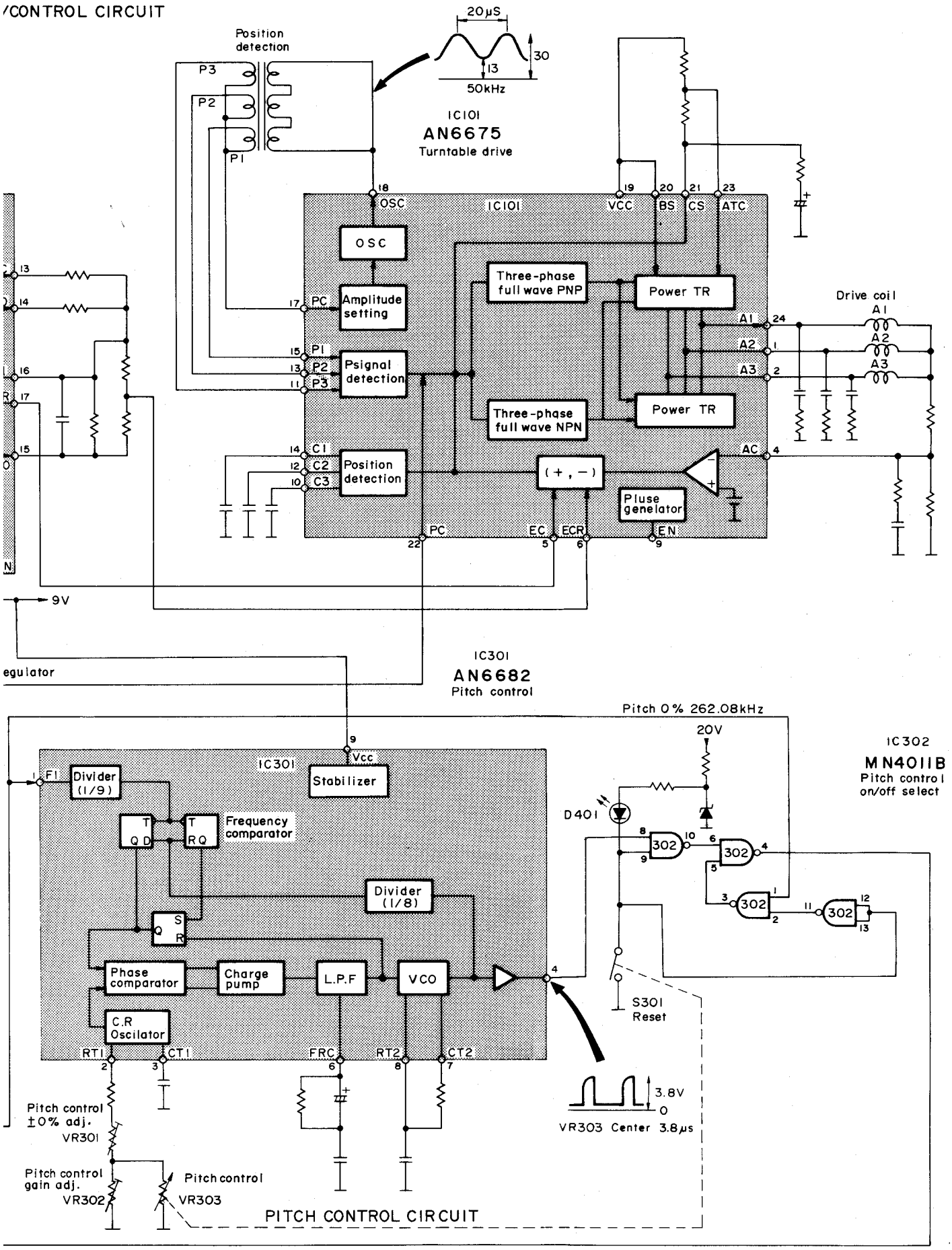

## ■ PACKING

1. Plase the unit (with cushions attached) as illustrated.
2. Fold the flaps according to the line marks.
3. Seal the top with adhesive tape.
   * Use gum tape or adhesive cloth tape of 50mm wide at least
4. For the edges, first fold the flap "a" and then flap "b", and staple. Remember to staple only flap "b". (Use 15 or 16mm staple)

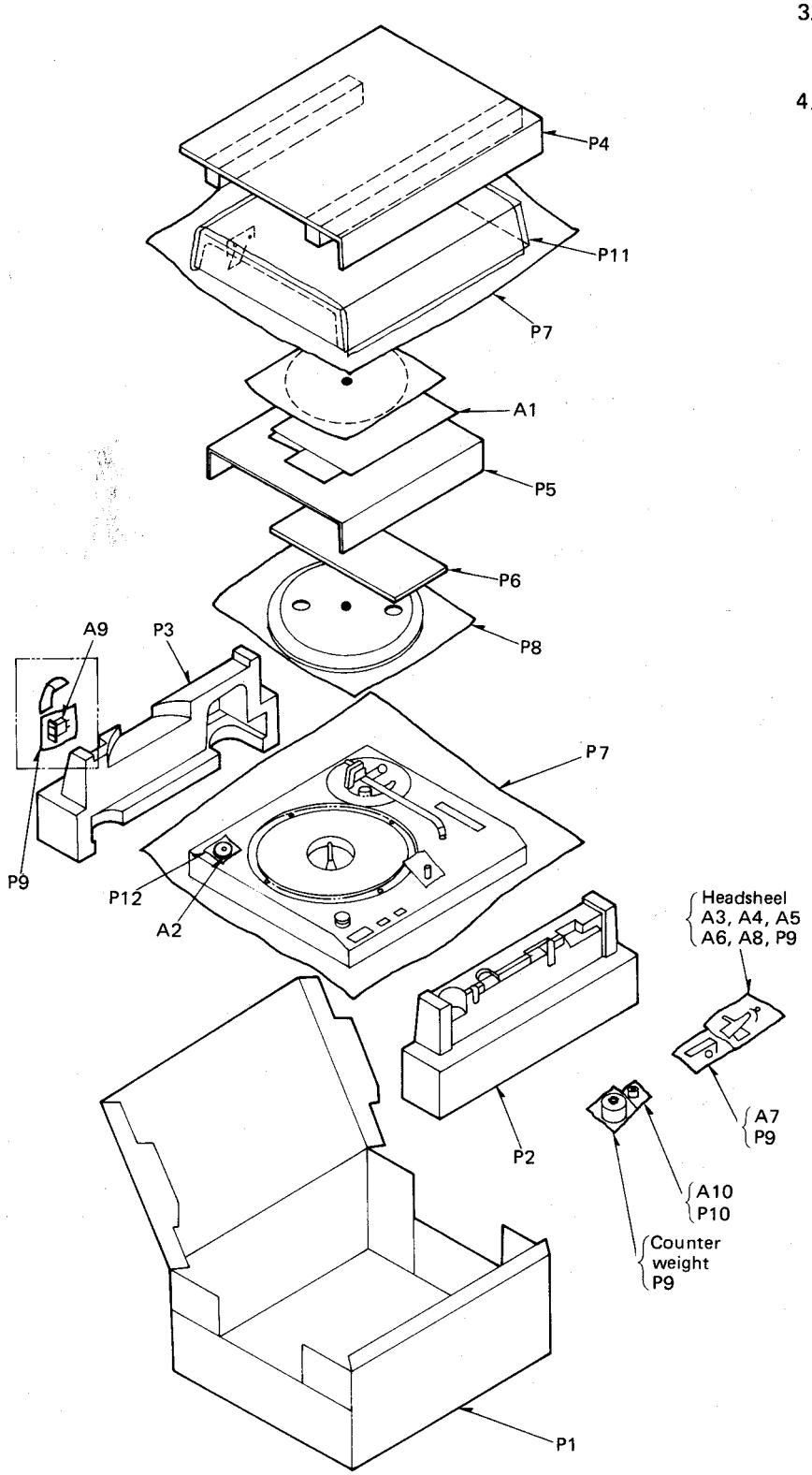


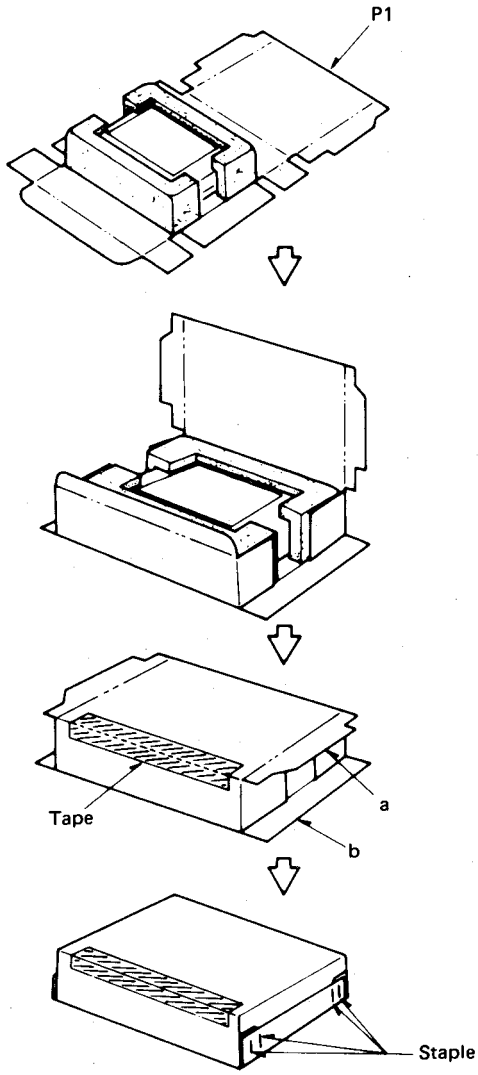


* Stapling positions are shown below.

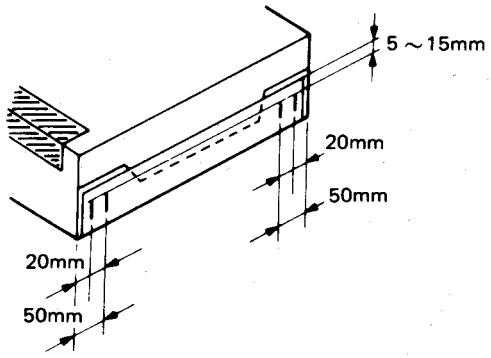

ORDER NO. SD7908-1601

800 332-3922

# Service Manual

Turntable System

## SL-1200MK2

(M), (MC)

SL-1200MK2

## ⚠ WARNING

This service literature is designed for experienced repair technicians only and is not designed for use by the general public. It does not contain warnings or cautions to advise non-technical individuals of potential dangers in attempting to service a product. Products powered by electricity should be serviced or repaired only by experienced professional technicians. Any attempt to service or repair the product or products dealt with in this service literature by anyone else could result in serious injury or death.

- The model SL-1200MK2 (M) is available in U.S.A. only.
- The model SL-1200MK2 (MC) is available in Canada only.

## SPECIFICATIONS

Specifications subject to change without notice. Weight and dimensions shown are approximate.

### General

| | |
|---|---|
| **Power supply:** | 120 V, AC, 50 or 60 Hz |
| **Power consumption:** | 12 W |
| **Dimensions: (W x H x D)** | 45.3 x 16.2 x 36 cm (17-27/32"x6-19/64"x14-11/64") |
| **Weight:** | 11 kg (24.3 lb) |

### Turntable section

| | |
|---|---|
| **Type:** | Quartz direct drive<br>Manual turntable |
| **Drive method:** | Direct drive |
| **Motor:** | Brushless DC motor |
| **Turntable platter:** | Aluminum diecast<br>Diameter 33.2 cm (13-5/64")<br>Weight 2 kg (4.4 lb.) |
| **Turntable speeds:** | 33-1/3 rpm and 45 rpm |
| **Pitch control:** | All quartz-locked ±8% range |
| **Starting torque:** | 1.5 kg·cm (1.3 lb·in) |
| **Build-up characteristics:** | 0.7 s. from standstill to 33-1/3 rpm |
| **Braking system:** | Electronic brake |
| **Speed change due to load torque:** | 0% within 1.0 kg·cm (0.87 lb·in) |
| **Wow and flutter:** | 0.01% WRMS*<br>0.025% WRMS (JIS C5521)<br>±0.035% peak (IEC 98A Weighted) |

* This rating refers to turntable assembly alone, excluding effects of record, cartridge or tonarm, but including platter. Measured by obtaining signal from built-in frequency generator of motor assembly.

| | |
|---|---|
| **Rumble:** | –56 dB (IEC 98A Unweighted)<br>–78 dB (IEC 98A Weighted) |

### Tonearm section

| | |
|---|---|
| **Type:** | Universal |
| **Effective length:** | 230mm (9-1/16") |
| **Arm height adjustment range:** | 31.8–37.8 mm (helicoid part 6 mm)<br>(1-21/32"–3-35/64")<br>(helicoid part 15/64") |
| **Overhang:** | 15 mm (19/32") |
| **Effective mass:** | 12 g (without cartridge) |
| **Offset angle:** | 22° |
| **Friction:** | Less than 7 mg (lateral, vertical) |
| **Tracking error angle:** | Within 2°32' (at the outer groove of 30 cm (12") record<br>Within 0°32' (at the inner groove of 30 cm (12") record |
| **Stylus pressure adjustment range:** | 0–2.5 g |
| **Applicable cartridge weight range:** | 6–10 g |
| **(with auxiliary weight):** | 13.5–17.5 g (including headshell)<br>9.5–13 g |
| **(with shell weight):** | 17–20.5 g (including headshell)<br>3.5–6.5 g<br>11–14 g (including headshell) |
| **Headshell weight:** | 7.5 g |

© Matsushita Electric Industrial Co. Ltd.
All rights reserved. Unauthorized copying and distribution is a violation of law

Technics

**Panasonic Company Division of Matsushita Electric Corporation of America**
One Panasonic Way, Secaucus, New Jersey 07094

**Panasonic Hawaii, Inc.**
320 Waiakamilo Road, Honolulu, Hawaii 96817

**Matsushita Electric of Canada Ltd.**
5770 Ambler Drive, Mississauga, Ontario L4W 2T3

## ■ CONTENTS


DISASSEMBLY PROCEDURE ..... 2, 3
PARTS IDENTIFICATIONS ..... 3
ARM BASE ASSEMBLING PROCEDURE ..... 4
FEATURES ..... 5
ADJUSTMENTS ..... 6
SCHEMATIC DIAGRAM ..... 7, 8
REPLACEMENT PARTS LIST (Electrical) ..... 9
TROUBLE SHOOTING ..... 10
PRINTED CIRCUIT BOARD ..... 11, 12
ADJUSTMENT (Electrical) ..... 13
REFERENCE VOLTAGE AND WAVEFORM AT EACH IC PIN ..... 13, 14
BLOCK DIAGRAM ..... 15, 16
EXPLODED VIEWS ..... 17, 18
REPLACEMENT PARTS LIST (Mechanical) ..... 19
EXPLODED VIEWS ..... 20


## ■ DISASSEMBLY PROCEDURE

### How to remove panel cover

1. Remove head shell and turntable.
2. Secure arm with arm clamp.
3. Remove 5 screws Ⓐ of the panel cover as shown in Fig. 1.

### How to remove stater frame coil and F.G detector coil

4. Remove 3 connectors Ⓑ and 2 read wires Ⓒ from power transformer as shown in Fig. 2.
5. Remove 3 screws Ⓓ of the drive circuit board and 3 screws Ⓔ of the stater frame cover as shown in Fig. 2.
6. Disconnect 18 soldered parts Ⓕ of the stater coil and 4 soldered parts Ⓖ of the F.G detector coil as show in Fig. 3.
7. Remove 3 screws Ⓗ of the stater frame ass'y as shown in Fig. 3.

### How to remove bottom base ass'y

8. Remove 4 audio insulators. **(Counterclockwise rotation)**
9. Remove 17 screws and spacer Ⓘ as show in Fig. 4.
10. Remove 11 screws Ⓙ as shown in Fig. 4.

### How to remove stylus-illuminator lamp

11. Remove 2 screws Ⓚ of the stylus-illuminator lamp ass'y as shown in Fig. 5.
12. Remove 1 screw Ⓛ as shown in Fig. 6.

### How to remove neon-illuminator L.E.D.

13. Remove 4 screws Ⓜ as shown in Fig. 5.
14. Remove 1 circlip Ⓝ and switch cam Ⓞ as shown in Fig. 5.
15. Remove strobo-illuminator case.

### How to remove tone arm

16. Remove 4 screws Ⓟ of the arm base cover as shown in Fig. 5.
17. Remove 2 screws Ⓠ of the phono cord clamper as shown in Fig. 5.
18. Remove phono cord clamper as shown in Fig. 7.
19. Remove 2 screws Ⓡ of the phono cord p.c.b. as shown in Fig. 8.
20. Remove 2 screws Ⓢ as shown in Fig. 8.
21. Remove 2 screws Ⓣ of the silicon oil dumper as shown in Fig. 8.
22. Remove 3 screws Ⓤ as shown in Fig. 8.
23. Remove 2 screws Ⓧ of the tone arm as shown in Fig. 9.

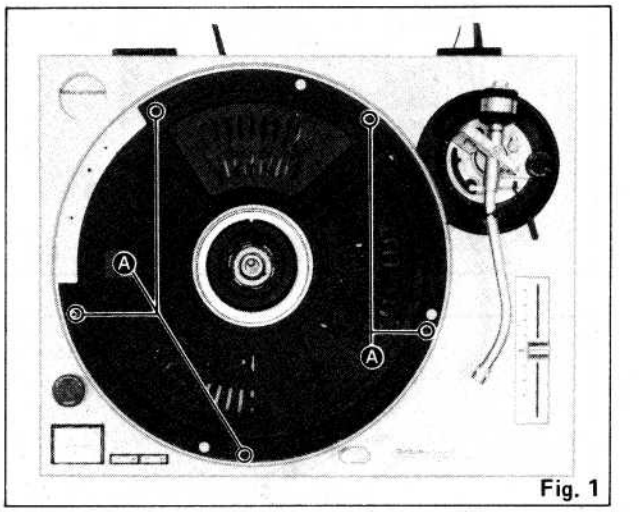

Fig. 1

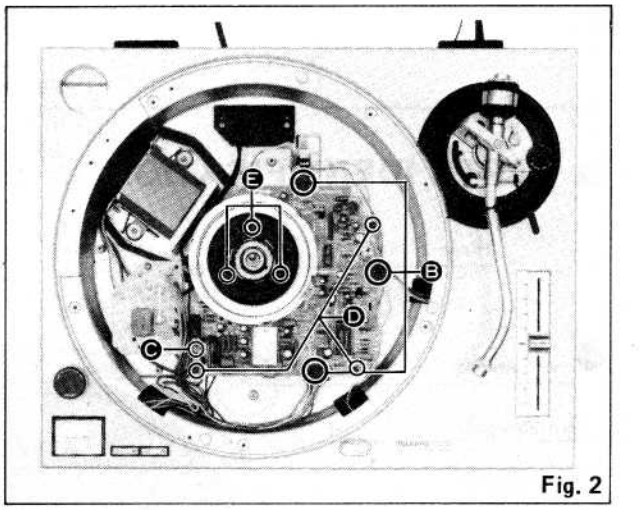

Fig. 2

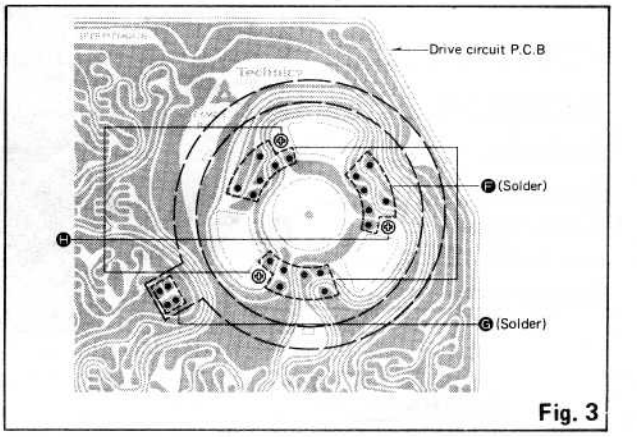

Fig. 3

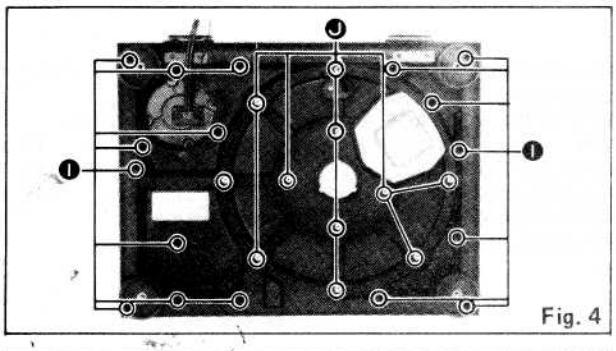

Fig. 4

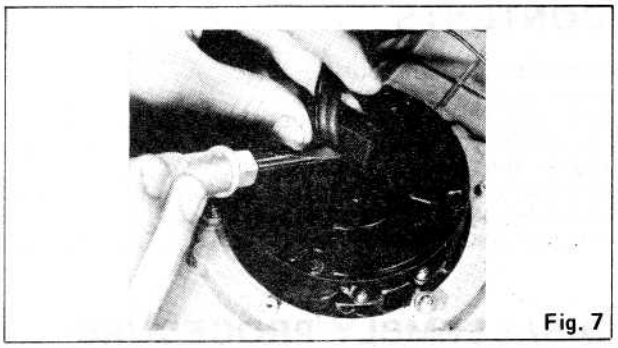
Fig. 7

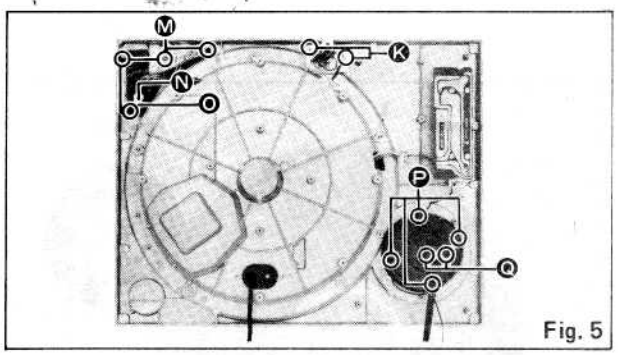

Fig. 5

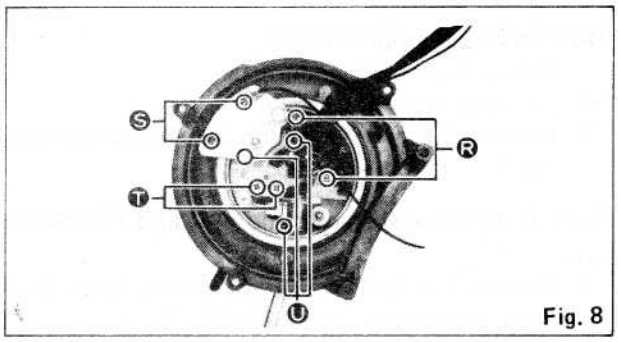

Fig. 8

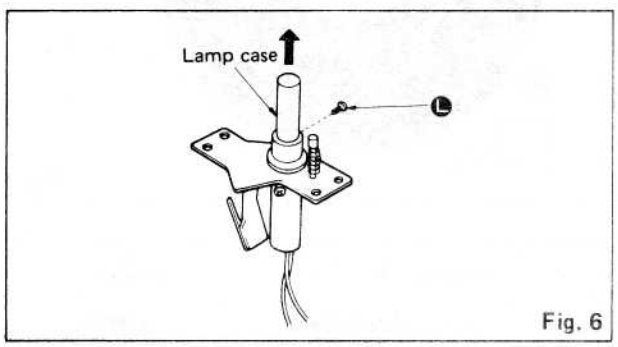

Fig. 6

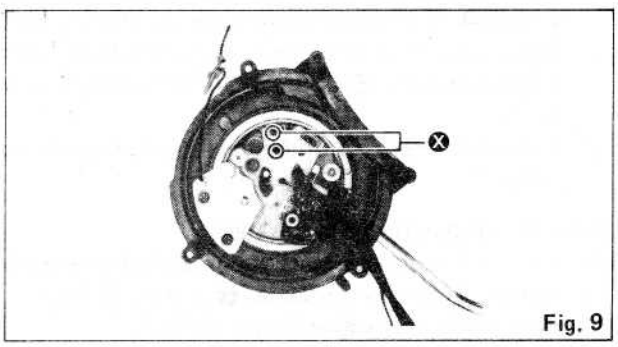

Fig. 9

## ■ PARTS IDENTIFICATION

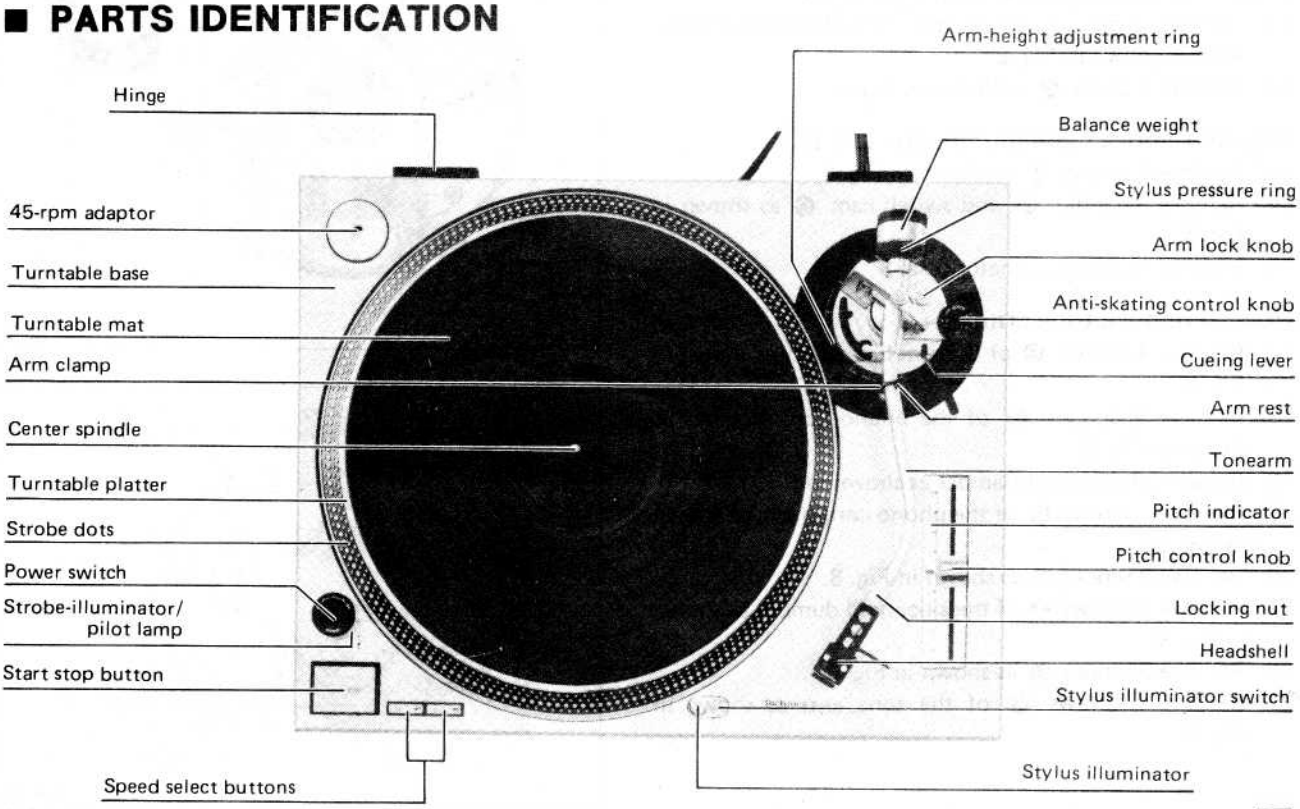

Fig. 10



## ■ ARM

1. Att
con
2. Con
1.5-

Op

3. Hol
base
cloc
**Not**
Tak
posi

4. Adj
base
secu
(See

## ■ ARM BASE ASSEMBLING PROCEDURE

1. Attach the control ring to the arm base seat. (The control ring should be roated counterclockwise.)
2. Completely tighten the control ring, and then loosen it 1.5~2.5 turns to set the scale to "3". (See Fig. 11)

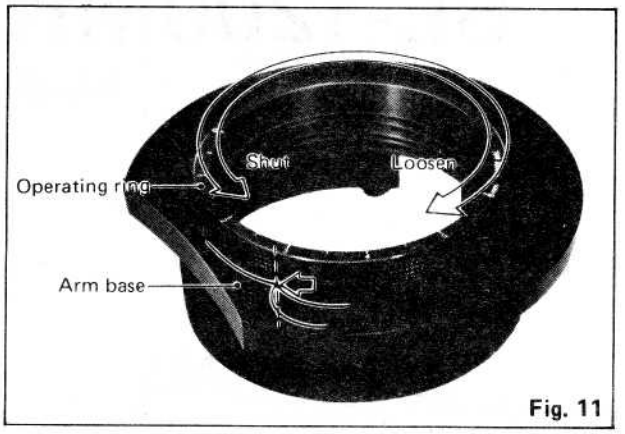

Fig. 11

3. Hold the arm base and set the red line mark on the arm base to the scale near "2", then turn the arm base clockwise. (See Fig. 12)

   **Note:**
   Take care not to allow deflection of the predetermined positions of the control ring and arm base seat.

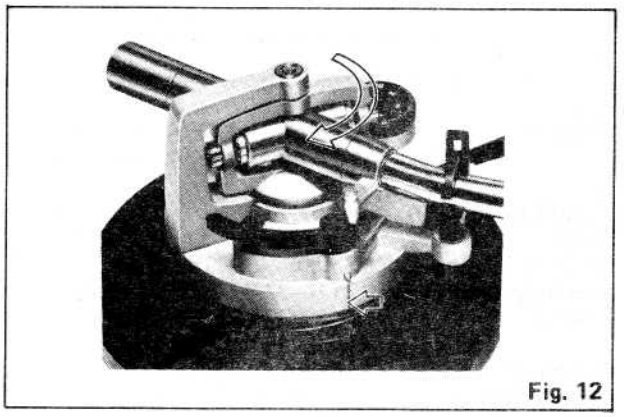
Fig. 12

4. Adjust the arm base so that the red line mark on the arm base is set to the scale "3" of the control ring. Next, secure the positioning base plate with two setscrews. (See Fig. 13)

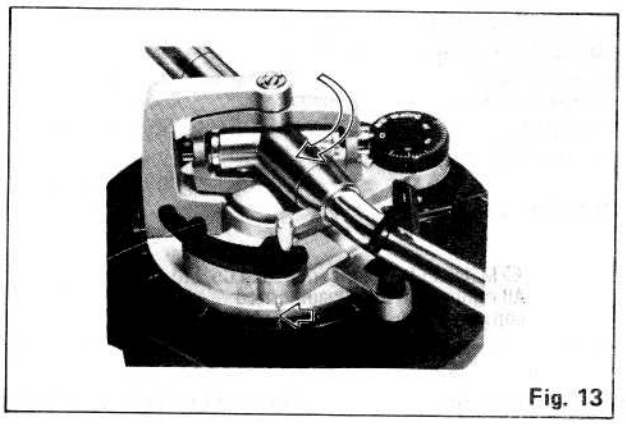
Fig. 13

5. Rotate the control ring and make sure that the arm base shifts within the range of 0~6mm. (See Figs. 14 and 15) If it does not shift within the specified range, the arm base position is deflected. In that case, disassemble the parts and check as specified in step 3.

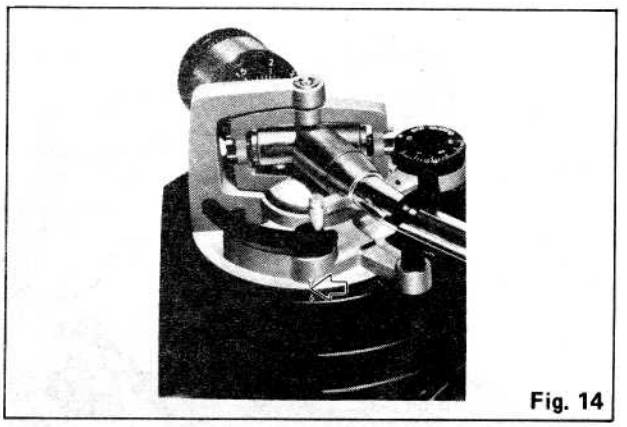
Fig. 14

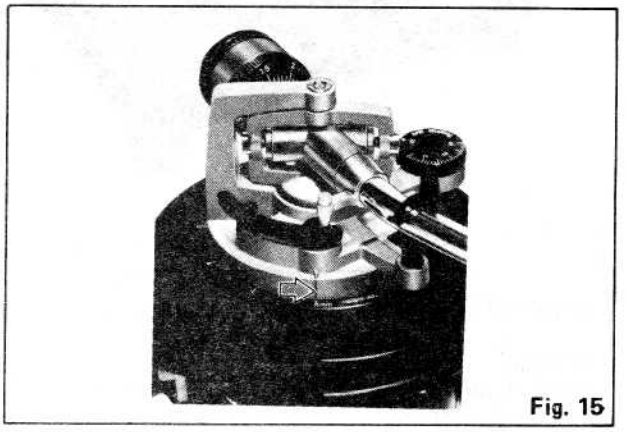
Fig. 15

## ■ ADJUSTMENT OF CANCELLER SPRING POSITION

If the arm body or PU base plate is replaced, be sure to set the canceller knob to "0.5" and make sure that the canceller spring is in contact with the arm shaft. (See Fig. 16) If the canceller spring is deflected, adjust it as follows:

1. Clamp the arm on the rest.
2. Set the canceller knob to "0.5".
3. Remove the PU base plate, adjust gear Ⓐ so that the canceller spring is in the position of Fig. 16.
4. Mount the PU base plate onto the arm base and check the spring position.

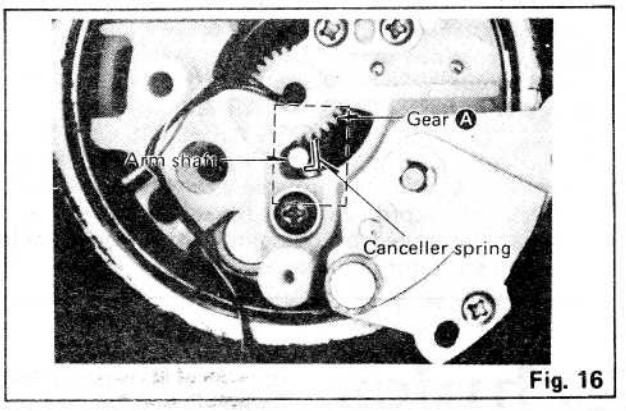

Fig. 16

## ■ FEATURES

### Total quartz locked continuous pitch adjustment ±8%

Quartz-phase-locked control means almost perfect accuracy of turntable rotation.

But with most quartz turntables, this accurate control circuit must be cut out when the pitch control is employed. With the SL-1200MK2, however, pitch is variable continuously (analogically) by up to ±8% under total quartz-locked control. The pitch is controlled with a large sliding lever, located to the right of the turntable platter.

Four lines of platter markings are also provided indicating +6%, +3.3%, 0% (exact rated speed) and −3.3% change from rated speed.

### Aluminum diecast cabinet and special heavy rubber base material provide acoustic isolation

The effects of external vibrations are dramatically reduced in the turntable by this new turntable construction.

The turntable base is precision-made aluminum diecast. And the underside of the main base is made of a heavy rubber material (special one-piece molding) which has excellent vibration resistance and absorbing characteristics. The turntable platter is also vibration-damped with specially fabricat rubber matting in the underside along with the thick turntable sheet (rubber mat). Four large-size insulating feet also help to absorb unwanted vibrations.

These features make SL-1200MK2 ideal for use with extra-high sound pressure levels.

### High torque for fast starts

The integral rotor/platter motor delivers 1.5kg·cm (1.3lb·in) starting torque. This high torque gives very quick starts enabling the platter to reach 33-1/3 rpm within 0.7 s. (a quarter of a turn). This is a big advantage in many professional applications where fast cueing is a necessity.

### Stylus illuminator for low-light conditions

You'll appreciate the stylus illuminator when you are using the turntable under low-light conditions. The illuminator can be hidden in the turntable base, should you need it, simply push a button and it will pop up gently and cast a beam of light across the disc in the area traversed by the tonearm.

You can then clearly see the spaces between the selections on the record, and cue the arm exactly where you want it. The illuminator can then be pushed back down into the base.

### High sensitivity, low mass, gimbal suspension tonearm

The highly sensitive tonearm features a genuine gimbal suspension, the rotational center of which is precisely defined at one point. Bearings are finished to a tolerance of ±0.5 microns. This and the extra-closeness of pivot center to the bearings, result in the minimal friction of 7 mg (0.007 g) for both horizontal and vertical movement. Add to this the low 12-gram effective tonearm mass (including headshell, without cartridge) and you have a tonearm compatible with the wide range of compliances found in today's cartridges. If you choose a popular high compliance MM cartridge, the low range resonance frequency will appear in the correct area to avoid warp frequencies of records, but without entering the low end of the audio spectrum. This tonearm is provided with a computer designed, light-weight, high-rigidity headshell made of single-piece diecast aluminum to resist partial vibration. The universal design allows headshell interchangeability. Contacts are gold-plated.

### Helicoid tonearm height adjustment

Arm height is adjustable within a range of 6 mm to accommodate varying cartridge dimensions. Adjustments are done with a precision-made helicoid.

### Other fine features

- Quick stops are achieved with a fully electronic braking system.
- A strobe illuminator is provided. The stroboscope is controlled by the extremely stable quartz oscillator, rather than potentially unstable AC line frequency.
- Power on/off control built-into strobe illuminator for ease-of-operation.
- Soft-touch start·stop switch allowing precision control capability without the annoyance of accidental operation.
- Technics integral rotor/platter motor construction with full cycle detection FG.

**Cross section of SL-1200MK2**

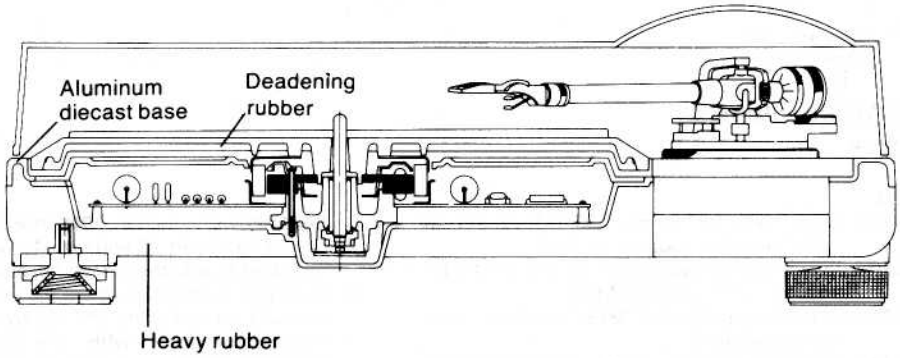


Fig. 17

lections
want it.
nto the

ension

gimbal
recisely
ance of
t center
f 7 mg
nt. Add
cluding
m com-
today's
ce MM
pear in
rds, but
m. This
-weight,
minum
s head-

accom-
re done

braking

is con-
, rather

tor for

control
eration.
on with

ig. 17



# ■ ADJUSTMENTS

## Pitch control (fine adjustment of speed) (See Figs. 18 and 19.)

When the pitch control knob is located at the center of the position after turning on the power, the green LED indicator is lit showing the operating condition for the predetermined speed (either 33-1/3 or 45 rpm). The pitch control is variable in a range of 0~±8%.

Adjustment should be done on the basis of indicator scale. Figures on the indicator show approximate percentages for variable pitch control.

When the strobe dots in 4 stages marked at the peripheral edge of the turntable appear to be stationary, variation of individual pitches is shown. **(See Fig. 19.)**

**Note:**

The strobe-illumination of this unit employs a strobe-illuminator LED synchronized with the precise quartz frequency.

For fine adjustment of the turntable speed, be sure to effect the adjustment according to the LED illumination.

The LED illumination is not synchronized with fluorescent lamps.

## Adjustment of arm-lift height (See Figs. 20 and 21.)

The arm-lift height (distance between the stylus tip and record surface when cueing lever is raised) has been adjusted at the factory before shipping to approximately 8-13mm.

If the clearance becomes too narrow or too wide, turn the adjustment screw clockwise or counterclockwise, while pushing the arm lift down.

**Clockwise rotation**

—distance between the record and stylus tip is decreased.

**Counterclockwise rotation**

—distance between the record and stylus tip is increased.

**Note:**

As the adjusting screw has hexagonal head, be sure to make the adjustment while depressing the arm lift, or the screw will not move freely.

Also be sure that the hexagonal head retracts correctly into the arm lift when the latter is released.

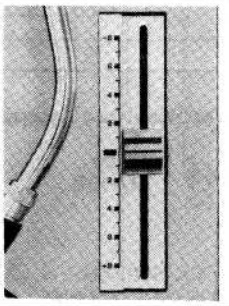

Fig. 18

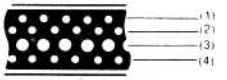


(1) appears stationary at the pitch of +6%
(2) appears stationary at the pitch of +3.3%
(3) appears stationary at the pitch of 0%
(4) appears stationary at the pitch of −3.3%

Fig. 19

## Adjustment of the tonearm height (See Fig. 22.)

The height of the tonearm can be adjusted up to 6 mm, and a scale is provided on the adjust ring in 0.5 mm increments. Be sure to set the proper arm height using the adjust ring scale and referring to the table.

| Height of cartridge (mm) (H) | Scale reading on the arm-height adjust ring |
|---|---|
| 15 | 0 |
| 16 | 1 |
| 17 | 2 |
| 18 | 3 |
| 19 | 4 |
| 20 | 5 |
| 21 | 6 |

For example, if the cartridge height is 17.5 mm, the arm-height adjust ring should be positioned at the intermediate location between 2 and 3 on the scale. **(See Fig. 22.)**

**Caution:**

Be sure to lock the tonearm by turning the arm lock knob in the direction indicated by the arrow after finishing the height adjustment for the tonearm.

**Lubrication (See Fig. 23.)**

Apply 2 or 3 drops of oil once after every 2000 hours of operation.

The time interval is much longer than that for conventional type motors (200-500 hours).

Please purchase original oil. **(Part number is SFWO 010.)**

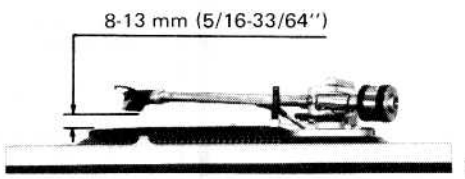


Fig. 20

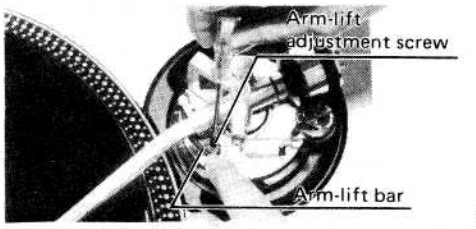


Fig. 21

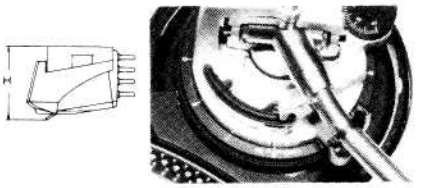

Fig. 22

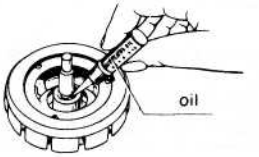


Fig. 23

# Schematic Diagram (This schematic diagram may be modified at any time with the development of

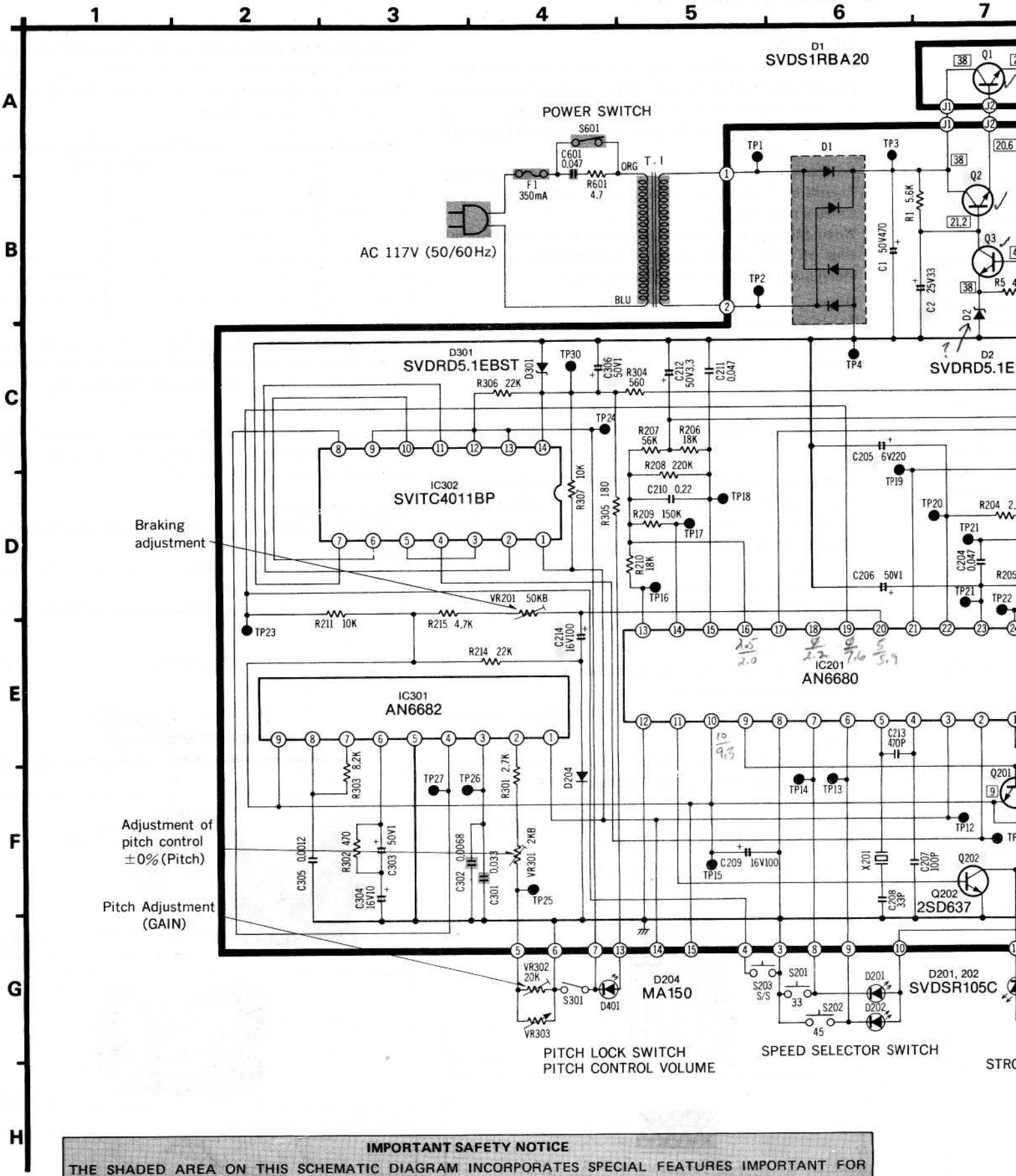


**IMPORTANT SAFETY NOTICE**

THE SHADED AREA ON THIS SCHEMATIC DIAGRAM INCORPORATES SPECIAL FEATURES IMPORTANT FOR SAFETY.
WHEN SERVICING IT IS ESSENTIAL THAT ONLY MANUFACTURER SPECIFIED PARTS BE USED FOR THE CRITICAL COMPONENTS IN THE SHADED AREAS OF THE SCHEMATIC.

e development of new technology.)

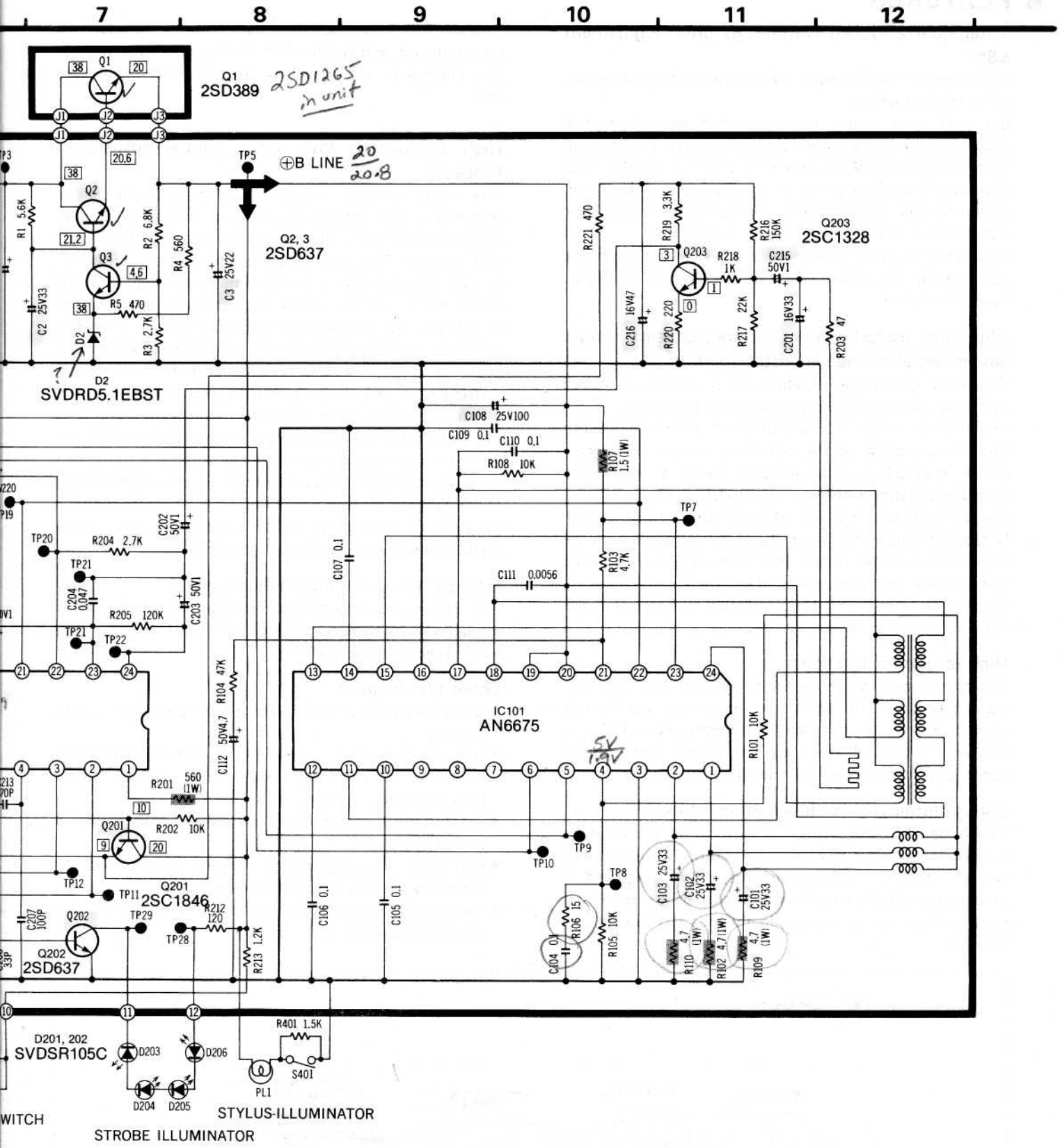


**NOTO:**

1. **S201:** Speed selector switch (33-1/3 r.p.m.) in "**ON**" position. (push condition)
2. **S202:** Speed selector switch (45 r.p.m.) in "**OFF**" position. (not-push condition)
3. **S203:** Start/Stop switch in "**OFF**" position. (not-push condition)
4. **S301:** Pitch lock switch in "**ON**" position. (center position)
5. **S401:** Stylus-illuminator switch in "**OFF**" position.
6. **S601:** Power switch in "**ON**" position.
7. The drive circuit IC voltage and wave form are not indicated in side the schematic diagram.
8. Indicated voltage values are the standard values for the unit measured by DC electronic circuit tester (high impedance) with the chassis taken as standard. Therefore, there may exist some errors in the voltage values, depending on the internal impedance of the DC circuit tester.

# ■ REPLACEMENT PARTS LIST (Electrical)

**Notes:** 1. Part numbers are indicated on most mechanical parts.
Please use this part number for parts orders.
2. ⚠ indicates that only parts specified by manufacturer be used for safety.
3. SL-1200MK2(M) → [M], SL-1200MK2 (MC) → [MC]

| Ref. No. | | Part No. | Part Name & Description |
|---|---|---|---|
| **INTEGRATED CIRCUITS** | | | |
| IC101 | | AN6675 | Integrated Circuit |
| IC201 | | AN6680 | Integrated Circuit |
| IC301 | | AN6682 | Integrated Circuit |
| IC302 | | SVITC4011BP | Integrated Circuit |
| **TRANSISTORS** | | | |
| Q1 | | 2SD389A-Q | Transistor |
| Q2, 3, 202 | | 2SD637 | Transistor |
| Q201 | | 2SC1846-R | Transistor |
| Q203 | | 2SC1328-T | Transistor |
| **DIODES** | | | |
| D1 | ⚠ | **SVDS1RBA40** | Rectifier |
| D2, 301 | | **MA1051** | Diode, Zener 5.1V |
| D204 | | **MA162A** | Diode |
| D201, 202 | | SVDSR-105C | Light Emitting Diode |
| D203~206 | | SVDEBR5505S | Light Emitting Diode |
| D401 | | SVDGL-9PG2 | Light Emitting Diode |
| **CRYSTAL** | | | |
| X201 | | SVQU306115 | Crystal, 4.19328MHz Oscillator |
| **VARIABLE RESISTORS** | | | |
| VR201 | | EVLS6AA00B54 | Braking Adjustment (BRAKE), 50kΩ (B) |
| VR301 | | EVMH2GA00B53 | Adjustment of Pitch Control ±0%(PITCH), 5kΩ (B) |
| VR302 | | EVLS6AA00B54 | Pitch Adjustment (Gain) 50kΩ |
| VR303 | | EVBJ05C19ABE | Pitch Control Volume |
| **SWITCHES** | | | |
| S201 | | EVQP5R04K | Switch, Speed Selector (33-1/3 r.p.m.) |
| S202 | | EVQP5R04K | Switch, Speed Selector (45 r.p.m.) |
| S203 | | SFDSSS5GL13C | Switch, Start/Stop |
| S401 | | SFDSD2MSL-4 | Switch, Stylus-illuminator |
| S601 | ⚠ | SFDSSS5GL-2 | Switch, Power |
| **LAMP** | | | |
| PL1 | | SFDN122-01 | Lamp, Stylus-illuminator |
| **TRANSFORMER** | | | |
| T1 | ⚠ | SLT60EU7B | Power Transformer |
| **FUSE** | | | |
| F1 | ⚠ | XBA2F03NU100 | Fuse, 350mA |
| **RESISTORS** | | | |
| R1 | | **ERD25FJ562** | Carbon, 5.6kΩ, 1/4W, ± 5% |
| R2 | | **ERD25FJ682** | Carbon, 6.8kΩ, 1/4W, ± 5% |
| R3 | | **ERD25FJ272** | Carbon, 2.7kΩ, 1/4W, ± 5% |
| R4 | | **ERD25FJ561** | Carbon, 560Ω, 1/4W, ± 5% |
| R5 | | **ERD25FJ471** | Carbon, 470Ω, 1/4W, ± 5% |
| R101 | | **ERD25FJ103** | Carbon, 10kΩ, 1/4W, ± 5% |
| R102 | ⚠ | ERX1ANJ4R7 | Metal Film, 4.7Ω, 1W, ± 5% |
| R103 | | **ERD25FJ472** | Carbon, 4.7kΩ, 1/4W, ± 5% |
| R104 | | **ERD25TJ473** | Carbon, 47kΩ, 1/4W, ± 5% |
| R105 | | **ERD25FJ103** | Carbon, 10kΩ, 1/4W, ± 5% |
| R106 | | **ERD25FJ150** | Carbon, 15Ω, 1/4W, ± 5% |
| R107 | ⚠ | ERX1ANJ1R5 | Metal Film, 1.5Ω, 1W, ± 5% |
| R108 | | **ERD25FJ103** | Carbon, 10kΩ, 1/4W, ± 5% |
| R109, 110 | ⚠ | ERX1ANJ4R7 | Metal Film, 4.7Ω, 1W, ± 5% |
| R201 | ⚠ | ERG1ANJ561 | Metal Oxide, 560Ω, 1W, ± 5% |
| R202 | | **ERD25FJ103** | Carbon, 10kΩ, 1/4W, ± 5% |
| R203 | | **ERD25FJ470** | Carbon, 47Ω, 1/4W, ± 5% |
| R204 | | **ERD25FJ272** | Carbon, 2.7kΩ, 1/4W, ± 5% |
| R205 | | **ERD25TJ124** | Carbon, 120kΩ, 1/4W, ± 5% |
| R206 | | **ERD25TJ183** | Carbon, 18kΩ, 1/4W, ± 5% |
| R207 | | **ERD25TJ563** | Carbon, 56kΩ, 1/4W, ± 5% |
| R208 | | **ERD25TJ224** | Carbon, 220kΩ, 1/4W, ± 5% |
| R209 | | **ERD25TJ154** | Carbon, 150kΩ, 1/4W, ± 5% |
| R210 | | **ERD25TJ183** | Carbon, 18kΩ, 1/4W, ± 5% |
| R211 | | **ERD25FJ103** | Carbon, 10kΩ, 1/4W, ± 5% |
| R212 | | **ERD25FJ121** | Carbon, 120Ω, 1/4W, ± 5% |
| R213 | | **ERD25FJ122** | Carbon, 1.2kΩ, 1/4W, ± 5% |
| R214 | | **ERD25TJ223** | Carbon, 22kΩ, 1/4W, ± 5% |
| R215 | | **ERD25FJ472** | Carbon, 4.7kΩ, 1/4W, ± 5% |
| R216 | | **ERD25TJ154** | Carbon, 150kΩ, 1/4W, ± 5% |
| R217 | | **ERD25TJ223** | Carbon, 22kΩ, 1/4W, ± 5% |
| R218 | | **ERD25FJ102** | Carbon, 1kΩ, 1/4W, ± 5% |
| R219 | | **ERD25FJ332** | Carbon, 3.3kΩ, 1/4W, ± 5% |
| R220 | | **ERD25FJ221** | Carbon, 220Ω, 1/4W, ± 5% |
| R221 | | **ERD25FJ471** | Carbon, 470Ω, 1/4W, ± 5% |
| R301 | | ERO25CKF3301 | Metal Film, 3.3kΩ, 1/4W, ± 1% |
| R302 | | **ERD25FJ471** | Carbon, 470Ω, 1/4W, ± 5% |
| R303 | | **ERD25FJ822** | Carbon, 8.2kΩ, 1/4W, ± 5% |
| R304 | | **ERD25FJ152** | Carbon, 1.5kΩ, 1/4W, ± 5% |
| R306 | | **ERD25TJ223** | Carbon, 22kΩ, 1/4W, ± 5% |
| R601 | | **ERD25FJ4R7** | Carbon, 4.7Ω, 1/4W, ± 5% |
| **CAPACITORS** | | | |
| C1 | | **ECEB1HS471** | Electrolytic, 470μF, 50V |
| C2 | | **ECEA1VS330** | Electrolytic, 33μF, 35V |
| C3 | | **ECEA1ES220** | Electrolytic, 22μF, 25V |
| C101, 102 | | **ECEA1VS330** | Electrolytic, 33μF, 35V |
| C103 | | **ECEA1VS330** | Electrolytic, 33μF, 35V |
| C104, 105 | | ECQM1H104KZ | Polyester, 0.1μF, 50V, ±10% |
| C106, 107 | | ECQM1H104KZ | Polyester, 0.1μF, 50V, ±10% |
| C108 | | **ECEA1ES101** | Electrolytic, 100μF, 25V |
| C109, 110 | | ECQM1H104KZ | Polyester, 0.1μF, 50V, ±10% |
| C111 | | ECQM1H562KZ | Polyester, 0.0056μF, 50V, ±10% |
| C112 | | **ECEA1JS4R7** | Electrolytic, 4.7μF, 63V |
| C201 | | **ECEA1CS330** | Electrolytic, 33μF, 16V |
| C202, 203 | | **ECEA50Z1** | Electrolytic, 1μF, 50V |
| C204 | | ECQM1H473KZ | Polyester, 0.047μF, 50V, ±10% |
| C205 | | **ECEA1AS221** | Electrolytic, 220μF, 10V |
| C206 | | **ECEA50Z1** | Electrolytic, 1μF, 50V |
| C207 | | ECCD1H101K | Ceramic, 100pF, 50V, ±10% |
| C208 | | ECCD1H390K | Ceramic, 39pF, 50V, ±10% |
| C209 | | **ECEA1ES101** | Electrolytic, 100μF, 16V |
| C210 | | ECQM1H224KZ | Polyester, 0.22μF, 50V, ±10% |
| C211 | | ECQM1H473KZ | Polyester, 0.047μF, 50V, ±10% |
| C212 | | **ECEA50Z3R3** | Electrolytic, 3.3μF, 50V |
| C213 | | ECCD1H471K | Ceramic, 470pF, 50V, ±10% |
| C214 | | **ECEA1ES101** | Electrolytic, 100μF, 25V |
| C215 | | **ECEA50Z1** | Electrolytic, 1μF, 50V |
| C216 | | **ECEA1ES470** | Electrolytic, 47μF, 25V |
| C301, 302 | ⚠ | ECQK1123FZ | Polyester, 0.012μF, 125V, ± 1% |
| C303 | | **ECEA50Z1** | Electrolytic, 1μF, 50V |
| C304 | | **ECEA1HS100** | Electrolytic, 10μF, 50V |
| C305 | | ECQM1H122KZ | Polyester, 0.0012μF, 50V, ±10% |
| C306 | | **ECEA50Z1** | Electrolytic, 1μF, 50V |
| **C601** [M] | ⚠ | ECQF1A473MD | Polyester, 0.047μF, 400V, ±20% |
| **C601** [MC] | ⚠ | ECQU1A473ME | Polyester, 0.047μF, 400V, ±20% |

# ■ TERMINAL GUIDE OF TRANSISTOR AND IC

| AN6675 | AN6680 | AN6682 | SVITC4011BP | 2SC1846 | 2SC1328 | 2SD637 | 2SD389 |
|---|---|---|---|---|---|---|---|
| 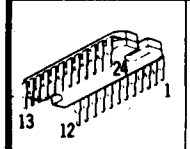 | 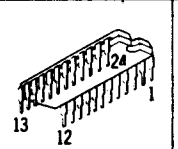 | 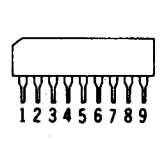 | 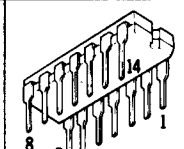 | 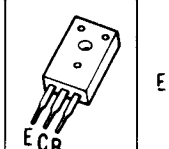 | 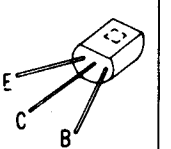 | 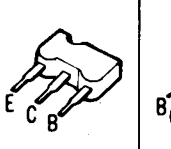 | 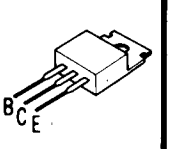 |

## ■ TROUBLE SHOOTING

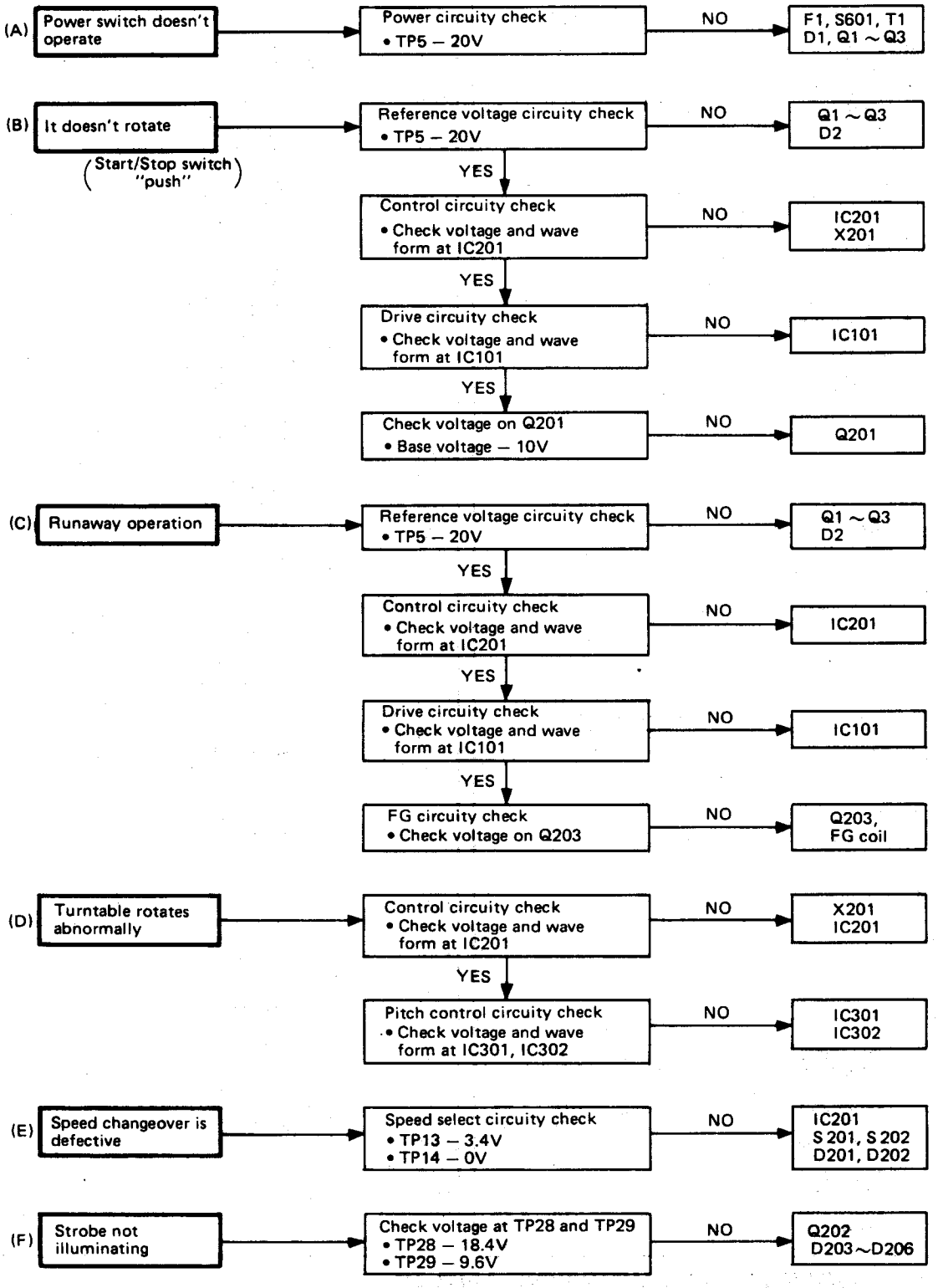

# Printed Circuit Board

+ B lines
Earth (Ground) lines

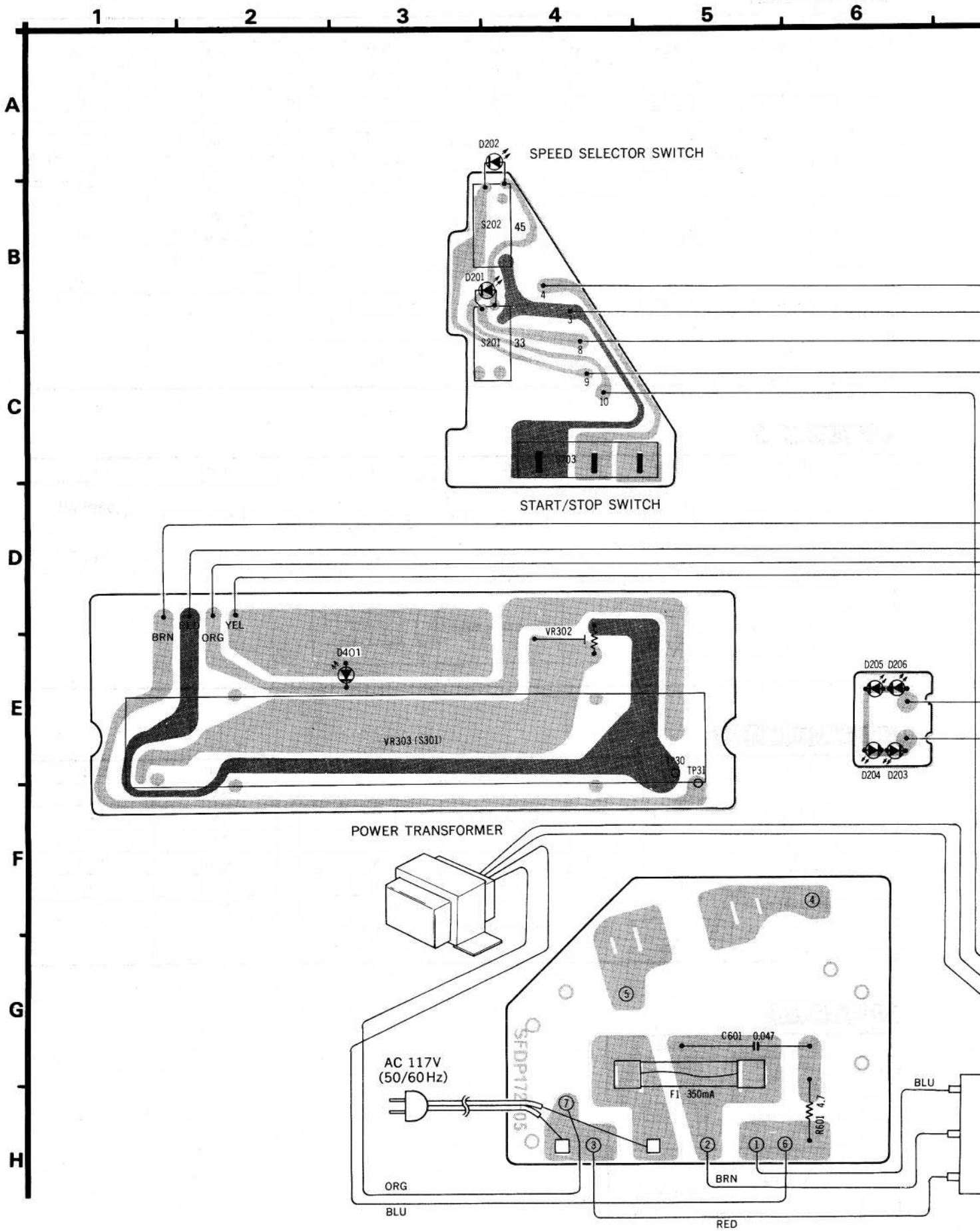

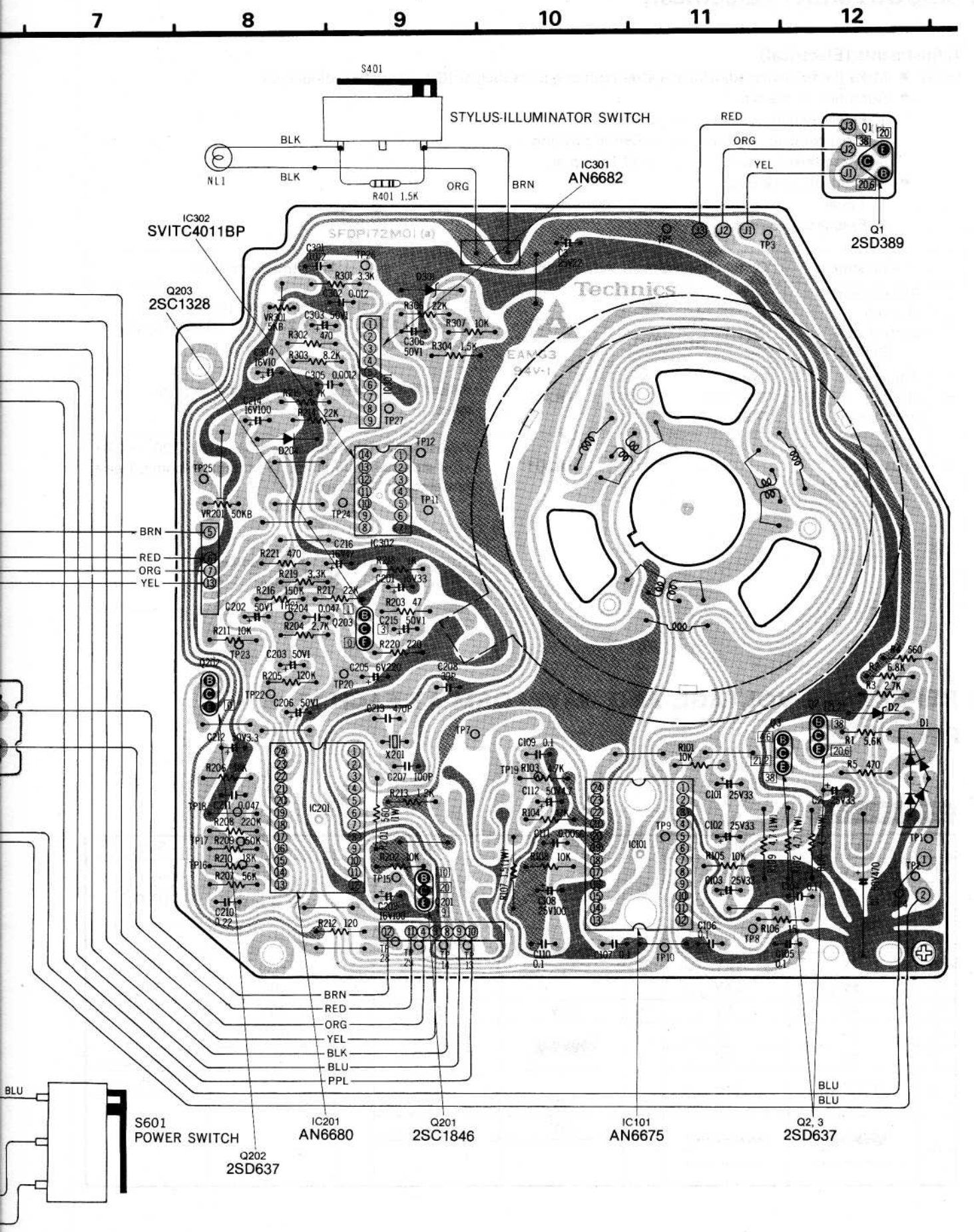
7
8
9
10
11
12
S401
STYLUS-ILLUMINATOR SWITCH
BLK
BLK
NL1
R401 1.5K
ORG
BRN
IC301
AN6682
RED
ORG
YEL
Q1
2SD389
IC302
SVITC4011BP
Q203
2SC1328
Technics
BRN
RED
ORG
YEL
BRN
RED
ORG
YEL
BLK
BLU
PPL
BLU
BLU
BLU
S601
POWER SWITCH
IC201
AN6680
Q201
2SC1846
IC101
AN6675
Q2, 3
2SD637
Q202
2SD637

# ■ ADJUSTMENT (Electrical)

### Adjustments (Electrical)

Notes:
- Make the following adjustments after replacing parts such as IC's, transistors, diodes, etc.
- Condition of the set.
  1. Power switch ..... ON
  2. Pitch control ..... Center position
  3. Speed selector switch ..... 33-1/3 r.p.m.
- Instruments to be used
  1. Tester
  2. Frequency counter

| | Adjustment | Connection Points | Adjustment Point | Adjustment Method |
|---|---|---|---|---|
| A | Adjustment of pitch control ±0% (PITCH) | Frequency counter<br>⊕ — TP27<br>⊖ — GROUND | VR301 | 1. Pitch control switch to center position.<br>2. Adjust VR301 for 262.08 kHz ±0.05 kHz of frequency. |
| B | Adjustment of pitch control gain | Tester<br>TP31 and<br>TP32 | VR302 | Adjust VR302 for 2.7 kΩ ±0.1 of resistance value |
| C | Braking adjustment (BRAKE) | – | VR201 | Adjust VR201 for complete stop within 120° ~ 270° after stop signal initiated. (Turntable becomes free a few seconds after stop)<br> 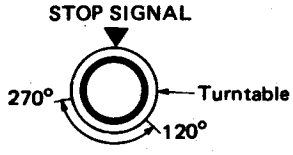 |

# ■ REFERENCE VOLTAGE AND WAVEFORM AT EACH IC PIN

**IC101 (AN6675)**

| | Start | Stop |
|---|---|---|
| ① | 2V | 2V 1.9 |
| ② | 2V | 2V 1.9 |
| ③ | 0V | 0V |
| ④ | 5V | 5V 1.9 |
| ⑤ | 5V | 5V 5.00 |
| ⑥ | 5V 6.5 | 6.6V 6.5 |
| ⑦ | 0V | 0V 0 |
| ⑧ | 5V | 5V 4.8 |
| ⑨ | 0V | 0V 0 |
| ⑩ | 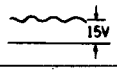 | 15V 15.5 |
| ⑪ | 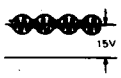 | 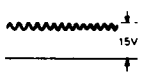 |

| | Start | Stop |
|---|---|---|
| ⑫ | 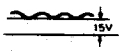 | 15V 15.5 |
| ⑬ | 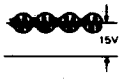 | 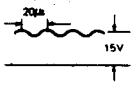 |
| ⑭ | 15V | 15V 15.5 |
| ⑮ | 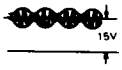 | 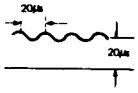 |
| ⑯ | 0V | 0V 0 |
| ⑰ | 15V | 15V 15.6 |

| | Start | Stop |
|---|---|---|
| ⑱ | Same as at right | 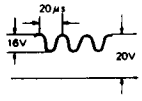 |
| ⑲ | 20V | 20V 20.8 |
| ⑳ | 20V | 20V 20.8 |
| ㉑ | 20V | 20V 20.6 |
| ㉒ | 0.2V | 0.2V .1 |
| ㉓ | 20V | 20V 20.8 |
| ㉔ | 1.7V | 1.7V 1.9 |

## IC201 (AN6680)

| | Start | Stop | | Start | Stop | | Start | Stop |
|---|---|---|---|---|---|---|---|---|
| ① | 2.5V | 2.5V | ⑧ | 0V | 0V | ⑯ | 5V | 2.5V 2.0V |
| ② | Same as at right | 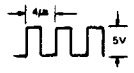 | ⑨ | 9.8V | 9.8V | ⑰ | 5V | 5V |
| | | | ⑩ | 10V | 10V 9.3V | ⑱ | 0V | 0V 2.2V |
| ③ | Same as at right | 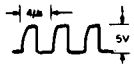 | ⑪ | Same as at right | 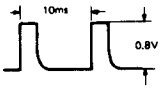 | ⑲ | 7.5V | 0V 7.6V |
| | | | | | | ⑳ | 0V | 5V 5.9V |
| | | | | | | ㉑ | 1.5V | 0V |
| | | | ⑫ | 0V | 0V | ㉒ | 3V | 3V |
| ④ | Same as at right | 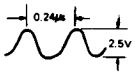 | ⑬ | 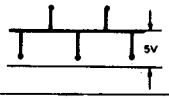 | 0.2V | ㉓ | 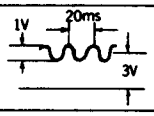 | 3V |
| ⑤ | Same as at right | 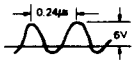 | ⑭ | 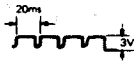 | 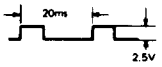 | ㉔ | 2.8V | 2.8V |
| ⑥ | 3.4V | 3.4V | ⑮ | 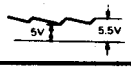 | 8V | | | |
| ⑦ | 0V | 0V | | | | | | |

## IC301 (AN6682)

| | Start | Stop | | Start | Stop | | Start | Stop |
|---|---|---|---|---|---|---|---|---|
| ① | Same as at right | 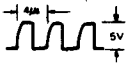 | ④ | Same as at right | | ⑧ | Same as at right | 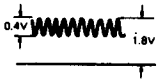 |
| ② | Same as at right | 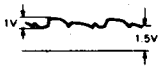 | ⑤ | 0V | 0V | ⑨ | 9V | 9V 9.4 |
| | | | ⑥ | 3.9V | 3.9V 4.4 | | | |
| ③ | Same as at right | 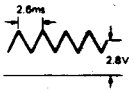 | ⑦ | Same as at right | 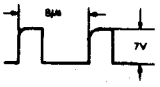 | | | |

## IC302 (SVITC4011BP)

| | Start | Stop | | Start | Stop | | Start | Stop |
|---|---|---|---|---|---|---|---|---|
| ① | Same as at right | 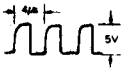 | ⑤ | Same as at right | 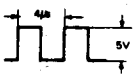 | ⑨ | 5V | 5V 0.4 |
| | | | | | | ⑩ | 5V | 5V 5.2 |
| | | | | | | ⑪ | 5V | 5V 5.2 |
| ② | 5V | 5V 5.2 | ⑥ | 5V | 5V 5.2 | ⑫ | 0.6V | 0.6V 0.4 |
| ③ | Same as at right | | ⑦ | 0V | 0V 0 | ⑬ | 0.6V | 0.6V 0.4 |
| | | | ⑧ | Same as at right | 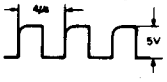 | ⑭ | 5V | 5V 5.2 |
| ④ | 5V | 5V 2.9 | | | | | | |

appears to be doc error. on schem, pin 9 is tied to pins 12 & 13

## Q202 (2SD637)

| | Start | Stop |
|---|---|---|
| E | 0V | 0V |
| C | Same as at right | 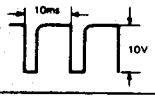 |
| B | Same as at right | 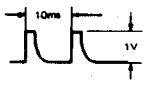 |

## ■ BLOCK DIAGRAM

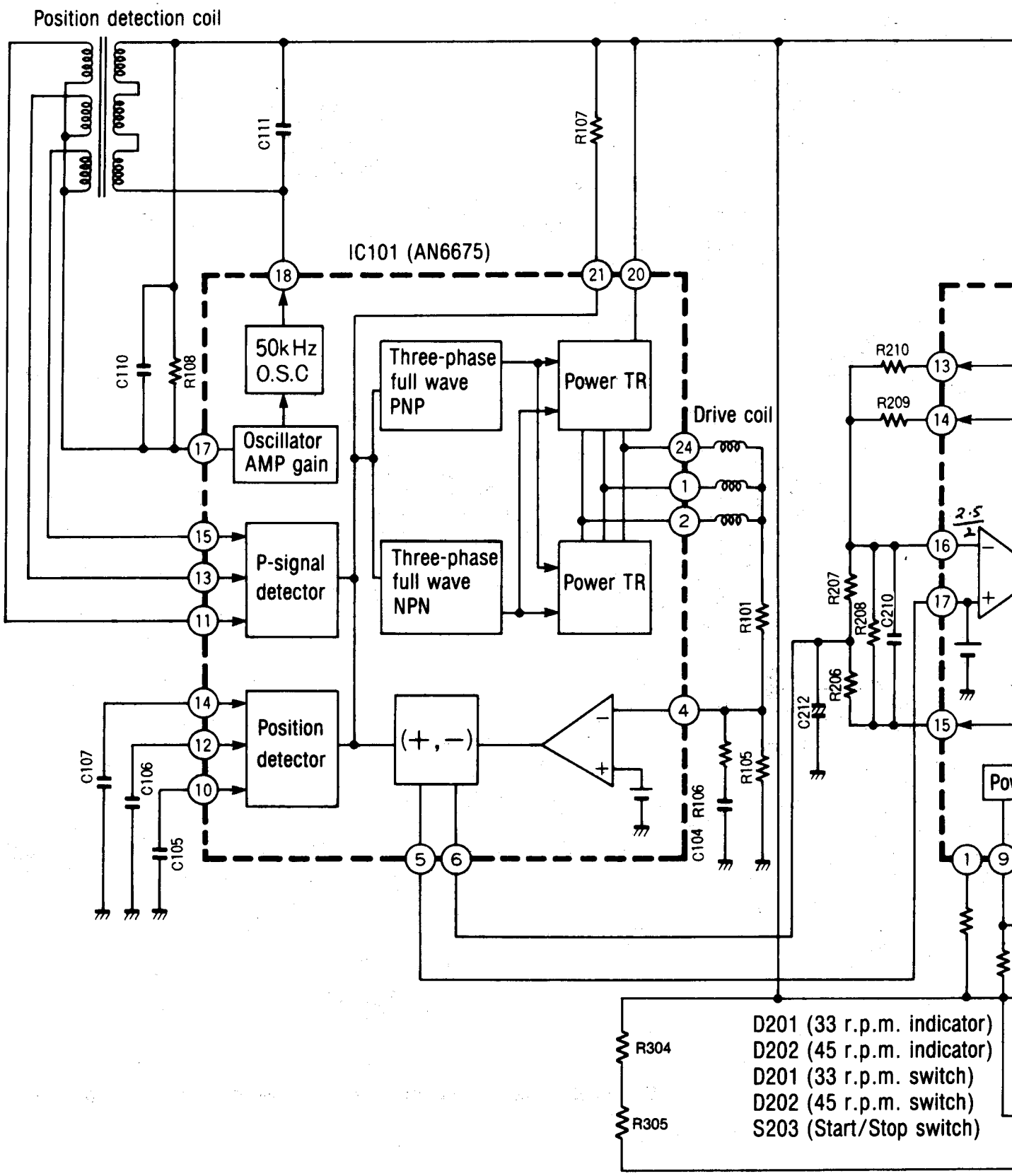

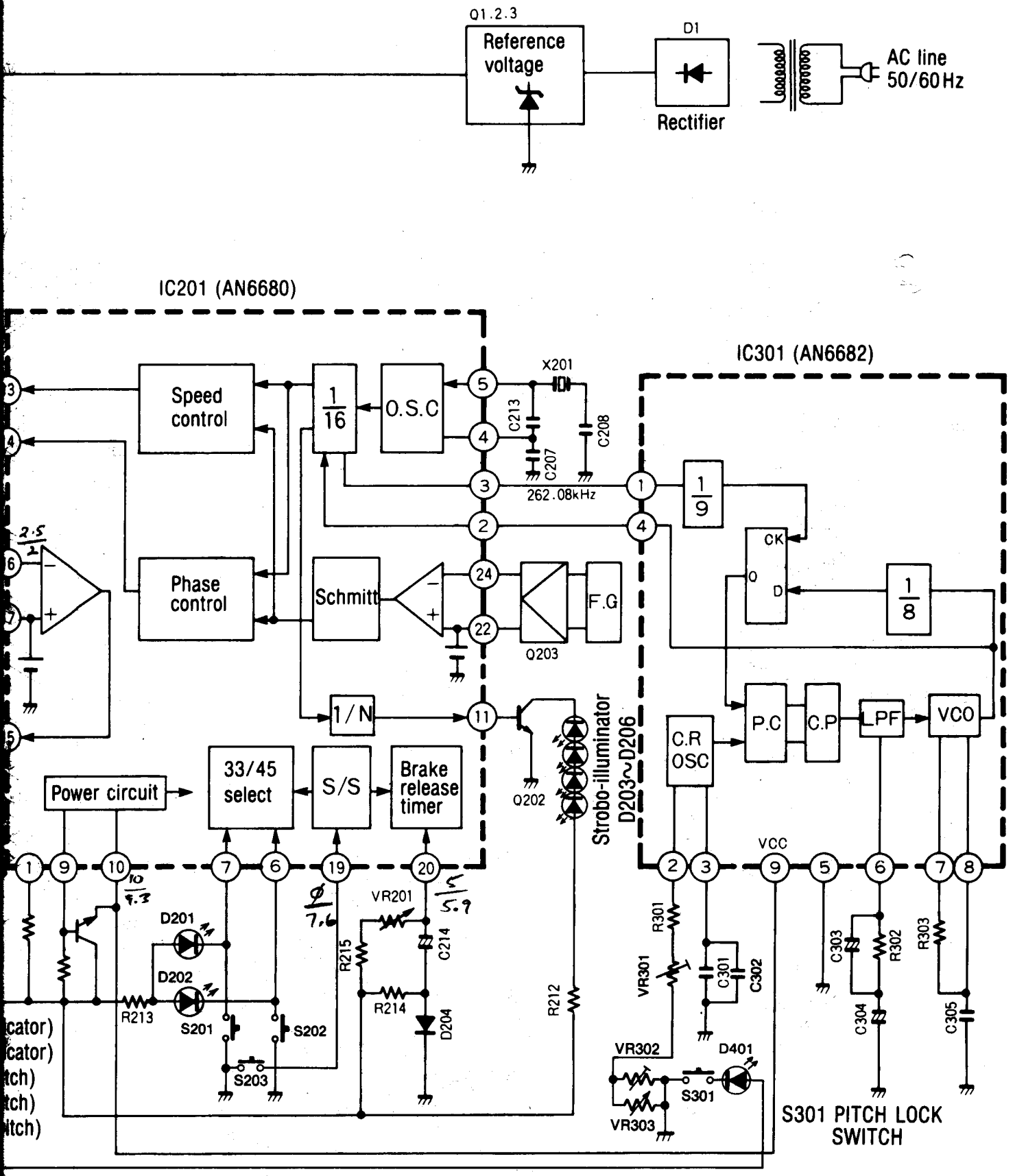
Q1.2.3
Reference voltage
D1
Rectifier
AC line 50/60Hz
IC201 (AN6680)
IC301 (AN6682)
Speed control
1/16
O.S.C
X201
C213
C207
C208
262.08kHz
1/9
CK
D
1/8
Phase control
Schmitt
F.G
Q203
1/N
Q202
Strobo-illuminator D203~D206
C.R OSC
P.C
C.P
LPF
VCO
Power circuit
33/45 select
S/S
Brake release timer
VCC
D201
D202
R213
S201
S202
S203
VR201
R215
C214
R214
D204
R212
R301
VR301
C301
C302
C303
R302
R303
C304
C305
VR302
VR303
S301
D401
S301 PITCH LOCK SWITCH
Should be
Microwave

## ■ EXPLODED VIEWS

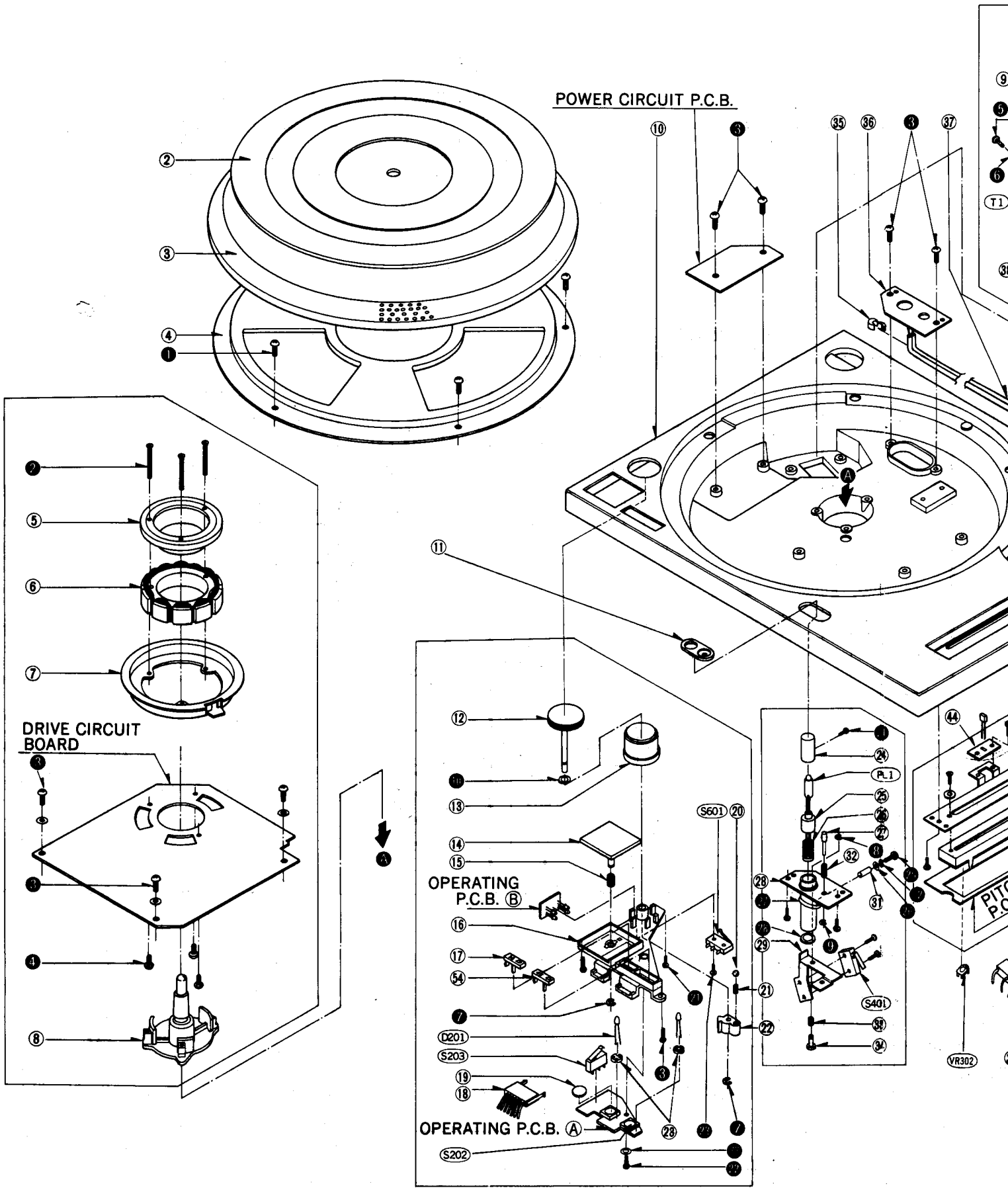

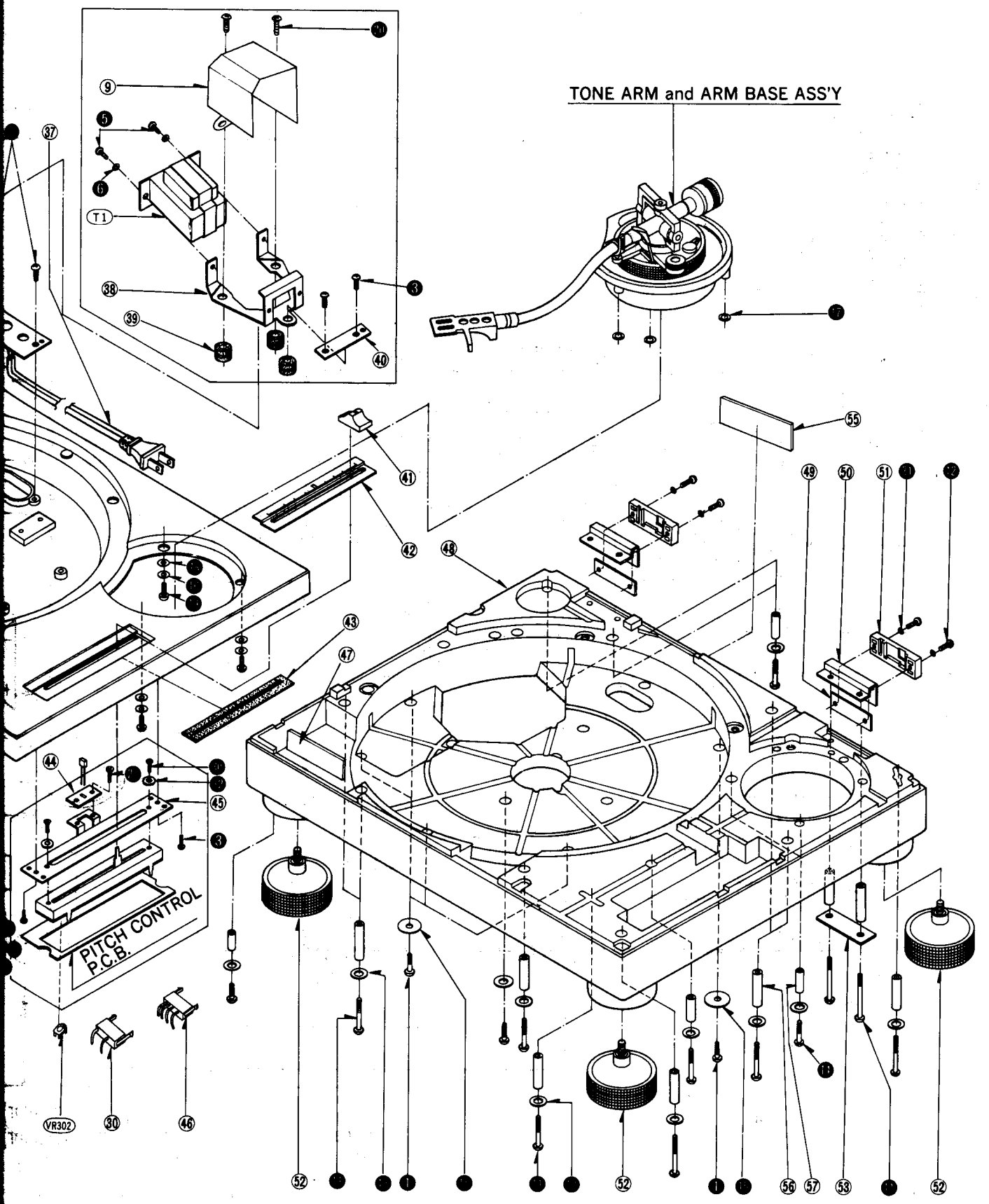
TONE ARM and ARM BASE ASS'Y
PITCH CONTROL P.C.B.
VR302

# ■ REPLACEMENT PARTS LIST (Mechanical)

**Notes:** 1. Part numbers are indicated on most mechanical parts.
Please use this part number for parts orders.
2. ⚠ indicates that only parts specified by manufacturer be used for safety.
3. SL-1200MK2(M) → [M], SL-1200MK2(MC) → [MC]

| Ref. No. | | Part No. | Part Name & Description |
|---|---|---|---|
| **CABINET and CHASSIS PARTS** | | | |
| 1 | | SFAD122-01A | Dust Cover |
| 2 | | SFTG172-01 | Turntable Mat |
| 3 | | SFTE172-01Z | Turntable |
| 4 | | SFUM172-05 | Cover, Turntable |
| 5 | | SFMGQ20-01 | Cover, Stater Frame Ass'y |
| 6 | | SFMG520-31A | Stater Frame |
| 7 | | SFMZ172-01E | FG Detector Coil Ass'y |
| 8 | | SFMZQ20-01A | Shaft, Stater Frame Ass'y |
| 9 | | SFUP122-12 | Plate, Shield |
| 10 | | SFAC122-01 | Cabinet |
| 11 | | SFUM172-04 | Ornament, Stylus-illuminator |
| 12 | | SFKT122-01 | Knob, Power Switch |
| 13 | | SFKK122-01E | Case, Strobe-illuminator |
| 14 | | SFKT015-06 | Knob, Start/Stop Switch |
| 15 | | SFQA122-01 | Spring, Start/Stop Knob |
| 16 | | SFUM122-01 | Base, Operation |
| 17 | | SFKT015-01E | Knob, Speed Selector (33-1/3 r.p.m.) |
| 18 | | SFDJ122-02E | Connector, 7-PIN |
| 19 | | SFGZ122-01 | Spacer, Rubber (Speed Selector) |
| 20 | | SFYB5-32 | Ball, Switch Cam |
| 21 | | SFQA520-01 | Spring, Switch Cam |
| 22 | | SFUM122-03 | Cam, Switch |
| 23 | | SFUM015-11 | Spacer, LED |
| 24 | | SFKK172-01 | Cover, Lamp |
| 25 | | SFXB122-02 | Boss, Drive |
| 26 | | SFQA172-01 | Spring, Drive Boss |
| 27 | | SFXJ172-01 | Pin, Lock Canceler |
| 28 | | SFUP122-02E | Bracket, Stylus-illuminator |
| 29 | | SFUP122-03 | Plate, Lock OPeration |
| 30 | | SFDJ122-03E | Connector, 3-PIN |
| 31 | | SFXO172-01 | Pin, Guide |
| 32 | | SFQA520-01 | Spring, Lock Canceler Pin |
| 33 | | SFQA001-02 | Spring, Lock Operating Plate M'tg |
| 34 | | SFXJ172-05 | Pin, Lock Operating Plate M'tg |
| 35 | | SFHK040L | Clamper, AC Cord |
| 36 | | SFUP025-01 | Bracket, AC Cord |
| 37 | | **RJA9YA** | AC Cord |
| 38 | | SFUP132-03 | Bracket, Power Transformer |
| 39 | | SFGC122-01 | Cushion, Power Transformer |
| 40 | | SFUP122-10 | Spacer, Power Transformer |
| 41 | | SFKT122-02 | Knob, Pitch Control Volume |
| 42 | | SFKK122-03 | Ornament, Pitch Control Volume |
| 43 | | SFUZ122-01 | Shading Cloth, Pitch Control Volume |
| 44 | | SFUP122-09 | Holder, LED |
| 45 | | SFUP122-01 | Bracket, Pitch Control Volume |
| 46 | | SFDJ122-01E | Connector, 4-PIN |
| 47 | | SFUP122-13 | Supporter, Bottom Base |
| 48 | | SFAU122-01 | Base, Bottom |
| 49 | | SFUP122-05 | Supporter (A), Hinge |
| 50 | | SFUP122-04 | Supporter (B), Hinge |
| 51 | | SFUM170-07 | Case, Hinge |
| 52 | | SFGC122-02E | Audio Insulator |
| 53 | | SFUP122-06 | Supporter (C), Hinge |
| 54 | | SFKT015-02E | Knob, Speed Selector (45 r.p.m) |
| **55** [M] | | SFNN122M01 | Name Plate |
| **55** [MC] | | SFNN122C01 | Name Plate |
| 56 | | SFXO122-01 | Pipe (A) |
| 57 | | SFXO122-02 | Pipe (B) |
| 58 | | SFAT122-01A | Hinge Ass'y |
| **TONE ARM and ARM BASE** | | | |
| 61 | | SFPCC31001K | Head Shell |
| 62 | | SFPAM18201K | Tone Arm Ass'y |
| 63 | | SFPWG17201K | Balance Weight Ass'y |
| 64 | | SFPRT18201K | Lift Ass'y |
| 65 | | SFPZB17202 | Knob, Arm Base Lock |
| 66 | | SFQA829-03 | Spring, Lift Ass'y |
| 67 | | SFPAB13202 | Knob, Arm Lift |
| 68 | | SFPJL18202K | Oil Damper |
| 70 | | SFPZB12203 | Plate, Arm Base Cover |
| 71 | | SFUM170-06 | Spacer, Phono Cord |
| 72 | | SFPZB12204 | Clamper, Phono Cord |
| 73 | | SFPAB18201K | Tone Arm Fixing Plate Ass'y |
| 74 | | SFPZB12201K | Plate, Position Fix |

| Ref. No. | | Part No. | Part Name & Description |
|---|---|---|---|
| **75** [M] | | SFDH360M01 | Phono Cord |
| **75** [MC] | | SFDH028-01 | Phono Cord |
| 76 | | SFEL028-01E | Ground Wire |
| 77 | | SFPRT17201K | Arm Rest |
| 78 | | SFPKD17203 | Arm Base |
| 79 | | SFPKB17201S | Ring, Arm Base Operation |
| 80 | | SFPKD12201 | Bracket, Arm Base |
| 81 | | SFPAB17206 | Knob, Anti-skate Force Control |
| **SCREWS, WASHERS and CIRCLIPS** | | | |
| ● | | **XTN3+8BFZ** | Screw |
| ● | | SFXGQ20-02 | Screw |
| ● | | **XTN3+8B** | Screw |
| ● | | **XTN26+6B** | Screw |
| ● | | **XTN4+10B** | Screw |
| ● | | **XWA4B** | Washer |
| ● | | **XUC3FT** | Circlip |
| ● | | **XUC2FT** | Circlip |
| ● | | **XUC25FT** | Circlip |
| ● | | SFXW910J02 | Washer |
| ● | | **XTN3+40BFZ** | Screw |
| ● | | **XSN3+10BVS** | Screw |
| ● | | XWE3F12FZ | Washer |
| ● | | **XTN3+25BFZ** | Screw |
| ● | | SFXW122-01 | Washer |
| ● | | **XWE3E10** | Washer |
| ● | | SFPEW1100 | Washer |
| ● | | SFPEW11003 | Washer |
| ● | | **XSN3+8S** | Screw |
| ● | | SFXG132-01 | Screw |
| ● | | **XTV3+8BFN** | Screw |
| ● | | **XTN3+10B** | Screw |
| ● | | **XTN2+10B** | Screw |
| ● | | XSN17+3FY | Screw |
| ● | | **XSN3+14S** | Screw |
| ● | | SFXW172-04 | Washer |
| ● | | XUB14FT | Circlip |
| ● | | SFUZ172-05 | O Ring |
| ● | | **XTN3+6B** | Screw |
| ● | | **XSN3+6S** | Screw |
| ● | | **XWA3BFZ** | Washer |
| ● | | **XWA3B** | Washer |
| ● | | **XWG3** | Washer |
| ● | | SFXG829-1 | Screw |
| ● | | **XUC5FT** | Circlip |
| ● | | **XTW3+6B** | Screw |
| ● | | **XTV3+6BFN** | Screw |
| ● | | **XWE4A10EW** | Washer |
| ● | | **XTN3+25B** | Screw |
| ● | | XYN3+C6FZS | Screw |
| ● | | **XSN3+12BVS** | Screw |
| ● | | SFPEW17201 | Washer |
| ● | | XWG26 | Washer |
| **ACCESSORIES** | | | |
| **A1** [M] | | SFNU122M01 | Instruction Book |
| **A1** [MC] | | SFNU122C01 | Instruction Book |
| A2 | | SFWE010 | Adaptor, 45 r.p.m. |
| A3 | | SFPEN3302 | Nut, Cartridge |
| A4 | | SFPEW9601 | Washer, Cartridge |
| A5 | | SFCZV8801 | Screw, Cartridge |
| A6 | | SFPEV9801 | Screw, Cartridge |
| A7 | | SFKO135-01 | Overhang Gauge |
| A8 | | SFPZB3501 | Shell Weight |
| **PACKINGS** | | | |
| **P1** [M] | | SFHP122M01 | Carton |
| **P1** [MC] | | SFHP122C01 | Carton |
| P2 | | SFHH122-01 | Pad, Front |
| P3 | | SFHH122-02 | Pad, Rear |
| P4 | | SFHD122-01 | Pad, Top |
| P5 | | SFHD122-02 | Pad, (A), Turntable |
| P6 | | SFHD122-03 | Pad, (B), Turntable |
| P7 | | SFYH60X60 | Polyethylene Cover, Turntable Unit and Dust Cover |
| P8 | | SFYH40X45 | Polyehtylene Cover, Turntable |

## ■ EXPLODED VIEWS

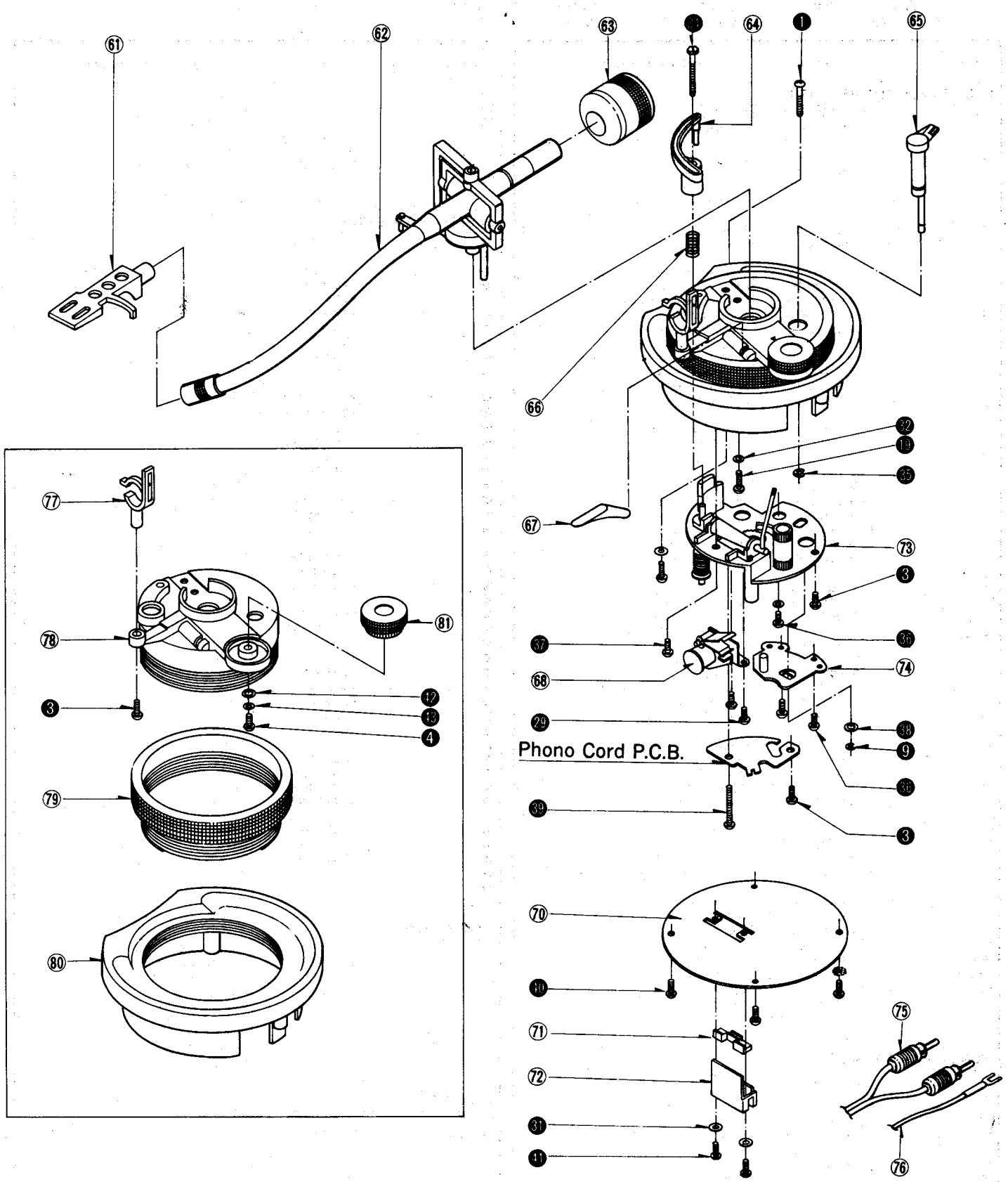




Printed in Japan