Deze download wordt u gratis aangeboden door Pick-upnaalden.nl

Web	:	www.pickupnaalden.com
Email	:	info@pick-upnaalden.nl
Facebook	:	www.facebook.com/pickupnaalden
Twitter	:	twitter.com/Pickupnaalden
Google+	:	https://plus.google.com/+FCaris_pickupnaalden

PS-4300

US Model
Canadian Model
AEP Model
E Model

FULL AUTOMATIC STEREO TURNTABLE SYSTEM

SPECIFICATIONS

GENERAL

Power Requirements:	120 V ac, 60 Hz (US, Canadian model) 110, 127, 220 or 240 V ac ∿, adjustable, 50/60 Hz (AEP model) 100, 120, 220 or 240 V ac, adjustable, 50/60 Hz (E model)
Power Consumption:	12W (US, Canadian model) 13W (AEP model) 10W (E model)
Dimensions:	Approx. 445 (w) × 155 (h) × 375 (d) mm 17 5/8 (w) × 6 1/8 (h) × 14 7/8 (d) inches
Weight:	Approx. 10.3 kg, 22 lb 12 oz (net) Approx. 11.5 kg, 25 lb 6 oz (in shipping carton)

TONEARM

Type:	Statically balanced, universal
Pivot to Stylus Length:	216.5 mm (8 1/2 inches)
Overall Arm Length:	300 mm (11 3/4 inches)
Overhang:	16.5 mm (5/8 inches)
Tracking Error:	Within +3°, -1°
Tracking-force Adjustment Range:	0–3 g
Shell Weight:	7.5 g
Cartridge Weight Range:	4–10 g (without extra weight) 10–15.5 g (with extra weight)

TURNTABLE

Platter:	31.4 cm (12 3/8 inches), aluminum-alloy diecast
Motor:	DC servo-controlled motor (brushless)
Drive System:	Direct drive
Speed:	33 1/3 rpm, 45 rpm
Pitch Control Range:	±4%
Wow and Flutter:	±0.045% (DIN) 0.03% (WRMS)
S/N Ratio:	70 dB (DIN-B)

Cartridge is not supplied with this turntable system.

SONY®
SERVICE MANUAL

SECTION 1
BLOCK DIAGRAM

1-1. BLOCK DIAGRAM

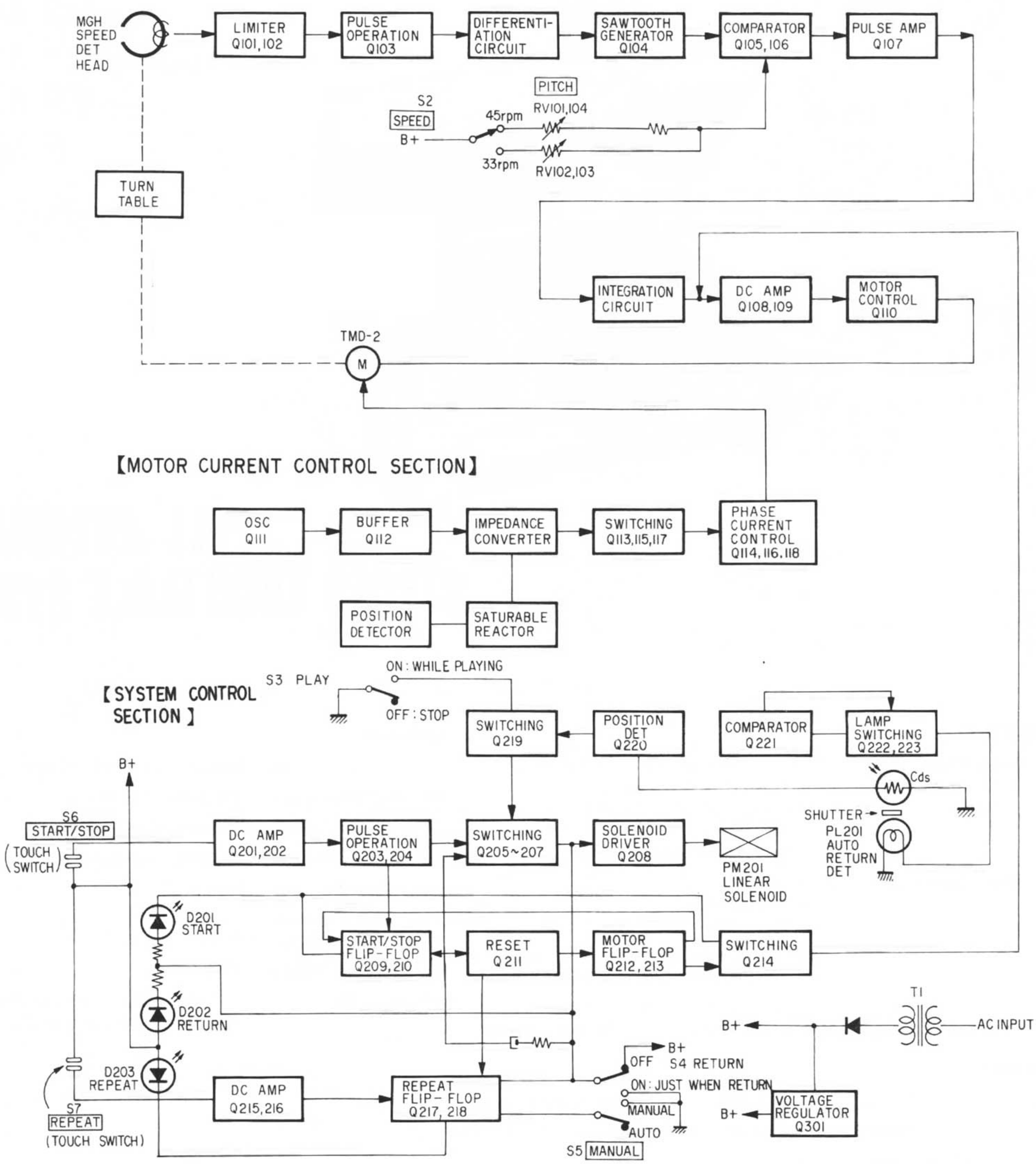

1-2. SPECIFICATION LABELS

US, Canadian model

SONY®
STEREO TURNTABLE SYSTEM
MODEL NO.PS-4300
AC 120V 60Hz 12W
SERIAL NO.
MADE IN JAPAN

AEP model

SONY®
STEREO TURNTABLE SYSTEM
MODEL NO.PS-4300
110, 127, 220, 240V 50/60Hz 13W
SERIAL NO.
MADE IN JAPAN

E model

SONY®
STEREO TURNTABLE SYSTEM
MODEL NO.PS-4300
AC 100, 120, 220, 240V 50/60Hz 10W
SERIAL NO.
MADE IN JAPAN

SECTION 2
DISASSEMBLY AND REPLACEMENT

UPPER PROTECTOR REMOVAL

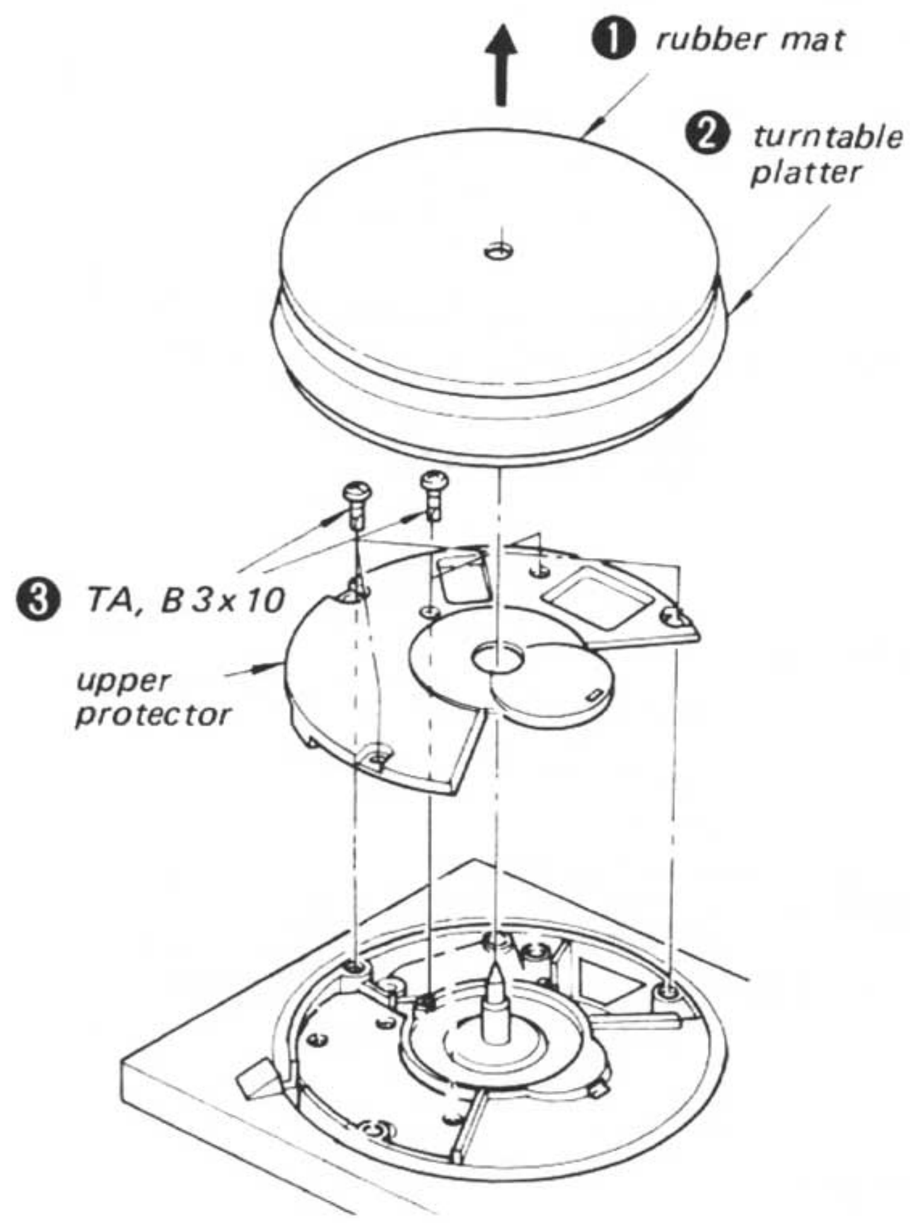

MAIN AND POWER SUPPLY CIRCUIT BOARD REMOVAL

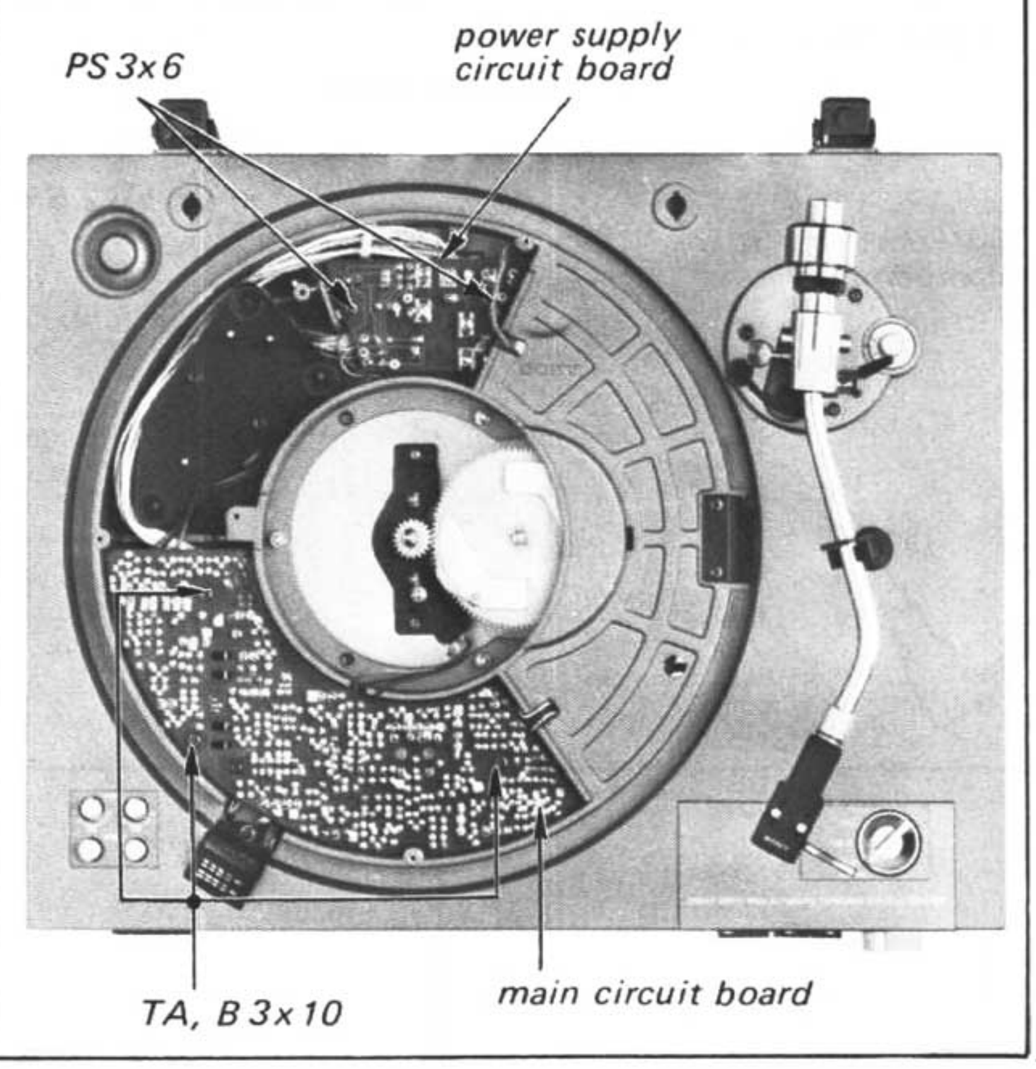

LOWER PROTECTOR REMOVAL

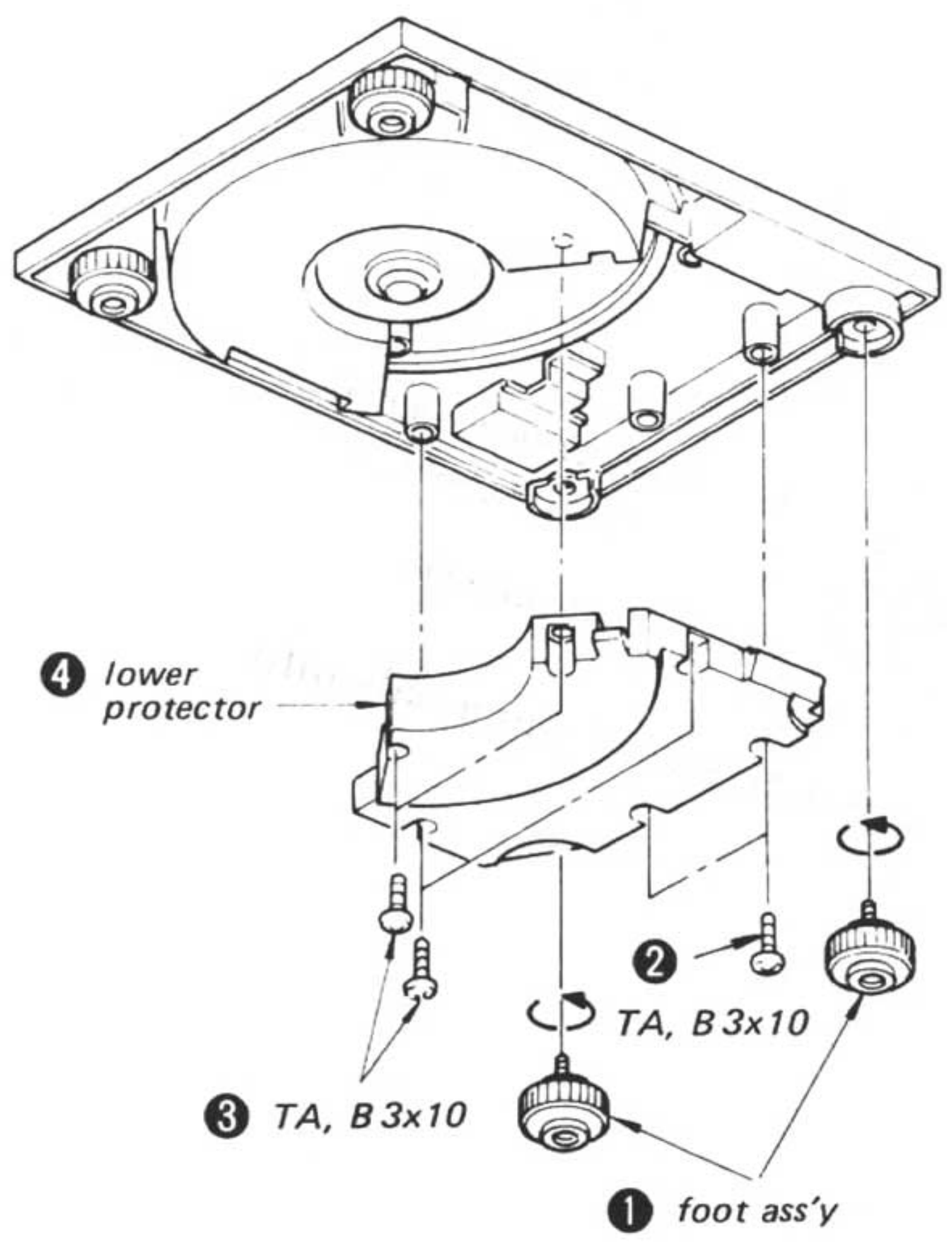

SWITCH BOARD, POWER SWITCH AND RECORD SIZE SELECTOR LEVER REMOVAL

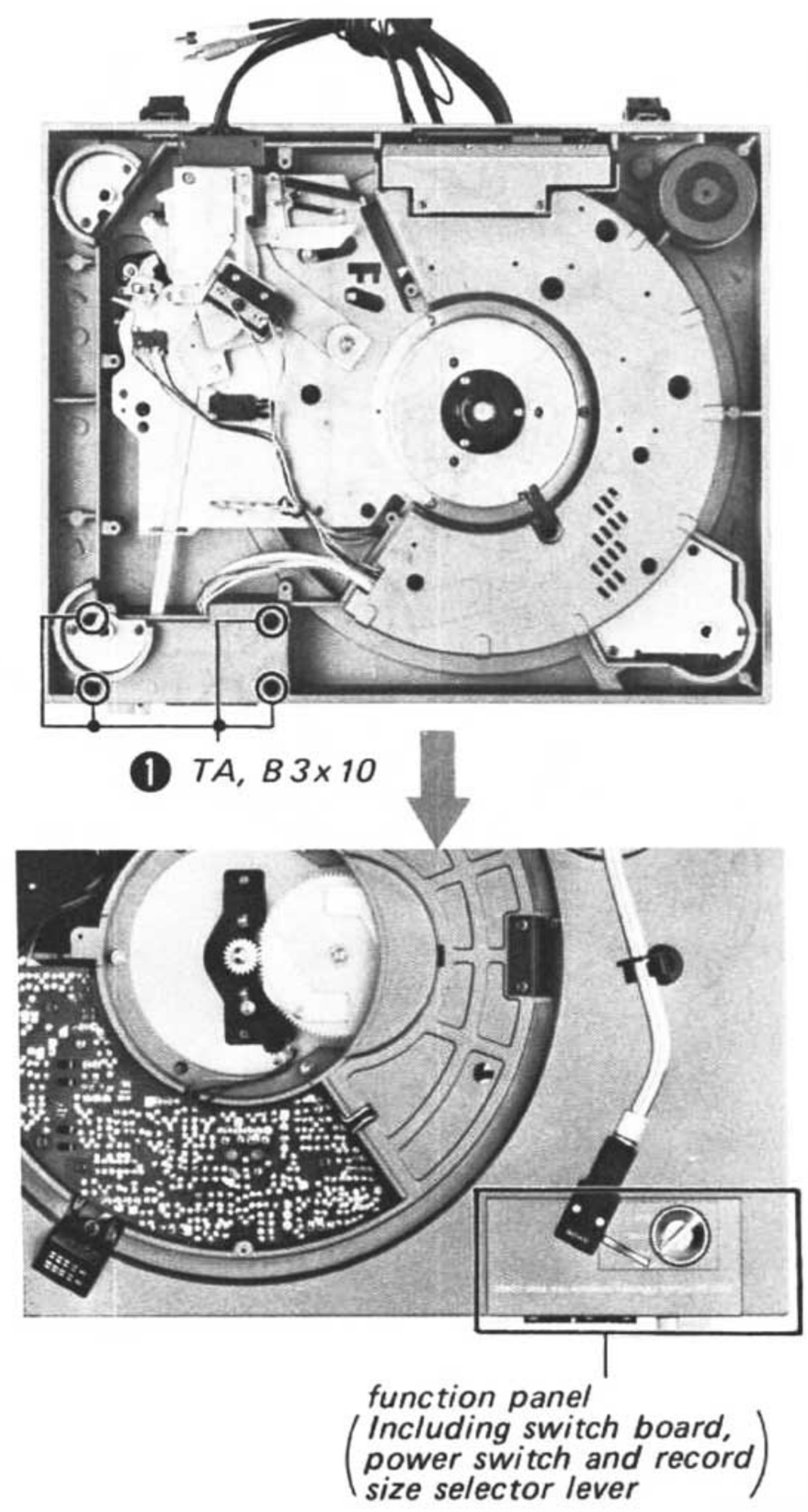

MOTOR BASE ASS'Y REMOVAL

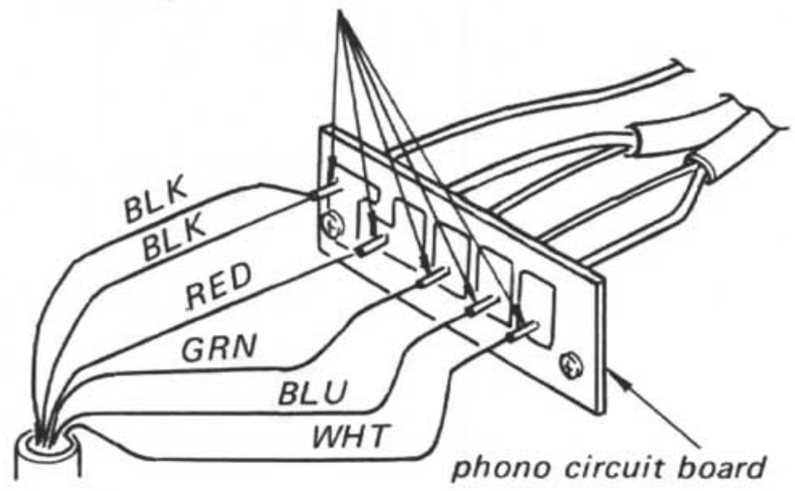

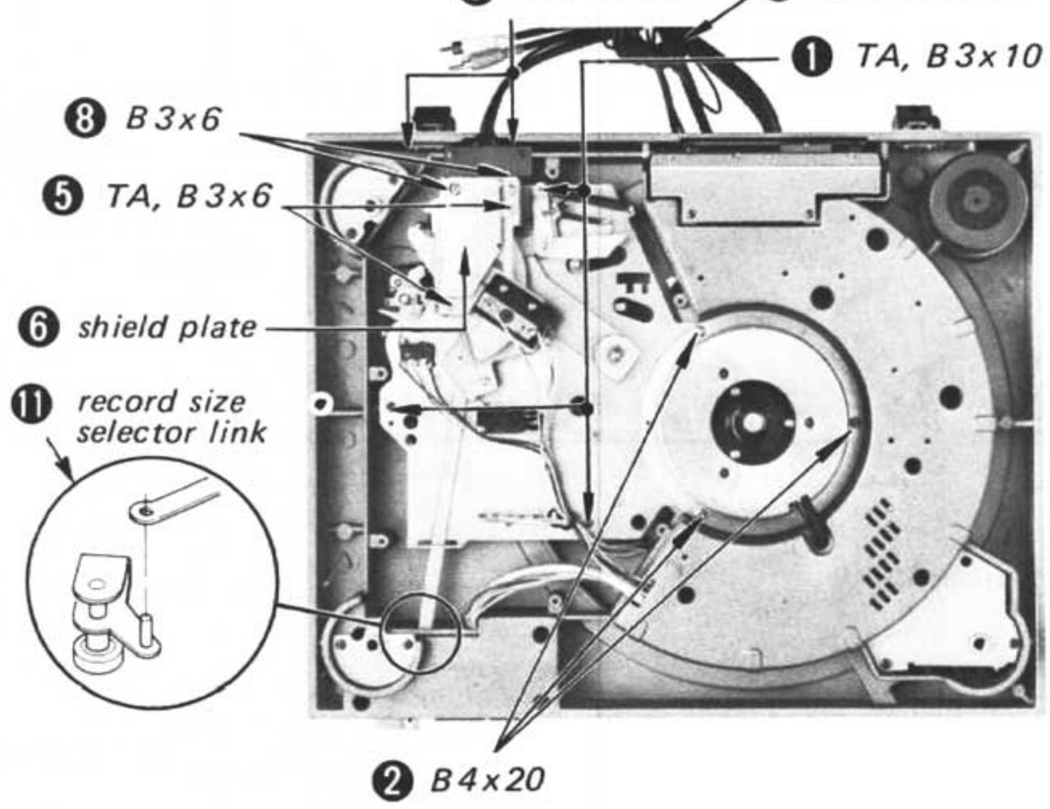

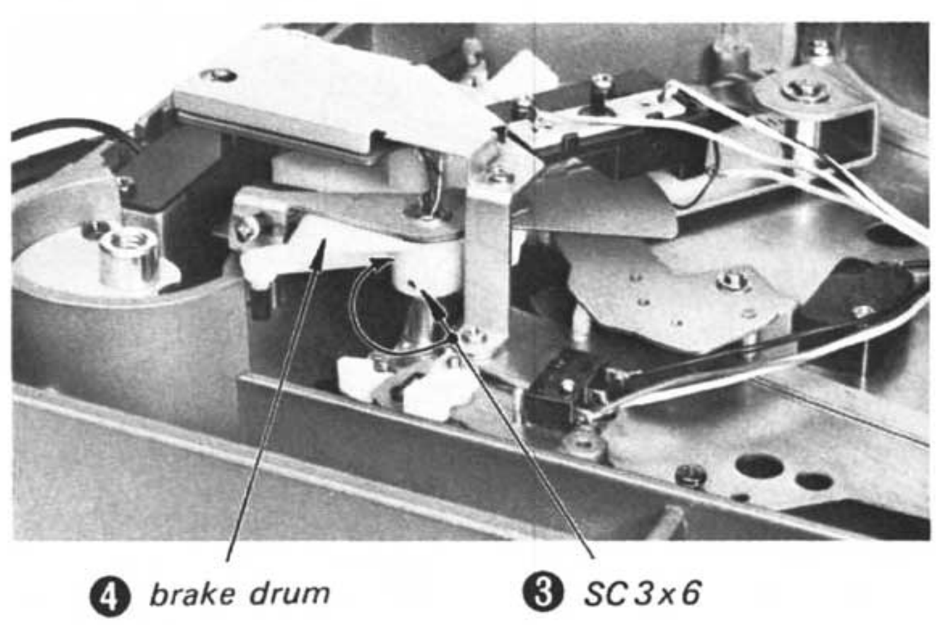

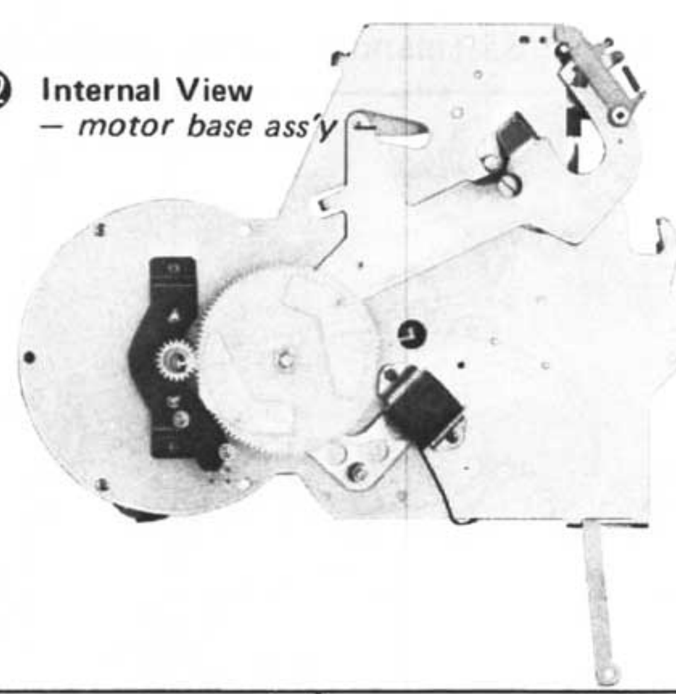

MOTOR REMOVAL

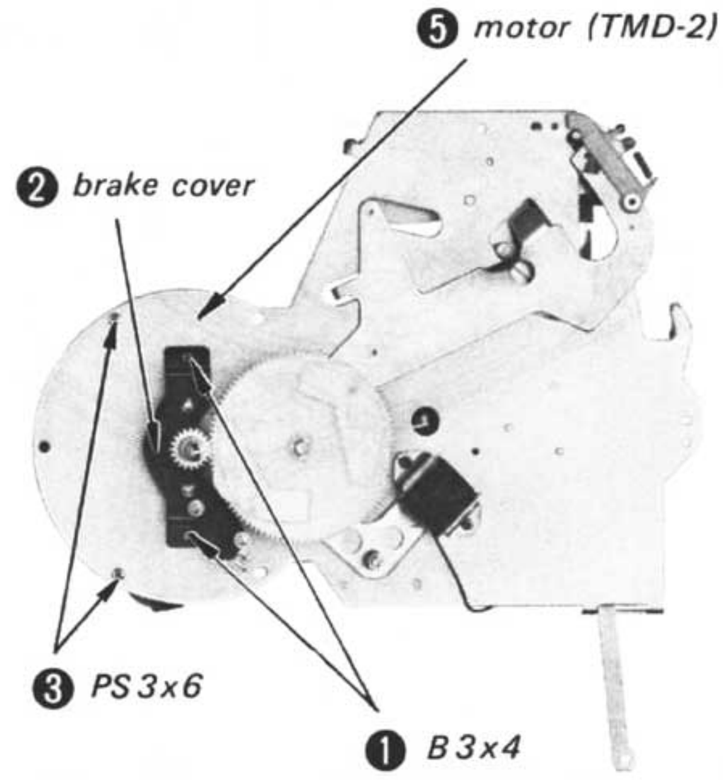

❹ Unsoler eight leads from the main circuit board. (Refer to the mounting diagram on page 11–12.)

TONEARM ASS'Y REMOVAL

1. Remove the brake drum and six lead wires. (Refer to the Motor Base Ass'y Removal – ❹ and ❼.)
2. Remove three TA, P3x10 screws as shown below.

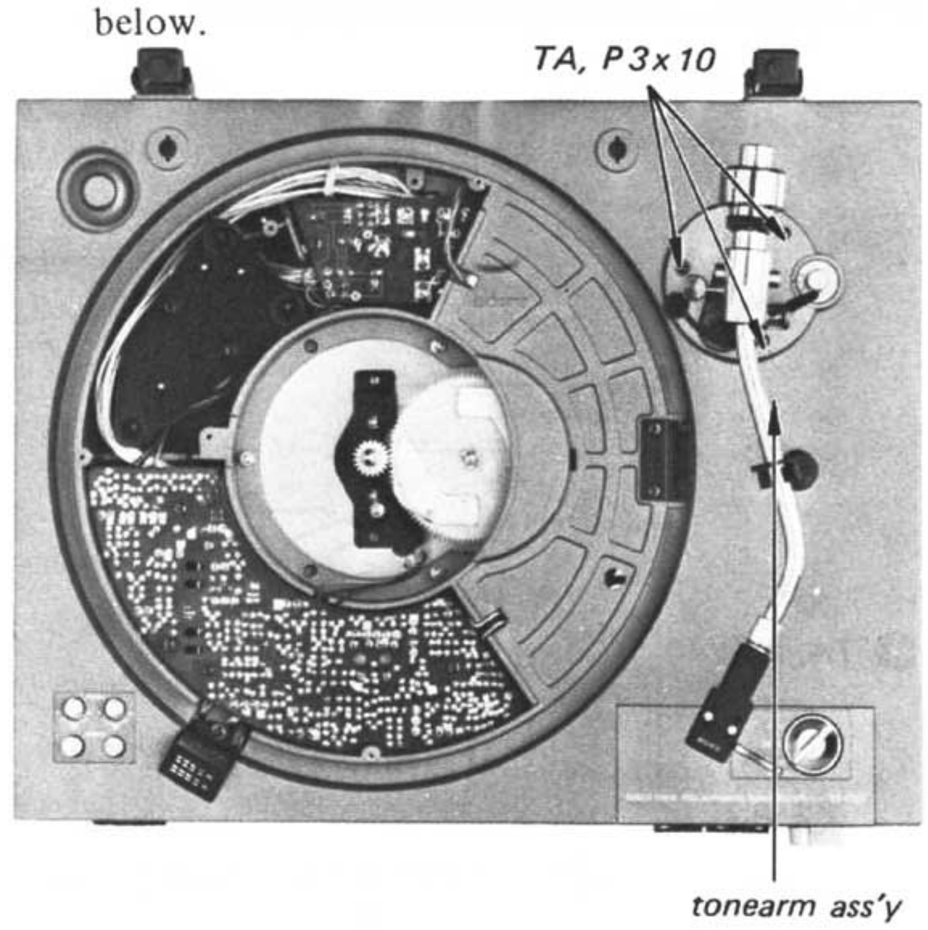

PITCH CONTROL (RV101, 102) and SPEED SWITCH (S2) REMOVAL

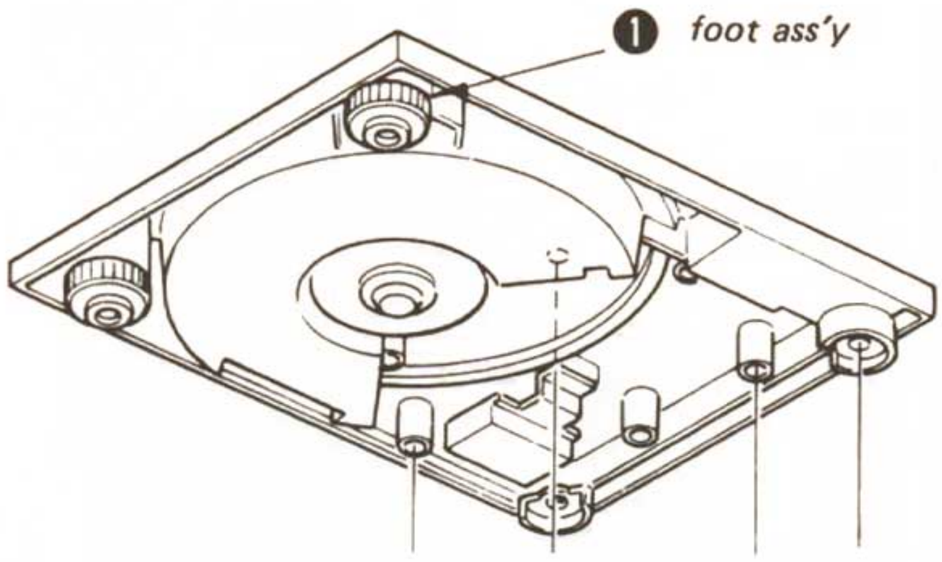

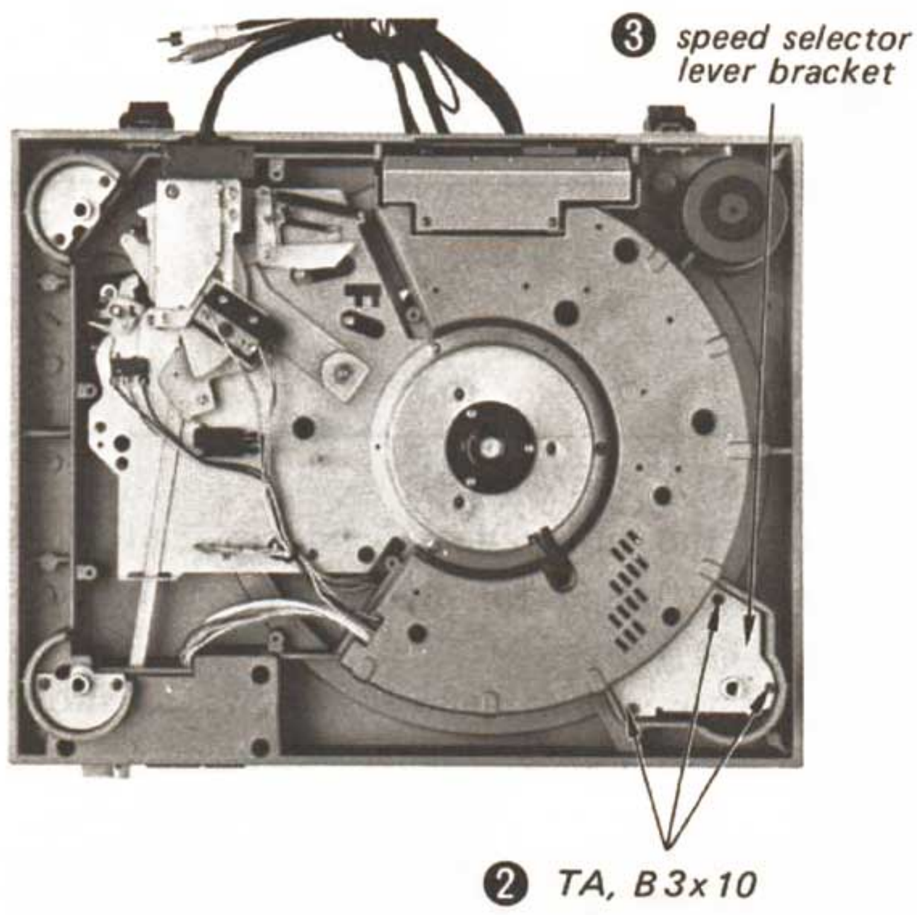

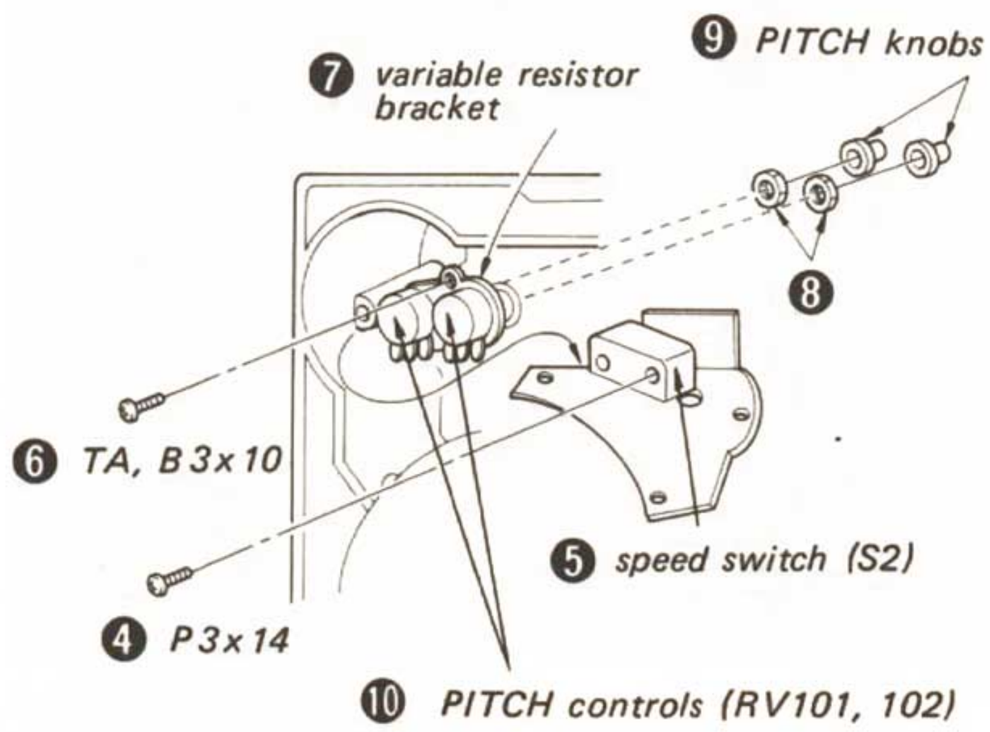

CAUTION FOR INSTALLATION

RECORD SIZE SELECTOR LEVER INSTALLATION

1. Remove the switch board, power switch and record size selector lever (See page 3).
2. Set the record size selector knob to MANUAL as shown below.

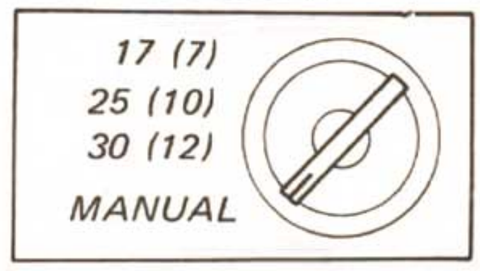

3. Install the record size selector lever as shown below.

– Top View –

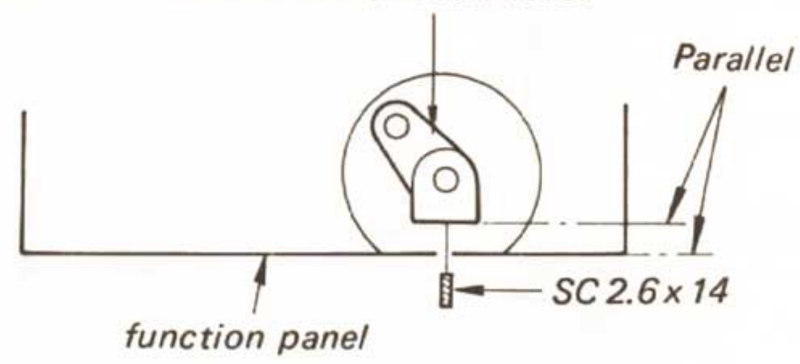

– Side View –

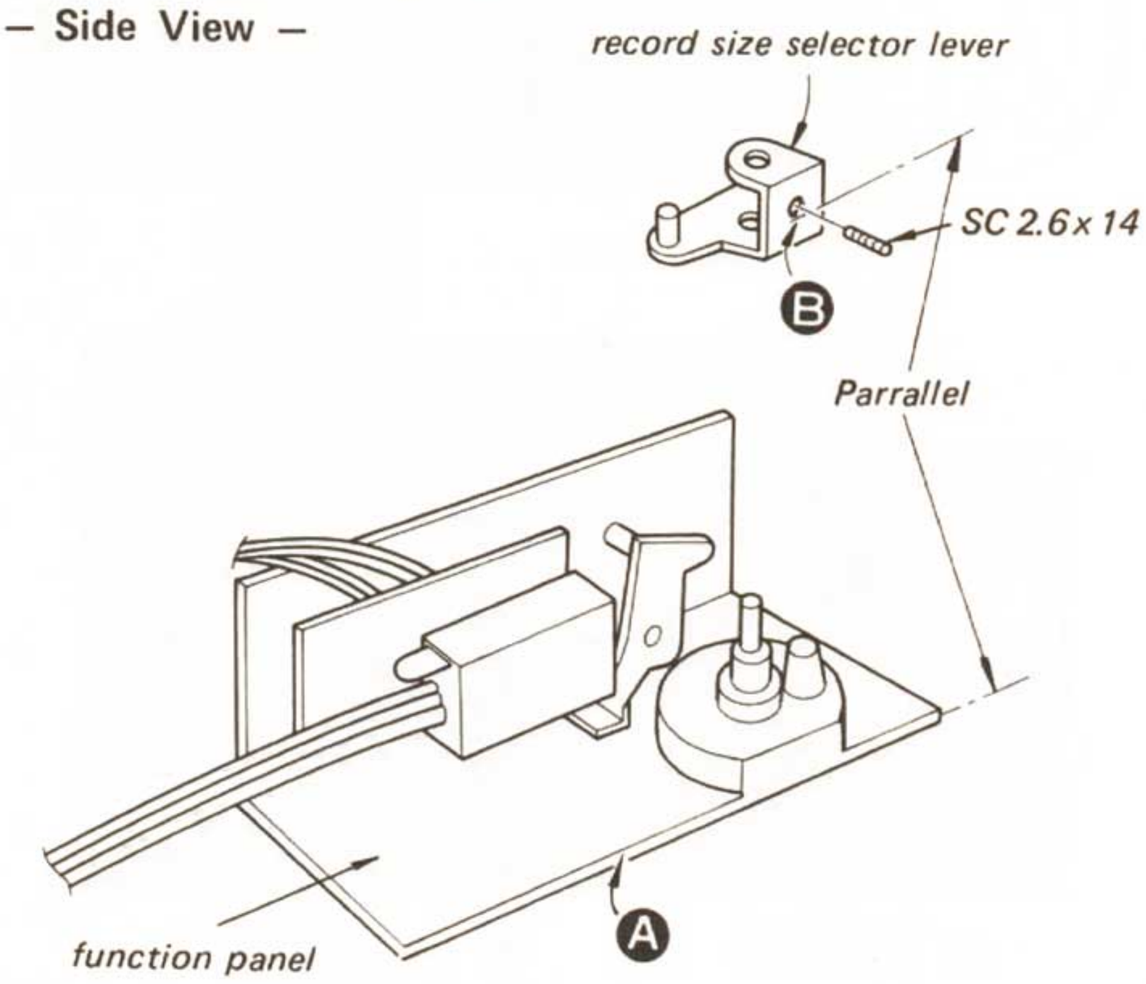

4. Confirm that S5 (manual switch) turns ON.

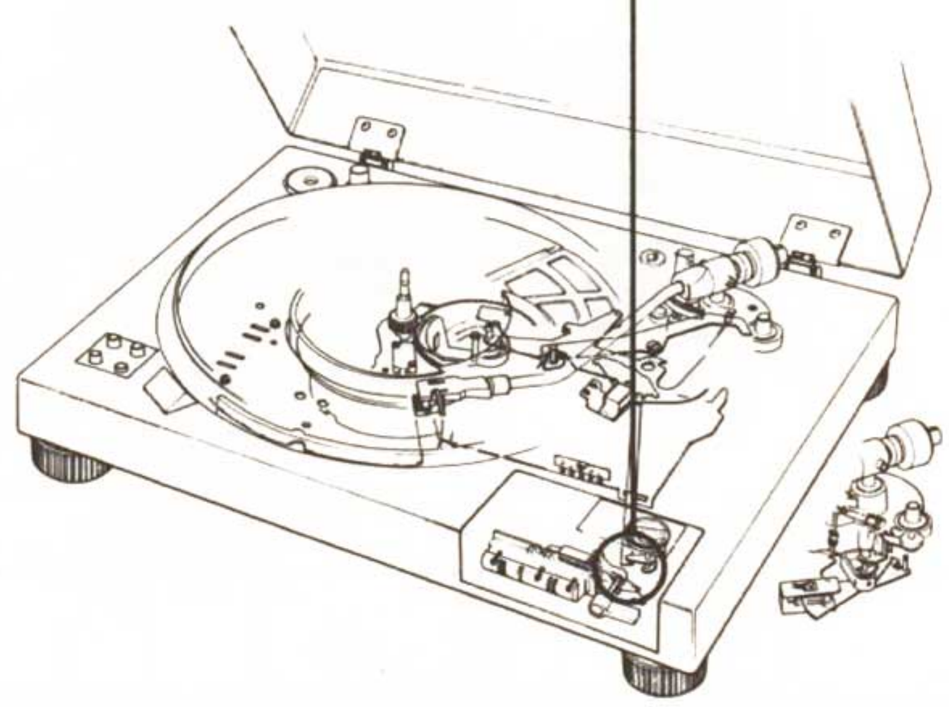

ANTI-SKATING FORCE COMPENSATOR LEVER INSTALLATION

Install the anti-skating force compensator lever as shown below.

– Top View –

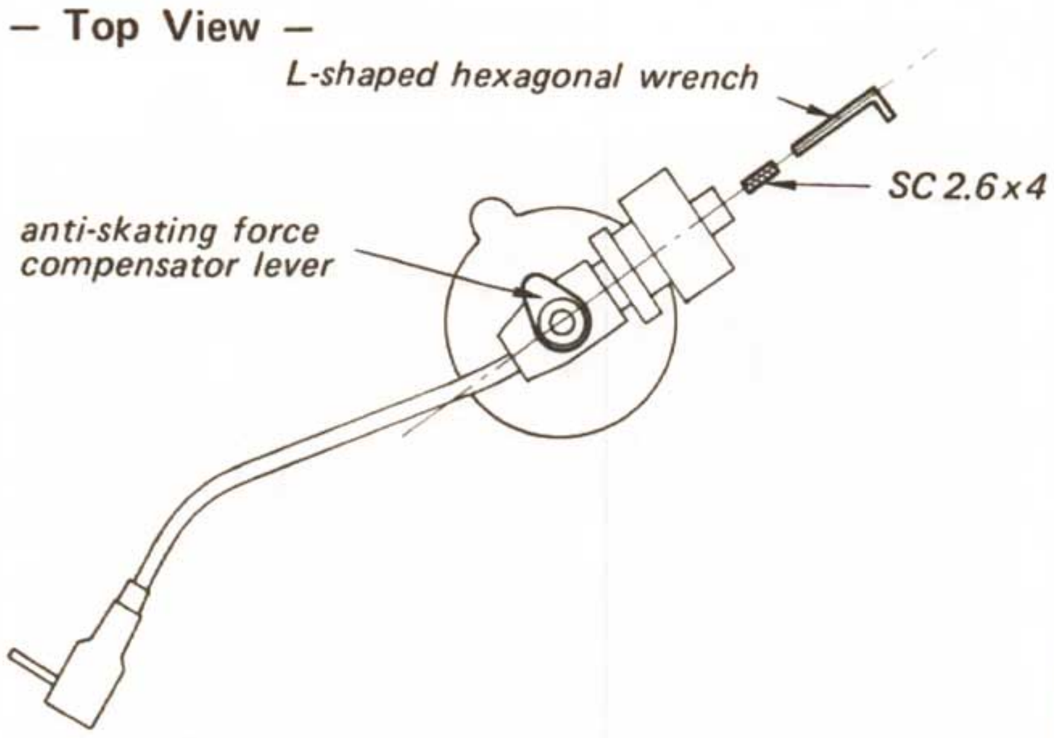

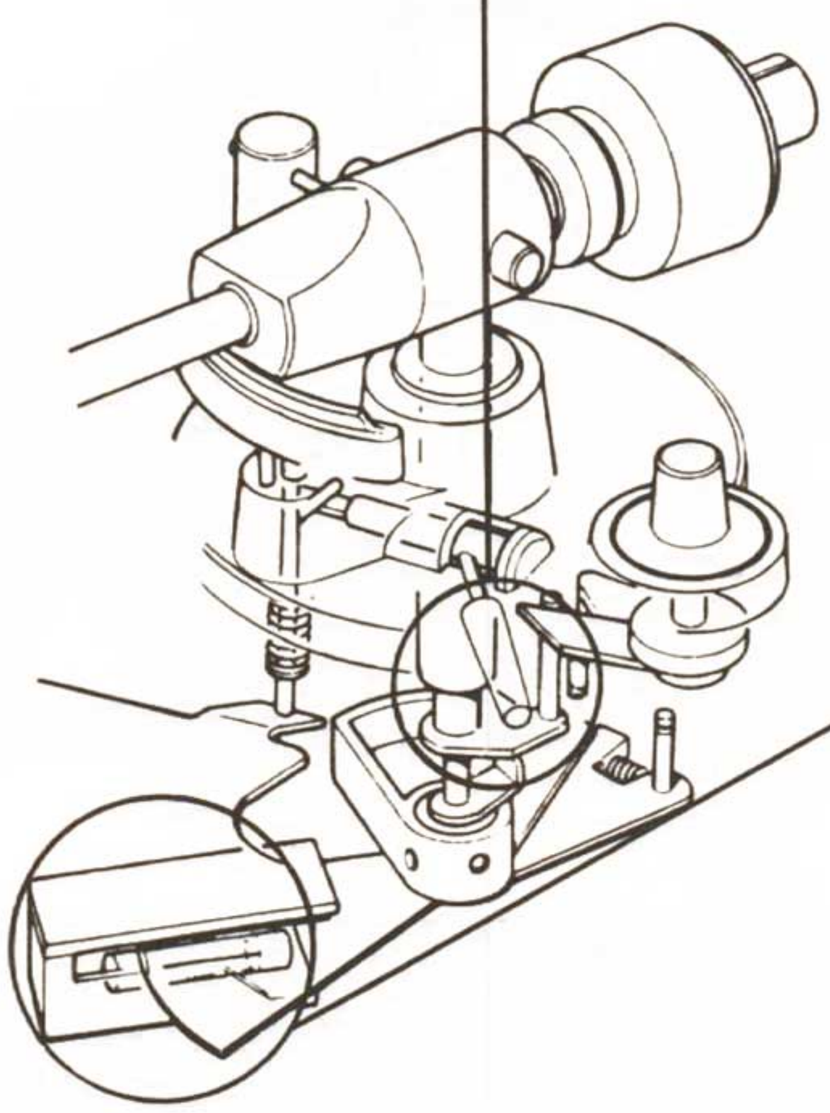

BRAKE DRUM INSTALLATION

1. Install the brake drum at the tonearm shaft and set the tonearm on the tonearm rest.
2. Move the shutter as shown below.

– Top View –

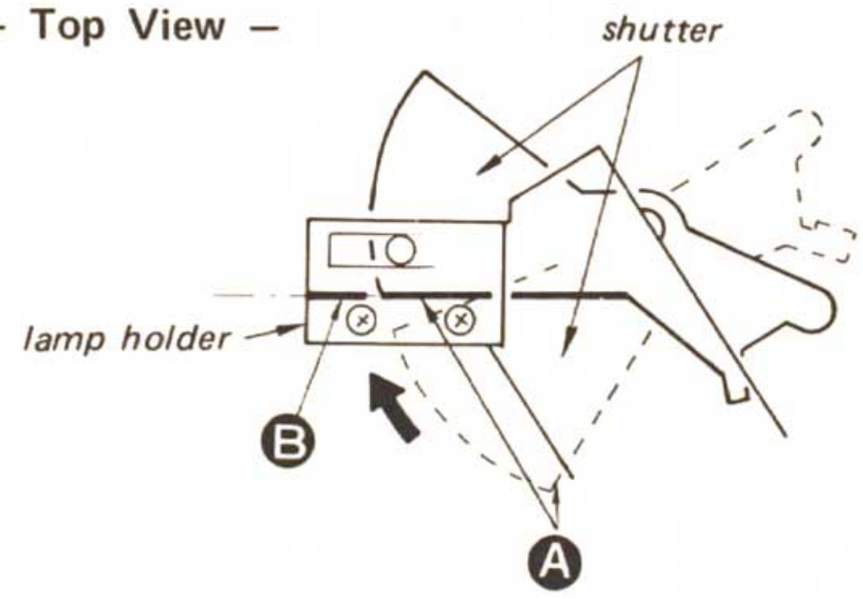

– Side View –

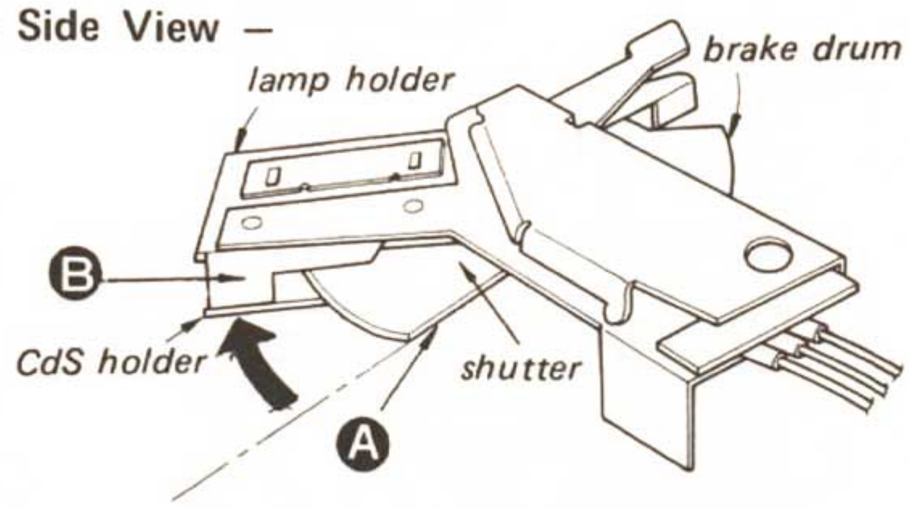

CAUTION:

Confirm that the shutter does not touch the lamp holder and CdS holder.

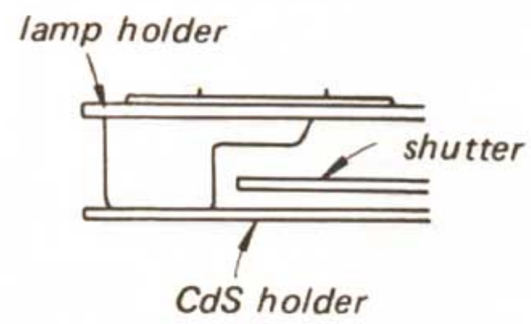

SECTION 3
ADJUSTMENTS

3-1. MECHANICAL ADJUSTMENTS

BRAKE LEVER (A) ADJUSTMENT

1. Set the tonearm on the tonearm rest and turn P 3×20 screw as shown below.
2. Confirm that the tonearm moves smoothly.

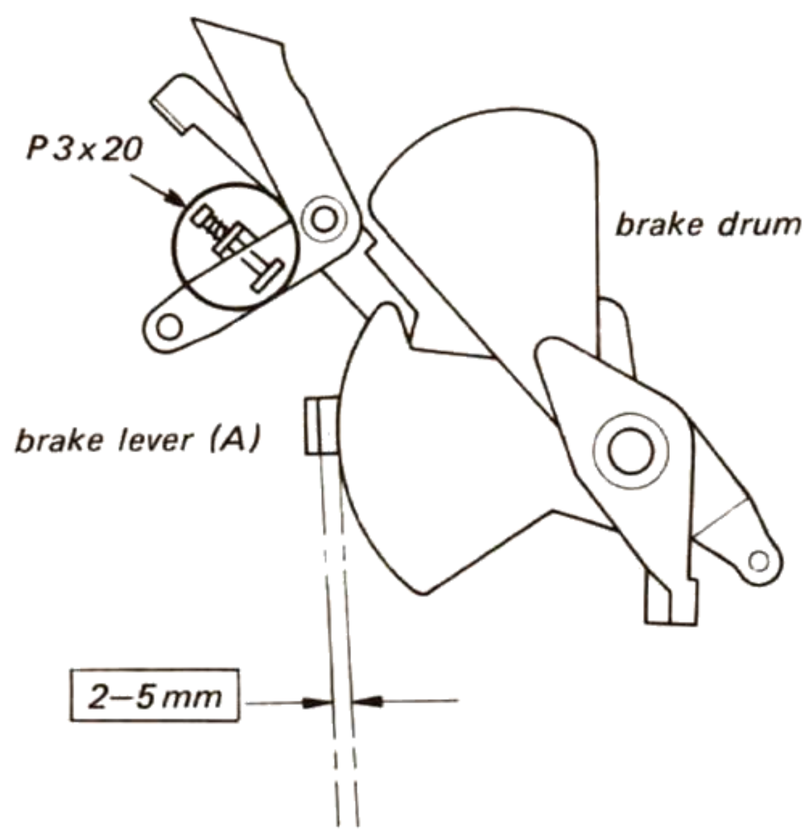

FOOT HEIGHT ADJUSTMENT

Float the turntable horizontally by turning the feet counterclockwise.

Fig. 3-1

TONEARM DROP-POINT ADJUSTMENT

1. Remove the rubber cap.
2. Insert the screwdriver into the hole.
   To change the drop point inward . . . Turn the screw counterclockwise. (A)
   To change the drop point outward . . . Turn the screw clockwise. (B)
3. Once it is properly adjusted with a 30 cm (12″) record, the drop point will be correct for 17 cm (7″) and 25 cm (10″) records as well.

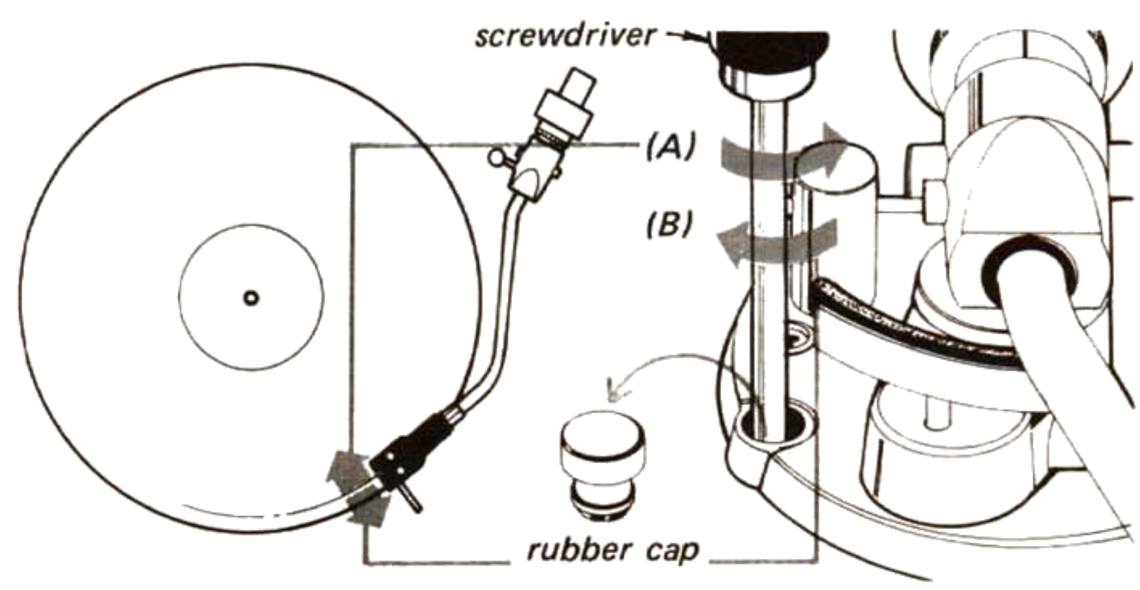

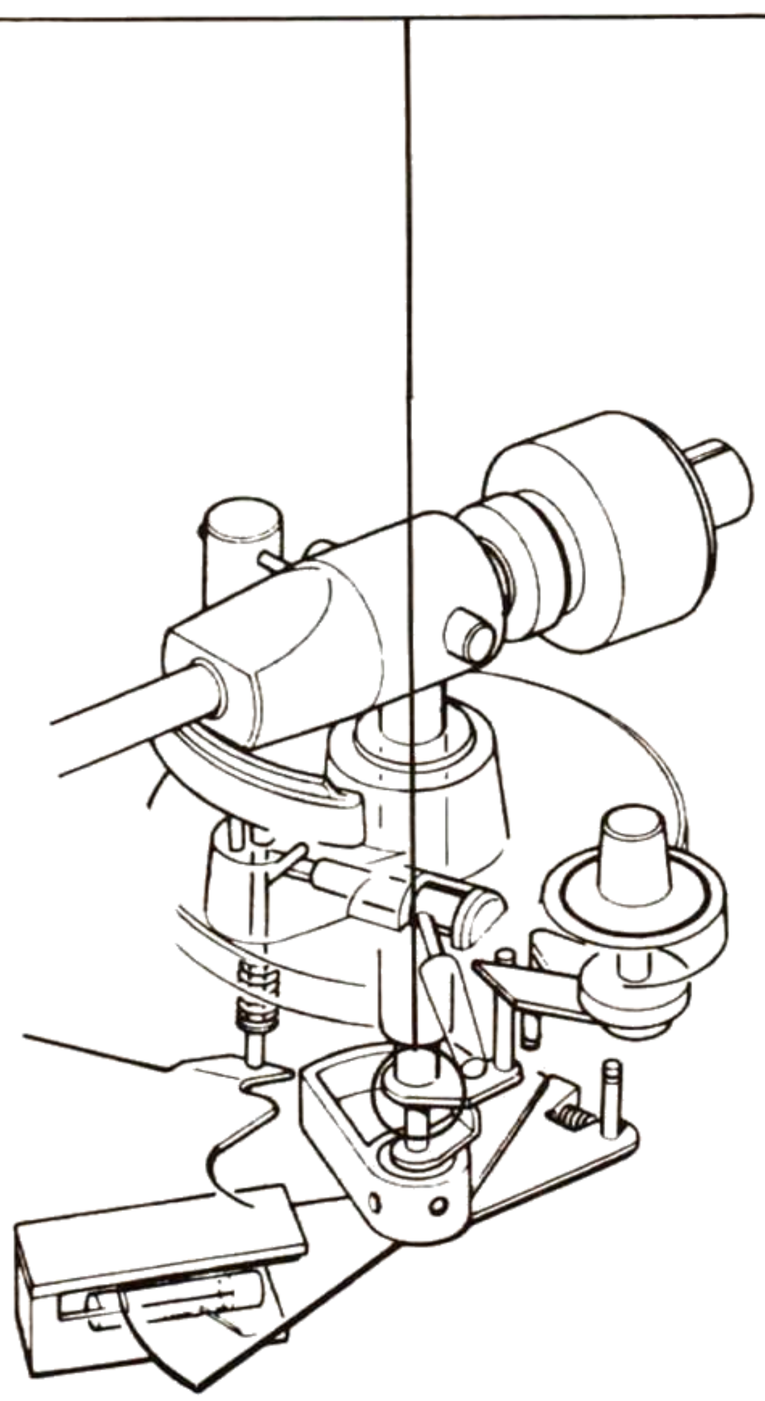

3-2. ELECTRICAL ADJUSTMENT

3-2-1. SPEED DETECTING HEAD OUTPUT ADJUSTMENT

Before the adjustment, set the speed detecting head on the head bracket as shown in Fig. 3-1.

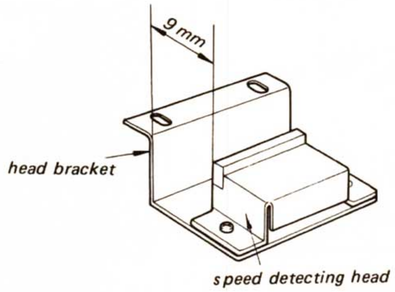

Fig. 3-1

1. Adjust the position of the head bracket by loosening B 3×10 screws (See Fig. 3-2) so that the VTVM reads 14–35 mV (33 rpm) as shown in Fig. 3-3.
2. Confirm that the head does not touch the platter and tighten B 3×10 screws securely.

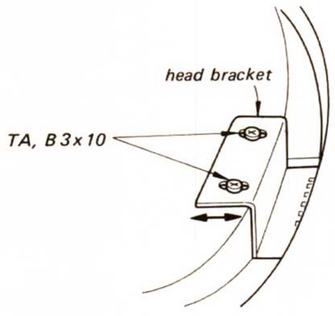

Fig. 3-2

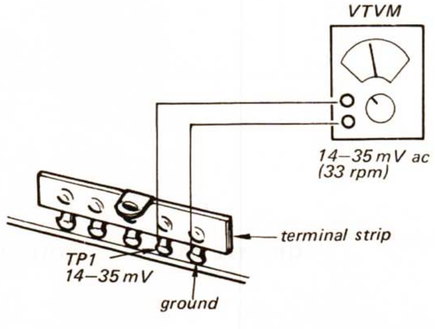

Fig. 3-3

3-2-2. AUTOMATIC RETURN POSITION ADJUSTMENT

1. Connect the VOM across TP4 and ground as shown in Fig. 3-4.
2. Move the tonearm into the turntable center by hand so that the shutter keeps apart from the CdS and lamp holders (See Fig. 3-6).
3. Adjust RV201 so that the VOM reads 2 ± 0.1 V dc.
4. Set the position of the stylus as shown in Fig. 3-5 and turn the adjustment screw so that the VOM reads 4.4 V dc.
5. Confirm that the tonearm returns correctly.

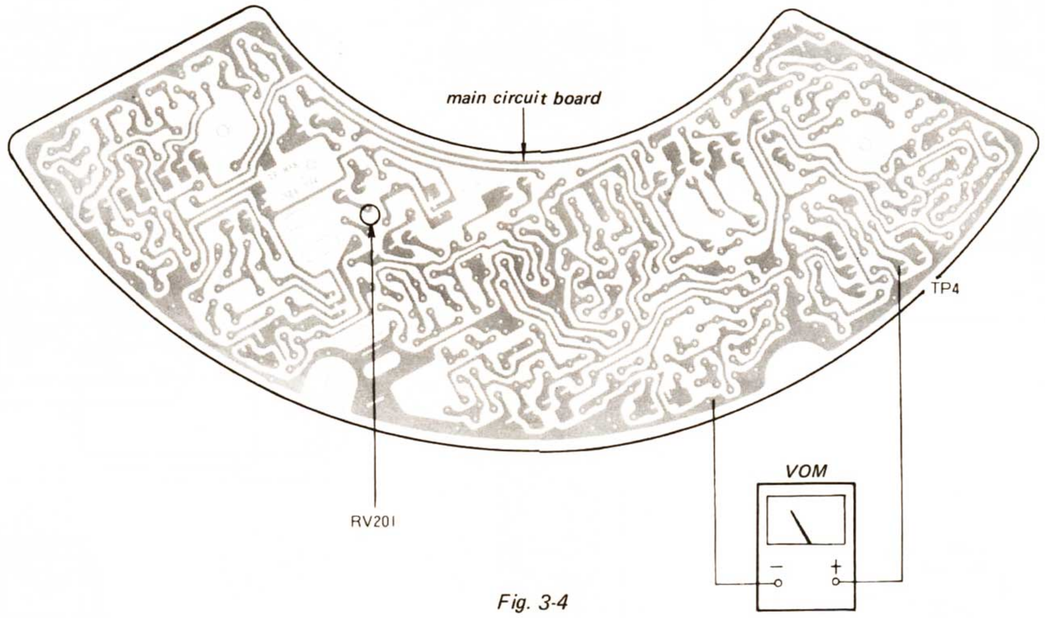

Fig. 3-4

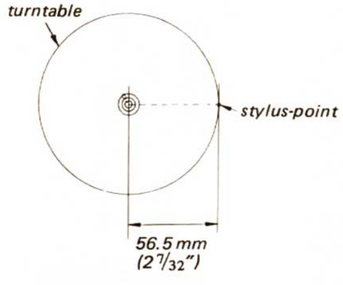

Fig. 3-5

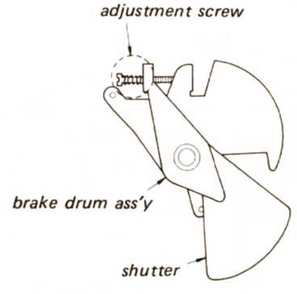

Fig. 3-6

TURNTABLE SPEED ADJUSTMENT

If correct speed cannot be obtained by adjusting the pitch controls, readjust RV101, RV102.

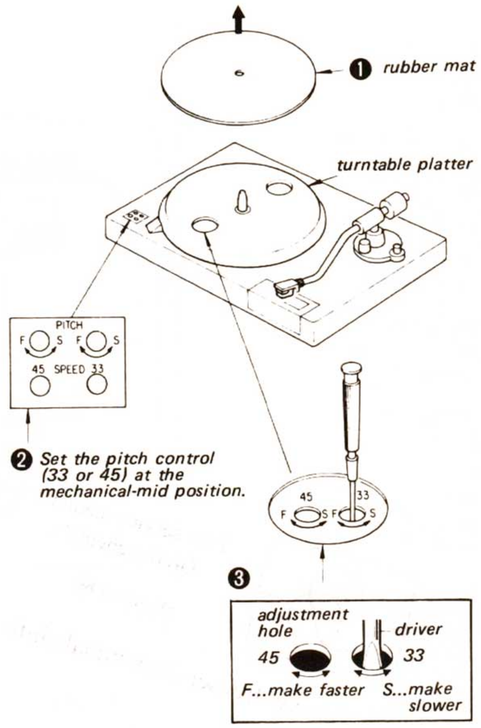

After the adjustment, touch the START/STOP button and confirm that the pattern appears stationary.

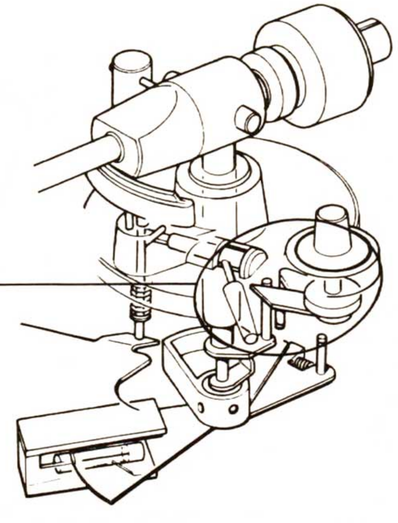

4-1. MOUNTING DIAGRAM

— Conductor Side —

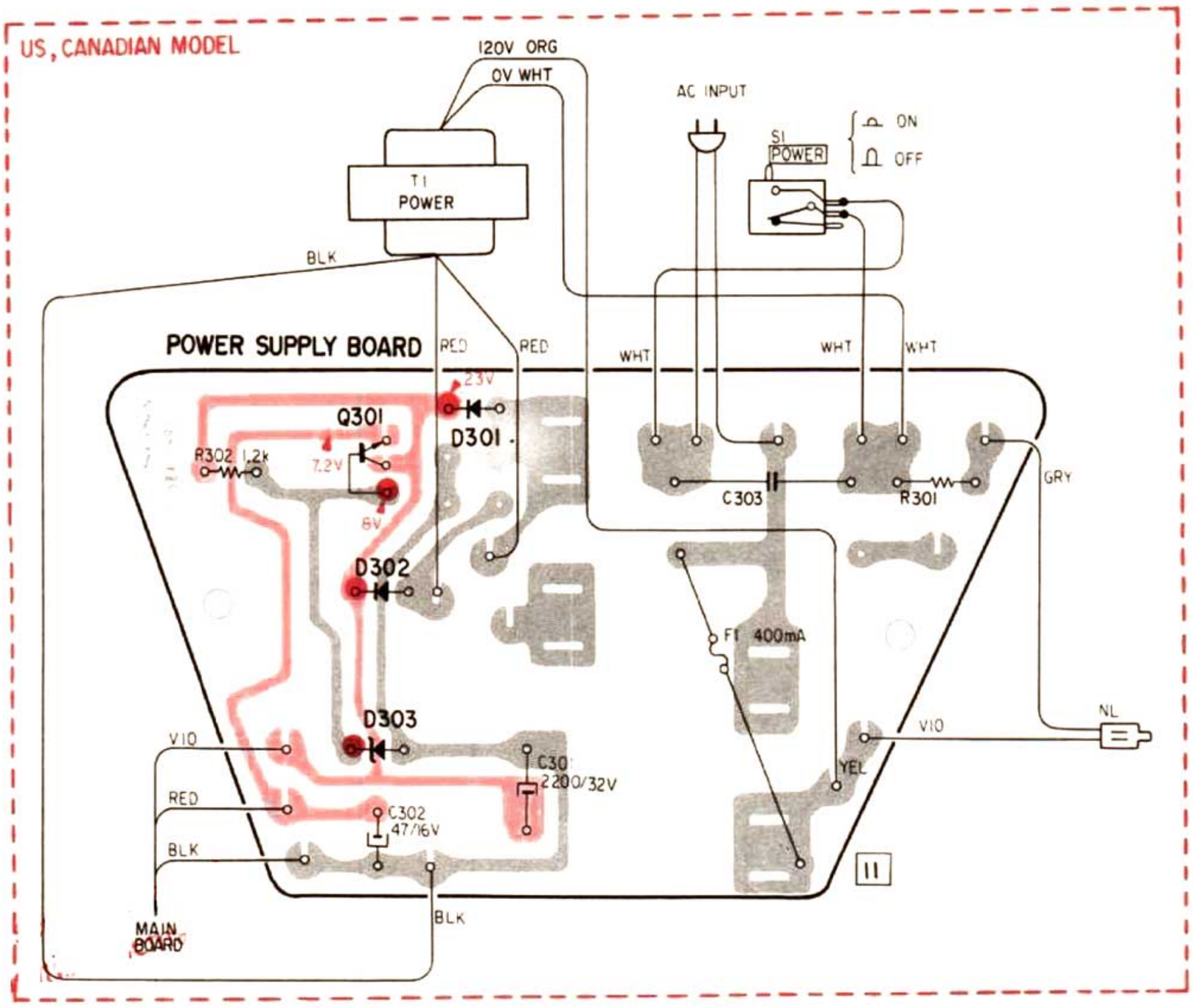

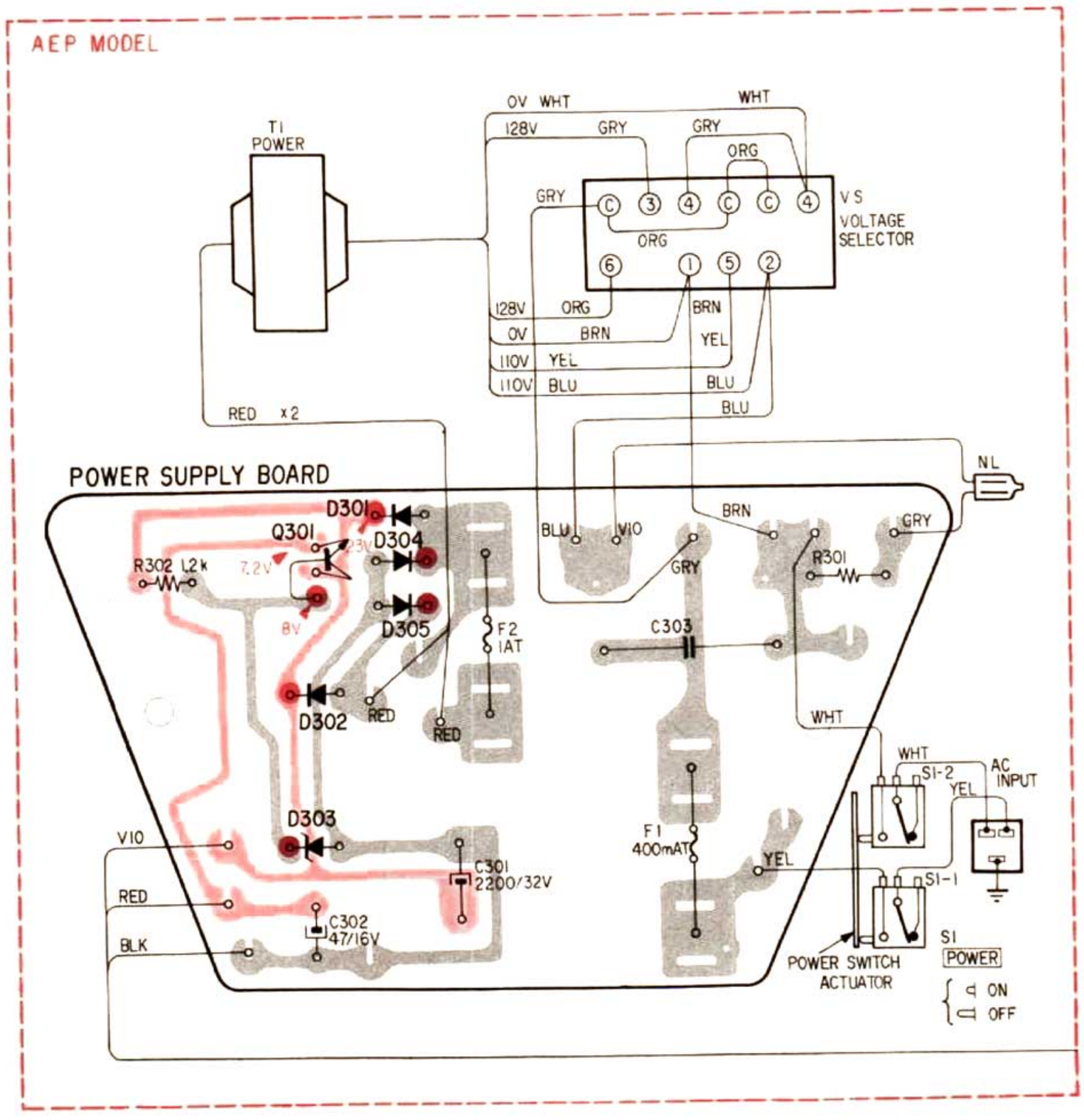

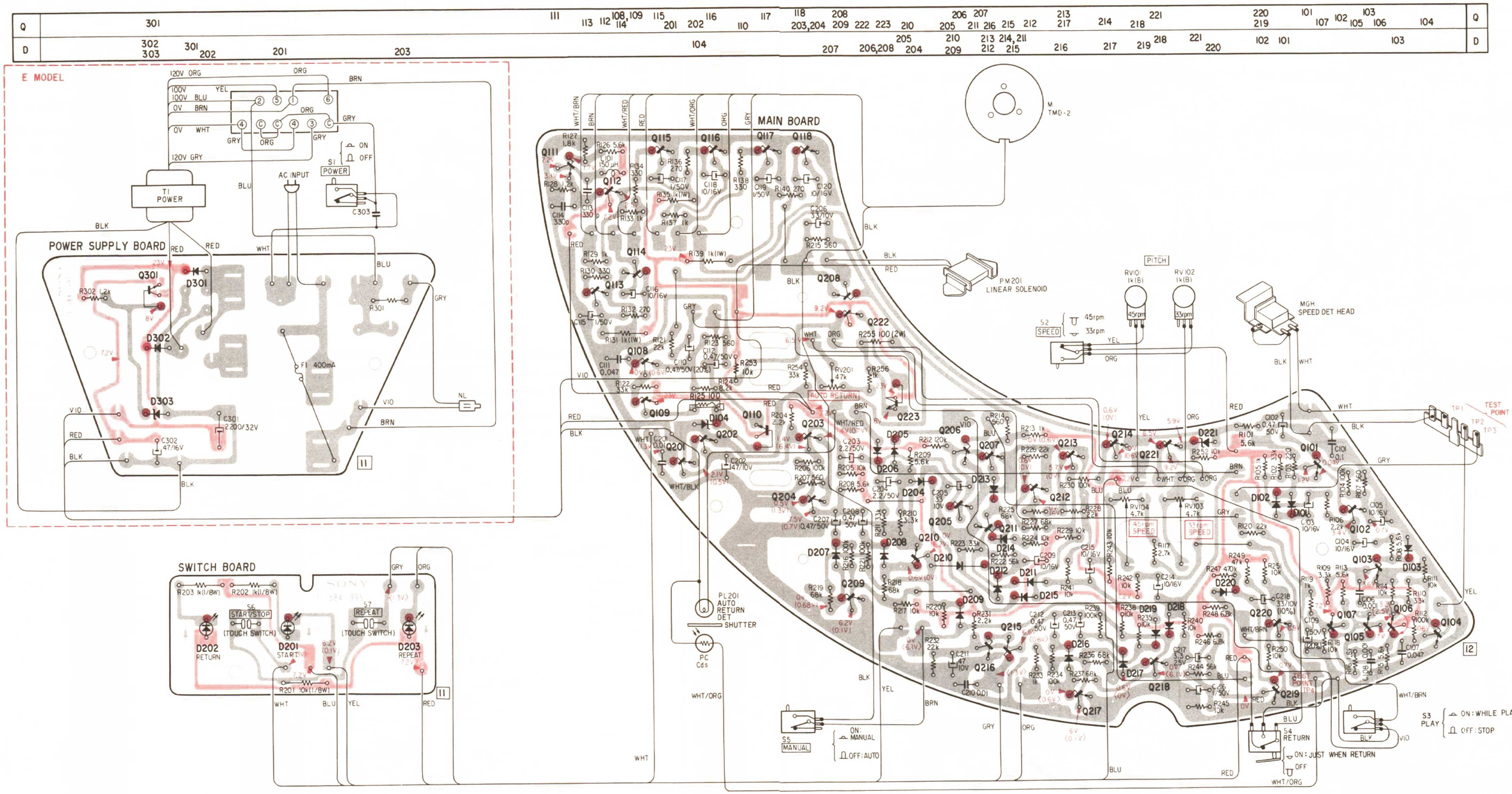

Note:

- : B+ pattern

Q101, 102, 105, 106, Q108, 111~113, 115, Q117, 201~207, Q209~211, 214~222 : 2SC633A

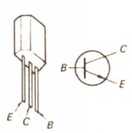

Q103, 104, Q212, 213 : 2SC1363

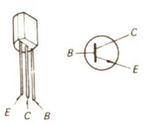

Q107, 109: 2SA677

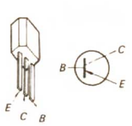

Q110, 223, 301: 2SC1173

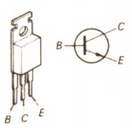

Q114, 116, Q118, 208 : 2SC1383

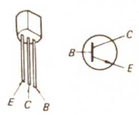

D101~103, D204~222 : 1T40

D104: EQA01-13R
D221: EQA01-06S
D303: EQA01-08S

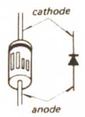

D201~203: SLP24B

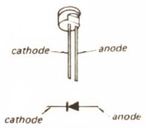

D301, 302, D304, 305 : 10E2

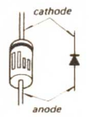

4-2. SCHEMATIC DIAGRAM

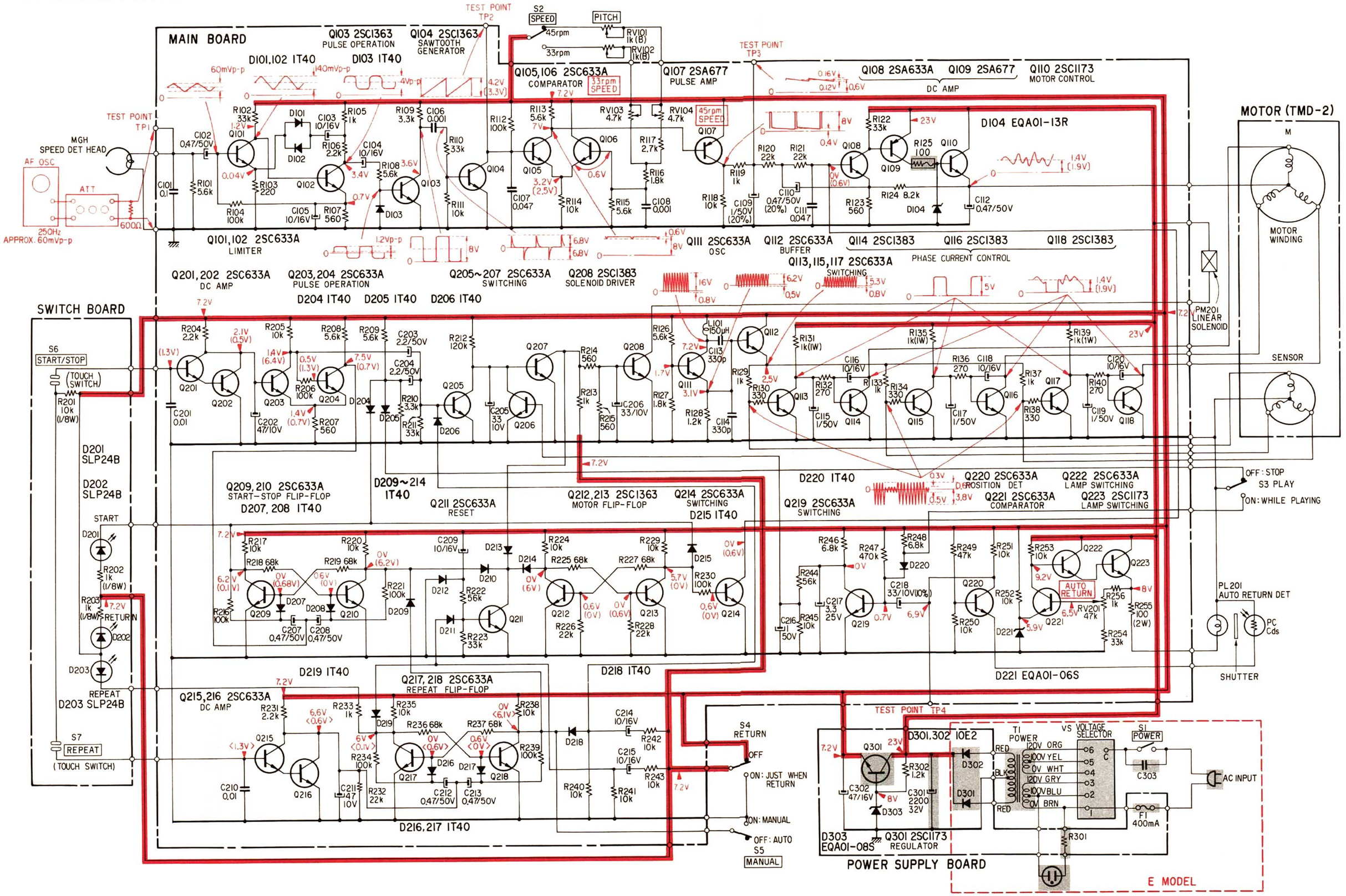

Note: The components identified by shading are critical for safety. Replace only with part number specified.

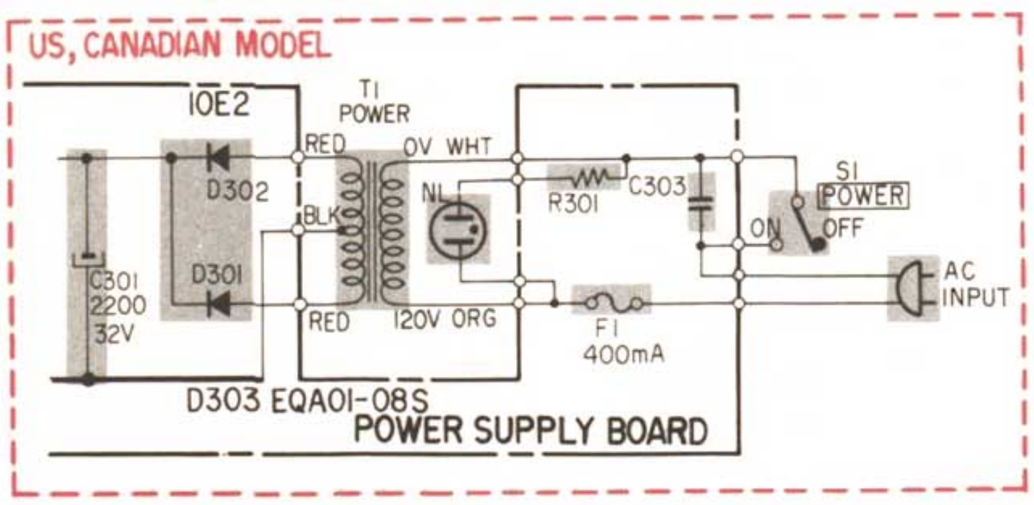

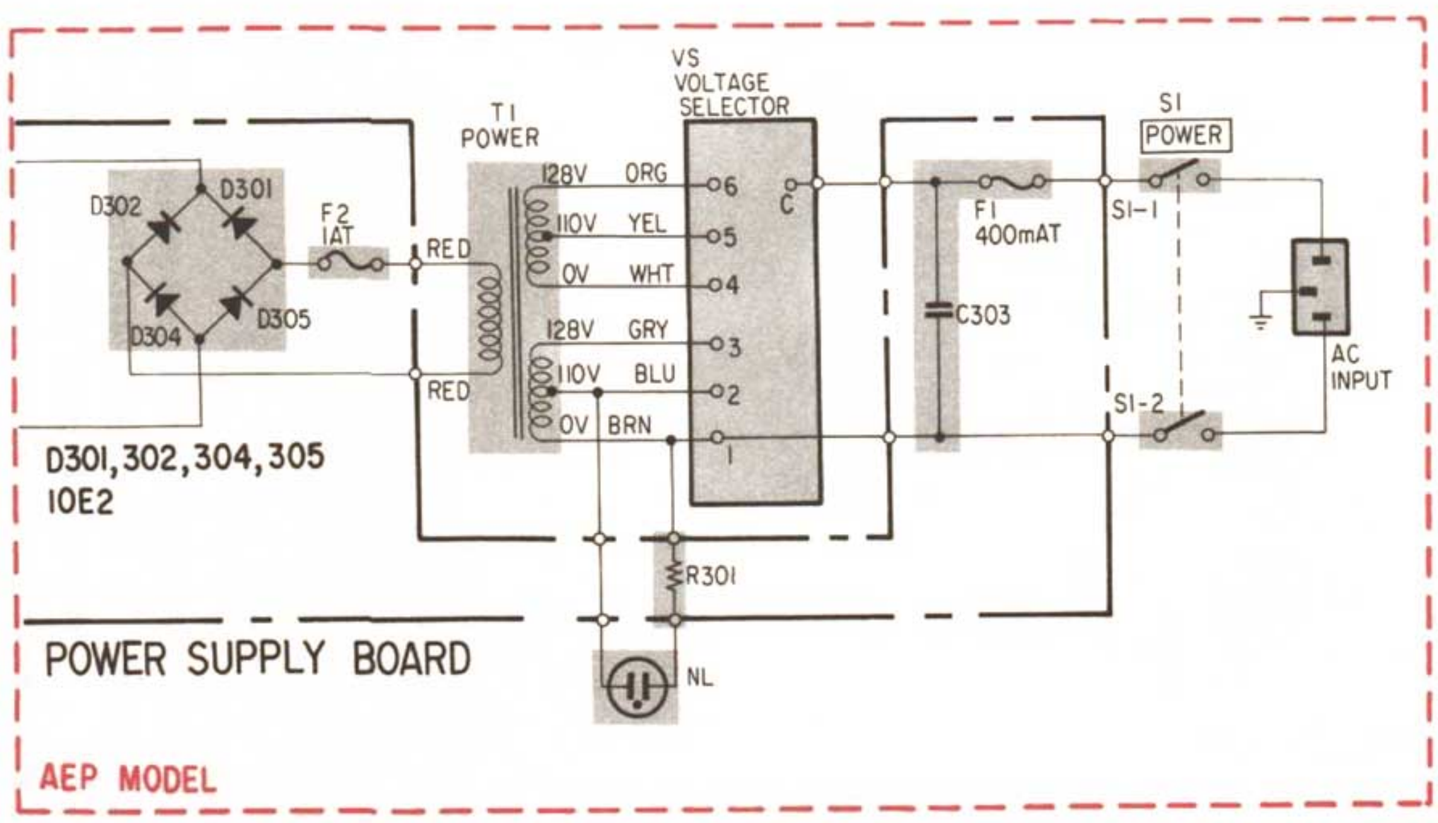

Note:

- All capacitors are in μF unless otherwise noted. 50 or less working voltages are not indicated except for electrolytic type. p = μμF
- % indicates component tolerance.
- All resistors are in Ω, ¼W, unless otherwise noted. k = 1,000 M = 1,000 k
- All variable and adjustable resistors have characteristic curve B, unless otherwise noted.
- indicates chassis ground.
- indicates the connection point marked with on the chassis.
- indicates B+ circuit.
- Voltages are DC with respect to ground unless otherwise noted. Readings are taken under no-signal conditions with a VOM (20 kΩ/V).
- Voltage variations may be noted due to normal production tolerances.

  [ ] : 45 rpm
  ( ) : Measured while touching S6.
  〈 〉 : Measured while touching S7.
- Voltage between base and emitter are measured with 2.5V range.
- Waveforms are measured with oscilloscope.
  Vertical scale: voltage
  Horizontal scale: time
- indicates fusible resistor.
- indicates designation on the panel.
- indicates the adjustment for repair.
- Switch Mode:

Ref. No.	Switch	Position
S1	POWER	OFF
S2	SPEED	45
S3	PLAY	OFF
S4	RETURN	OFF
S5	MANUAL	OFF: AUTO
S6	START/STOP	———
S7	REPEAT	———

MEMO

Note: The components identified by shading are critical for safety. Replace only with part number specified.

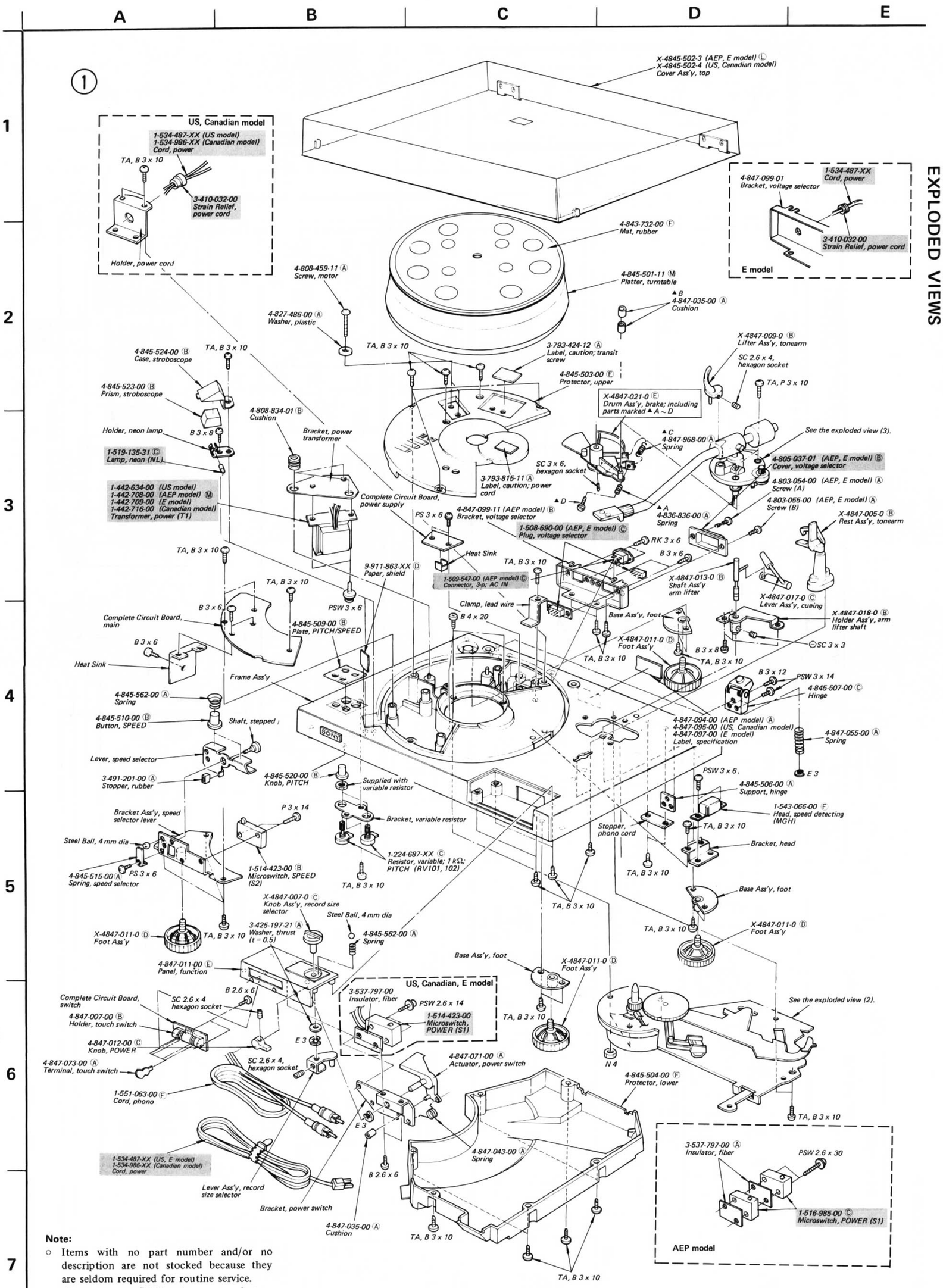

Note:

- Items with no part number and/or no description are not stocked because they are seldom required for routine service.
- All screws are Phillips (cross recess) type unless otherwise noted.
  (–) = slotted head
- The circled letters (Ⓐ to Ⓩ) are applicable for the European model only.

(2)

②

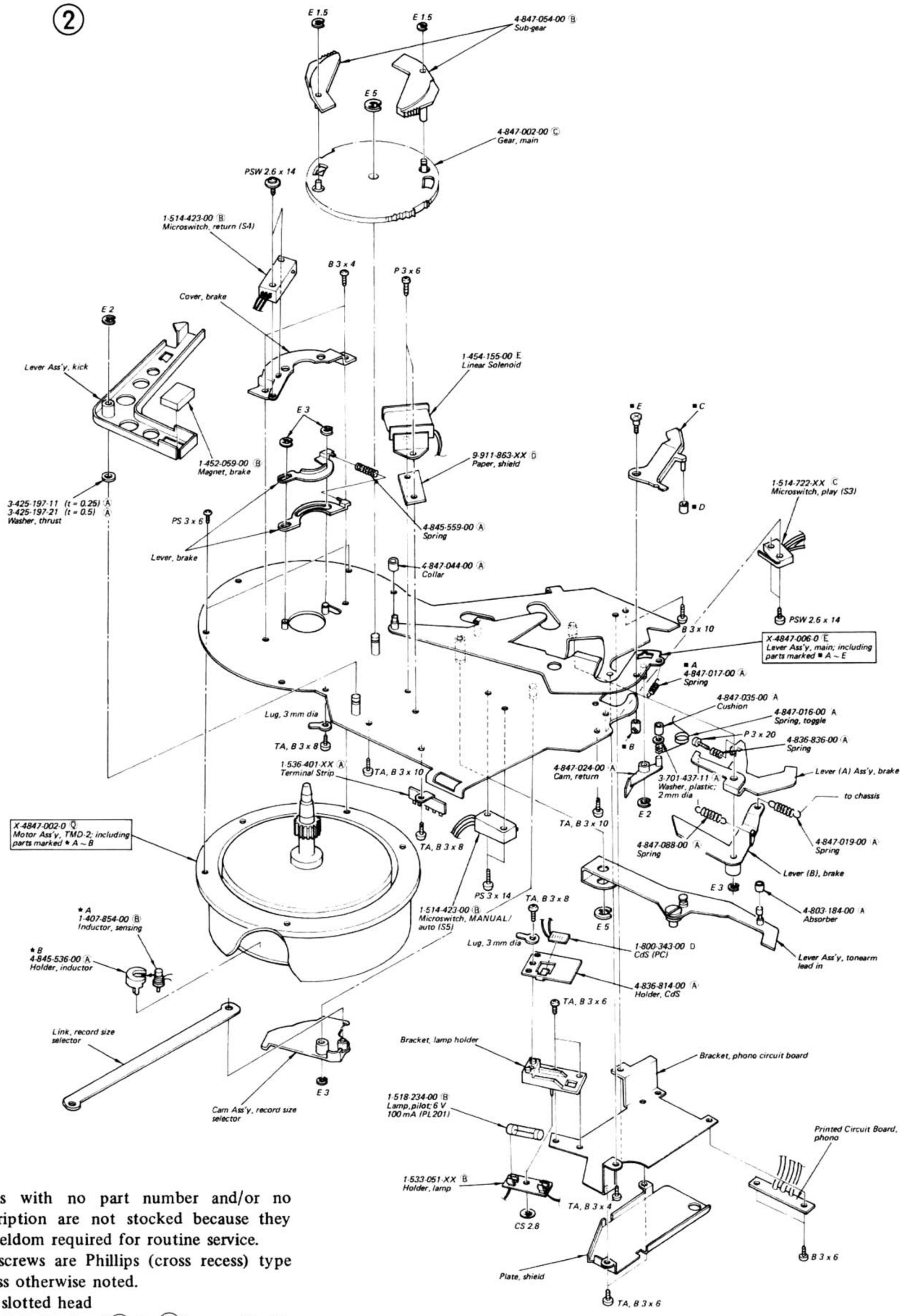

Note:

- Items with no part number and/or no description are not stocked because they are seldom required for routine service.
- All screws are Phillips (cross recess) type unless otherwise noted.
  (-) = slotted head
- The circled letters (Ⓐ to Ⓩ) are applicable for the European model only.

(3)

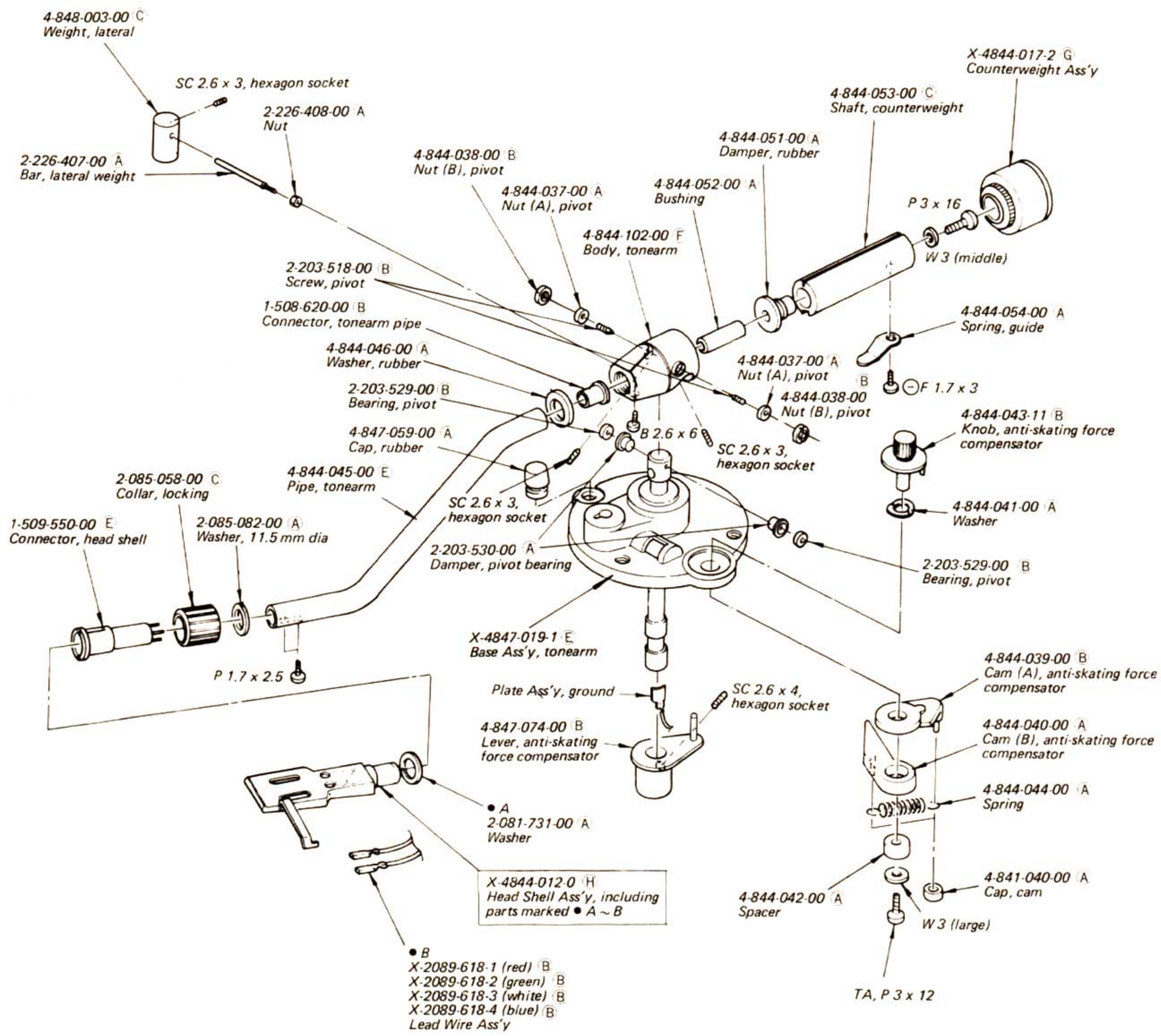

Note:

- Items with no part number and/or no description are not stocked because they are seldom required for routine service.
- All screws are Phillips (cross recess) type unless otherwise noted.
  (–) = slotted head
- The circled letters (Ⓐ to Ⓩ) are applicable for the European model only.

SECTION 6
ELECTRICAL PARTS LIST

Note: The circled letters (Ⓐ to Ⓩ) are applicable for the European model only.

Note: The components identified by shading are critical for safety. Replace only with part number specified.

Ref. No.	Part No.	Description
		SEMICONDUCTORS
		Transistors
⇒ Q101~106		Ⓑ 2SC634A
⇒ Q107		Ⓒ 2SA678
⇒ Q108		Ⓑ 2SC634A
⇒ Q109		Ⓒ 2SA678
Q110		Ⓒ 2SC1173
⇒ Q111~113		Ⓑ 2SC634A
⇒ Q114		Ⓒ 2SC1475
⇒ Q115		Ⓑ 2SC634A
⇒ Q116		Ⓒ 2SC1475
⇒ Q117		Ⓑ 2SC634A
⇒ Q118		Ⓒ 2SC1475
⇒ Q201~207		Ⓑ 2SC634A
⇒ Q208		Ⓒ 2SC1475
⇒ Q209~222		Ⓑ 2SC634A
⇒ Q212,222		Ⓑ 2SC634A
Q223		Ⓒ 2SC1173
Q301		Ⓒ 2SC1173
		Diodes
D101~103		Ⓑ 1S1555
D104		Ⓑ EQB01-13
D201~203		Ⓒ SLP24B
D204~220		Ⓑ 1S1555
D221		Ⓑ EQB01-06
⇒ D301,302		10D2 (US, Canadian, E model)
D303		EQA01-08S
⇒ D304,305		Ⓑ 10E2 (AEP model)
PC	1-800-343-00	Ⓓ CdS
		COILS AND TRANSFORMERS
L101	1-407-171-XX	Ⓐ Microinductor, 150μH
PM101	1-454-155-00	Ⓔ Linear Solenoid
T1	1-442-634-00	Transformer, power (US model)
	1-442-708-00	Ⓜ Transformer, power (AEP model)
	1-442-709-00	Transformer, power (E model)
	1-442-716-00	Transformer, power (Canadian model)
	1-407-854-00	Ⓑ Inductor, sensing

⇒: Due to replacement parts, the descriptions are different from the diagrams.

CAPACITORS

All capacitors are in μF and of electrolytic unless otherwise noted. (p = μμF)
50 and/or less working voltages are not noted except for electrolytic type.

Ref. No.	Part No.	Description		
C101	1-108-290-12	Ⓑ 0.1		mylar
C102	1-121-726-11	Ⓐ 0.47	50V	
C103~105	1-121-651-11	Ⓐ 10	16V	
C106	1-102-074-11	Ⓐ 0.001		ceramic
C107	1-108-595-12	Ⓐ 0.047		mylar
C108	1-102-074-11	Ⓐ 0.001		ceramic
C109	1-121-952-11	Ⓐ 1	50V	
C110	1-121-951-11	Ⓐ 0.47	50V	
C111	1-108-595-12	Ⓐ 0.047		mylar
C112	1-121-726-11	Ⓐ 0.47	50V	
C113,114	1-101-112-11	Ⓐ 330p		ceramic
C115	1-121-391-11	Ⓐ 1	50V	
C116	1-121-651-11	Ⓐ 10	16V	
C117	1-121-391-11	Ⓐ 1	50V	
C118	1-121-651-11	Ⓐ 10	16V	
C119	1-121-391-11	Ⓐ 1	50V	
C120	1-121-651-11	Ⓐ 10	16V	
C201	1-108-278-12	Ⓐ 0.01		mylar
C202	1-121-352-11	Ⓐ 47	10V	
C203,204	1-121-450-11	Ⓐ 2.2	50V	
C205,206	1-121-402-11	Ⓐ 33	10V	
C207,208	1-121-726-11	Ⓐ 0.47	50V	
C209	1-121-651-11	Ⓐ 10	16V	
C210	1-108-278-12	Ⓐ 0.01		mylar
C211	1-121-352-11	Ⓐ 47	10V	
C212,213	1-121-726-11	Ⓐ 0.47	50V	
C214,215	1-121-651-11	Ⓐ 10	16V	
C216	1-121-391-11	Ⓐ 1	50V	

Note: The components identified by shading are critical for safety. Replace only with part number specified.

Ref. No.	Part No.		Description		
C217	1-121-392-11	Ⓐ	3.3	25V	
C218	1-131-195-11	Ⓑ	33	10V	tantalum
C301	1-123-047-11	Ⓑ	2200	32V	
C302	1-121-409-11	Ⓐ	47	16V	
⇒ C303	1-108-750-12	Ⓑ	0.033	250V	mylar

RESISTORS

All resistors are in ohms. Regular-type ¼W carbon resistors are omitted.
Check the schematic diagram for the resistance values. (k = 1000)

R125	1-217-399-11	Ⓑ	100	¼W	fusible
R131,135, R139	1-213-143-11	Ⓐ	1 k	1W	metal-oxide (nonflammable)
R255	1-206-640-11	Ⓐ	100	2W	metal-oxide (nonflammable)
R301	1-213-154-11		8.2 k	1W	metal-oxide (nonflammable) (E model)
	1-213-155-11	Ⓐ	10 k	1W	metal-oxide (nonflammable) (AEP model)
	1-213-156-11		12	1W	metal-oxide (nonflammable) (US, Canadian model)
RV101,102	1-224-687-XX	Ⓒ	1 k, variable; PITCH		
RV103,104	1-224-644-XX	Ⓑ	4.7 k, adjustable		
RV201	1-224-254-XX	Ⓒ	47 k, adjustable		

SWITCHES

S1	1-514-423-00		Micro, POWER (US, Canadian, E model)
	1-516-985-00	Ⓒ	Micro, POWER (AEP model)
S2	1-514-423-00	Ⓑ	Micro, SPEED
S3	1-514-722-XX	Ⓒ	Micro, play
S4,5	1-514-423-00	Ⓑ	Micro, return; MANUAL/auto

⇒: Due to replacement parts, the descriptions are different from the diagrams.

Note: The circled letters (Ⓐ to Ⓩ) are applicable for the European model only.

Ref. No.	Part No.		Description

FUSES

F1	1-532-066-00	Ⓐ	400 mAT (AEP model)
	1-532-317-00		400 mA (US, Canadian model)
	1-532-461-XX		400 mA (E model)
F2	1-532-078-00	Ⓑ	1AT (AEP model)

MISCELLANEOUS

MGH	1-543-066-00	Ⓕ	Head, speed detecting
NL	1-519-135-31	Ⓒ	Lamp, neon
PL201	1-518-234-00	Ⓑ	Lamp, pilot; 6V 100 mA
	1-452-059-00	Ⓑ	Magnet, brake
	1-508-620-00	Ⓑ	Connector, tonearm pipe
	1-508-690-00	Ⓒ	Plug, voltage selector (AEP, E model)
	1-509-547-00	Ⓒ	Connector, 3-p; AC IN (AEP model)
	1-509-550-00	Ⓕ	Connector, head shell
	1-533-051-XX	Ⓑ	Holder, lamp
	1-534-487-XX		Cord, power (US, E model)
	1-534-986-XX		Cord, power (Canadian model)
	1-536-401-XX	Ⓐ	Terminal Strip
	1-551-063-00	Ⓕ	Cord, phono

Note: The circled letters (Ⓐ to Ⓩ) are applicable for the European model only.

ACCESSORIES AND PACKING MATERIALS

Part No.	*Description*
X-4845-514-1	C Sub-weight Ass'y
2-054-619-00	Ⓐ Spacer (t2), cartridge
2-054-624-00	Ⓑ Screw (large), cartridge
2-054-625-00	Ⓐ Screw (small), cartridge
2-227-313-00	Ⓐ Spacer (t0.5), cartridge
3-701-438-21	Ⓐ Washer, plastic; 2.5 mm dia.
3-701-806-01	Ⓐ Adaptor, 45 rpm
3-780-922-11	Ⓔ Manual, instruction (AEP, E model)
3-780-922-21	Manual, instruction (US, Canadian model)
3-793-395-13	Ⓑ Gauge, overhang adjustment
4-815-655-00	Ⓐ Nut, cartridge
4-838-319-00	Ⓐ Screw (middle), cartridge
4-844-060-00	Ⓒ Bag, plastic; unit
4-845-557-00	Ⓒ Cushion, side
4-845-560-00	Ⓐ Sheet, protection; top cover
4-845-567-00	Ⓑ Spacer
4-847-092-00	Ⓐ Screwdriver
4-848-004-00	Ⓕ Carton
4-848-005-00	Ⓒ Holder (A), accessories
4-848-006-00	Ⓑ Holder (B), accessories
4-849-790-00	Ⓑ Bag, plastic; turntable
9-911-851-XX	Ⓔ Cushion (t3), tonearm pipe

9-958-353-00

Sony Corporation

1976

6G0666-1
Printed in Japa

FULL AUTOMATIC STEREO TURNTABLE SYSTEM

PS-4300

US Model
Canadian Model
AEP Model
E Model

SUPPLEMENT

No. 1
June, 1977

Subject: Circuit Description and Mechanical Description (Automatic Operation Mechanism)

File this supplement with the service manual.

SONY®
SERVICE MANUAL

1. TIMING CHART IN EACH OPERATION

1-1. Operation when the START/STOP button (S6) is touched during the playing of a record.

(Refer to P.8)

1-2. Operation when the START/STOP button (S6) is touched during lead-in of the tonearm.

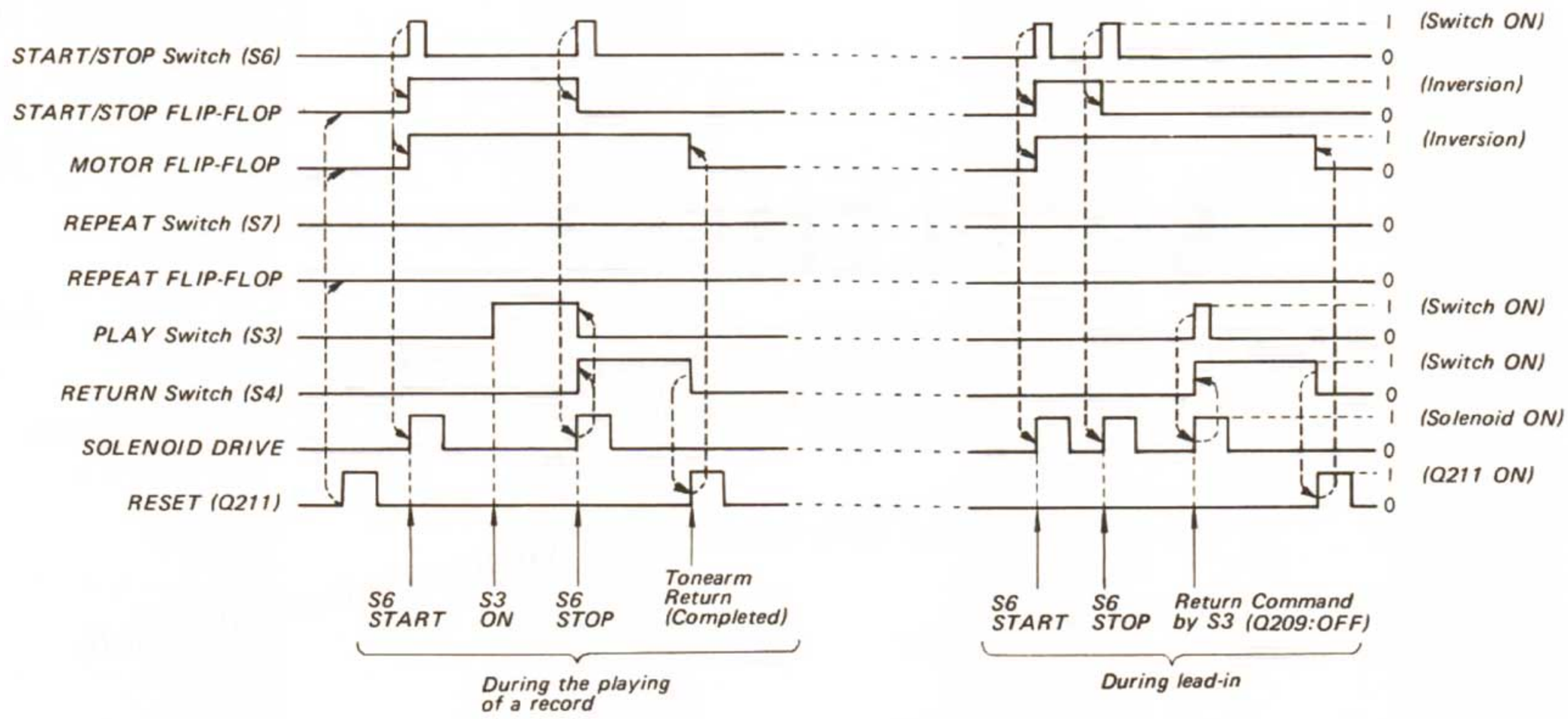

1-3. REPEAT Operation (Refer to P.8)

1-4. Auto-Return Operation (Refer to P.7)

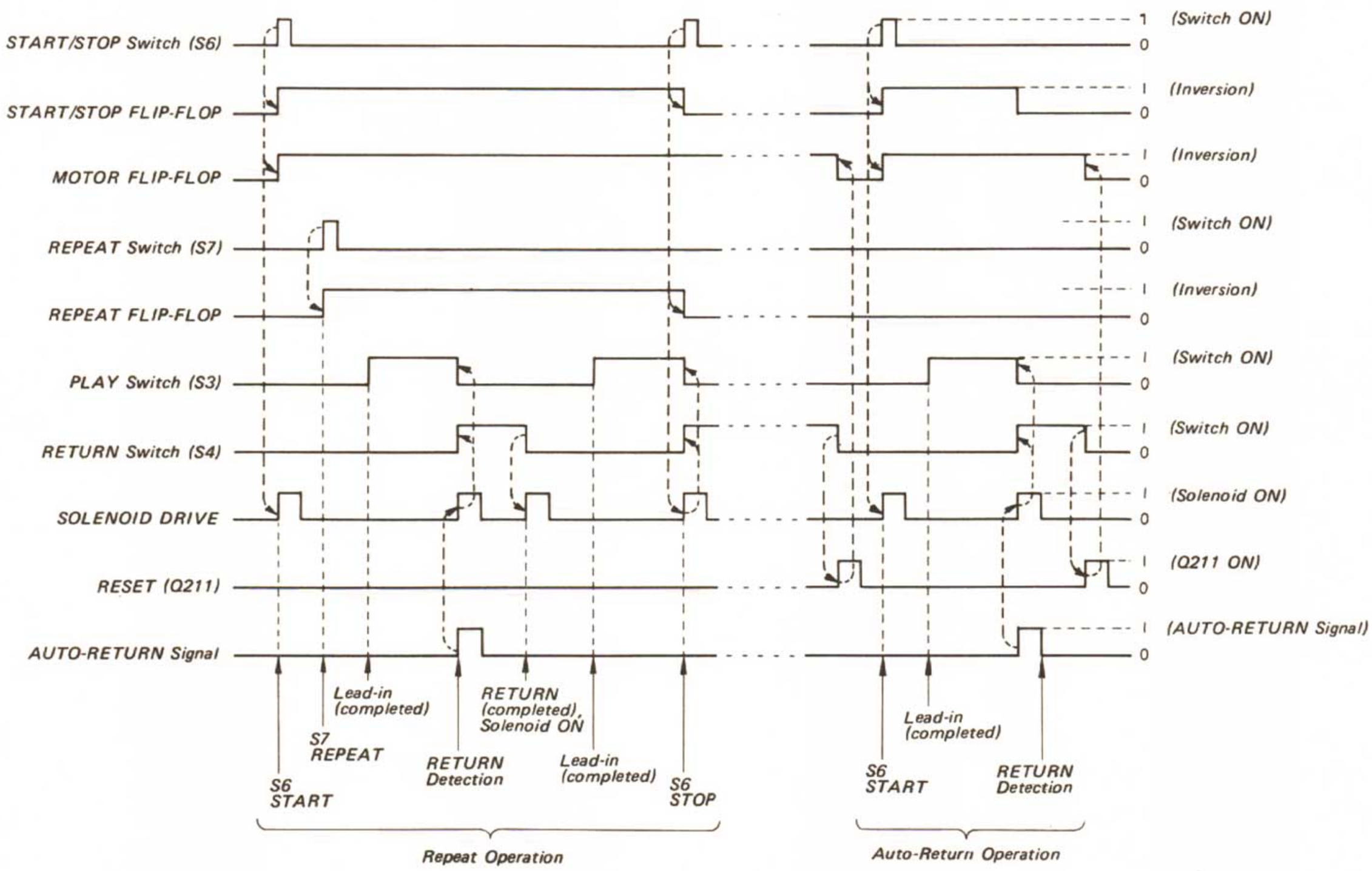

2. CIRCUIT DESCRIPTION

The PS-4300 features a DC servo amplifier circuit to maintain turntable rotation at a constant speed, and a system control circuit which turns the motor and solenoid (PM201) ON and OFF, thus driving the mechanism required for automatic lead-in, return, and repeat actions.

2-1. SERVO AMPLIFIER CIRCUIT

The servo amplifier circuit is the same as that used in the PS-3750. Note, however, that the center motor shaft has been lengthened for full automatic mechanism, and that a center gear has also been added to this shaft.

The principles of the DC servo amplifier circuit are outline in Fig. 2-1.

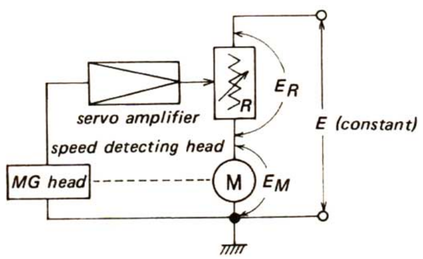

Fig. 2-1.

The rotational speed of the motor is determined by the voltage E_M applied across the motor. Since E (constant) = $E_M + E_R$, motor speed will be changed by the value of E_R, i.e., the changing value of R.

If the motor speed varies from a fixed central value due to external influences, corresponding changes in the value of R will maintain motor speed at a constant rate. Speed changes in the PS-4300 are detected by the MG head mounted in the turntable frame. (Opposing S-N magnets mounted with high degree of precision in the outer circumference of the turntable platter). Frequencies detected by this head are 284 Hz at 33 rpm, and 384 Hz at 45 rpm. Changes in these frequencies are converted into electrical changes, which then change the value of R, by the servo amplifier.

As Fig. 2-2 shows, R is not an actual resistor; the changes in impedance between the collector and emitter of a transistor are utilized instead. And since this impedance Z, is changed by the voltage applied to the base of the transistor, all that is required to maintain constant motor speed, is a means of varying base voltage in proportion to speed changes.

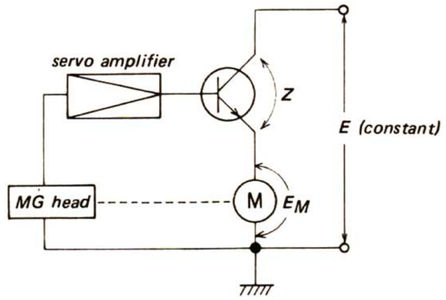

Fig. 2-2.

When Motor is Started Up (see Fig. 2-4)

1. When the power switch is turned ON, Q104 is still OFF since no MG head output has yet arrived at Q101. C107 is charged up via R112.
2. Q105 is turned ON when the charging voltage (Q105 base voltage) exceeds $+V_{BE}$ (Q105 emitter voltage).
3. Consequently, Q107–Q110 are all turned ON, the motor power supply voltage is applied directly, and the motor commences to rotate immediately.
4. If ripple voltage is allowed to flow to the motor at this time, hum would occur, but this is prevented by D104.

Limiter Circuit (Q101 and Q102) (see Fig. 2-4)

1. Once the turntable starts to rotate, the MG head produces an output signal.
2. Although the MG head output is almost a perfect sine wave, some level variations do occur. If these exceed a certain level, the sine wave is passed through the circuit consisting of Q102 and Q101, the diodes D101 and D102, and C103, where it is changed into a constant level square waveform.

Waveform Shaping Circuit (Q103 and D103) (Fig. 2-4)

1. Since the Q102 output waveform is still not perfectly square, it is amplified again at Q103 to produce a perfect square wave. The purpose of D103 is to keep the base voltage of Q103 at ± 0.6 Vp-p.
2. Insertion of the Q101–Q103 limiter circuit is to prevent accidental detection of AM fluctuations as speed changes (FM fluctuations).

Differential Circuit (C106, R110, R111) (Fig. 2-4)

In order for the square waveform appearing at the collector of Q103 to trigger the sawtooth wave generator transistor Q104 in the next stage, it has to be changed to a differential waveform. This occurs in the differential circuit (C106, R110, R111).

Sawtooth Wave Generator Circuit (Q104, C107, R112) (Fig. 2-4)

1. When Q104 is OFF, C107 is charged up via R112. The ⊕ part of the differential waveform from the differential circuit turns Q104 ON, resulting in the immediate discharge of C107. The collector voltage of Q104 is then rapidly reduced to 0.
2. With the arrival of the non-positive part of the differential waveform, Q104 is turned OFF. Consequently, C107 charges up again in the manner shown in Fig. 2-3.

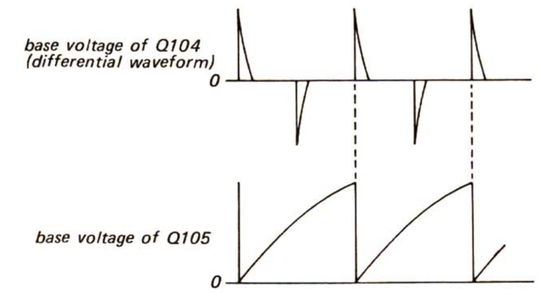

Fig. 2-3.

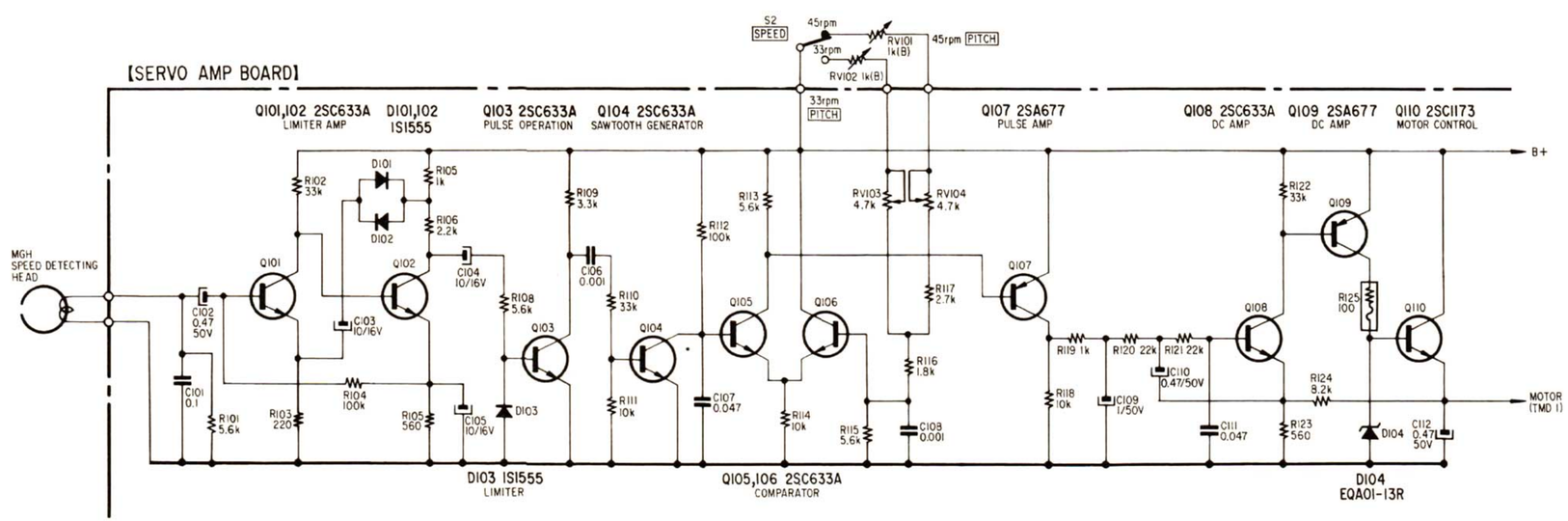

Fig. 2-4.

Comparator Circuit (Q105, Q106) (Fig. 2-4)

1. The sawtooth waveform then arrives at the comparator circuit (Q105 plus Q106). The base of Q106 is biased by a basic voltage (which has be divided into B⊕ by means of RV102, RV103 (or RV101, RV104 at 45 rpm), R115 and R116. The emitter voltage of Q105 is consequently held fixed by this basic voltage, so Q105 will turn ON when the base voltage (sawtooth wave) exceeds the emitter voltage $+V_{BE}$. So during the period when the basic voltage (emitter voltage) $+V_{BE}$ is exceeded, a negative plus appears on the collector side of Q105.
2. Consequently, if the motor rotation slows down, the sawtooth wave frequency will decrease, thus increasing the period during which Q105 stays ON. The output pulse width is thus expanded. If on the other hand, the motor rotation speeds up, the sawtooth wave frequency will increase, thus decreasing the Q105 ON period, and resulting in contraction of the output pulse width.

Pulse Amplifier Circuit (Q107) (Fig. 2-4)

Besides amplifying the pulse, Q107 also operates as a phase converter providing positive pulses for the next stage.

Smoothing Circuit (Low-pass Filter) (Q108, R119, C109, R120, R121, C110, C111) (Fig. 2-4)

These two filters, one formed by R119 and C109, and the other by Q108, R120, R121, C110 and C111, act as a differential circuit converting the input signal arriving at this stage, into a DC voltage in proportion to pulse width.

DC Amplifier Circuit (Q108, Q109) (Fig. 2-4)

Q108 and Q109 make up the DC amplifier circuit which amplifiers the DC output signal from the previous low-pass filter. (Q108 also forms part of the low-pass filter).

Control Transistor (Q110) (Fig. 2-4)

The impedance between emitter and collector of Q110 is changed by the amplified DC voltage, thus controlling the voltage applied across the motor.

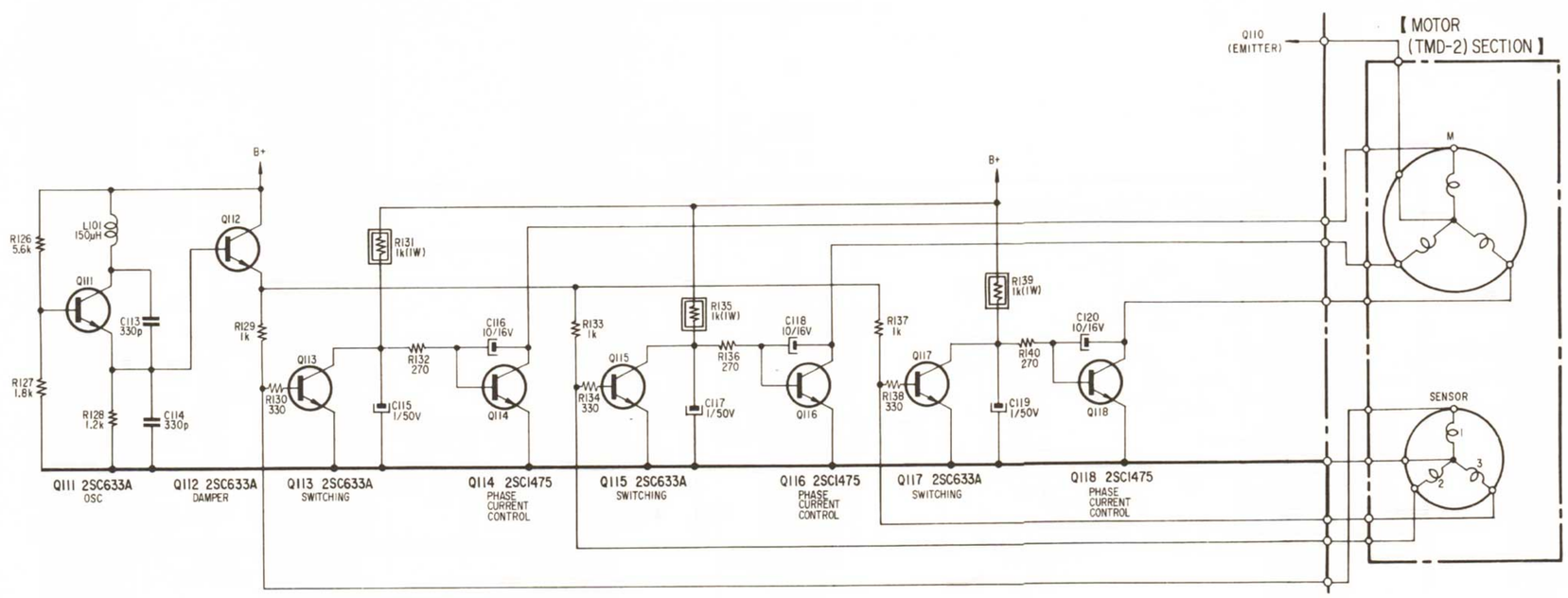

Fig. 2-5.

Operation of Servo Mechanism (Fig. 2-4)

If the motor speed is increased, or decreased, by even the slightest amount, above or below a specific value, the servo circuit is activated in the following manner in order to restore motor speed to the specific value.

1. When motor speed is increased, the frequency of the signal produced by the MG head becomes high, resulting in a reduction of the Q104 ON period, and contraction of the Q107 collector output pulse width.
2. The DC output signal from the low-pass filter consequently decreases, and the collector – emitter impedance of the control transistor increases, thus reducing the voltage across the motor terminals. Motor speed is therefore returned to normal speed.
3. When motor speed decreases, exactly the opposite process results in corrective speed up action.

Speed Selector Switch (Fig. 2-4)

1. The switching action is achieved by changing the basic voltage by means of a voltage divider resistor connected to the Q106 base circuit.
2. This basic voltage has been set lower for 45 rpm than for 33 rpm.
3. Therefore, when switching from 33 rpm to 45 rpm, the Q107 collector output pulse width is widened, thus increasing the low-pass filter output level. The Q110 collector – emitter impedance is consequently decreased, and the motor speed increased. When the speed increases to a certain level, the servo circuit is re-activated to stabilized motor speed again.
4. When switching from 45 rpm back to 33 rpm, motor speed is slowed down by the reverse process.

Phase Switching Circuit (Fig. 2-5)

Since the PS-4300 incorporates the BSL (brushless and slotless) motor, switching elements are required in place of the brushes. And since it is also a bi-polar 3-phase motor, use is made of the rotor magnet's N pole edge leakage flux. Consequently, motor saturation inductance (1, 2, 3) is saturated by this flux at every 120° of rotation.

A signal of approximately 1 MHz is produced by the Colpits oscillator (Q111), and then applied via the damper emitter – follower (Q112) to the resistor plus saturation inductance series circuit (R129 and 1, R133 and 2, R137 and 3). Inductance consequently varies in level by about 5 times during the saturation/non-saturation period. This means that the voltage across both ends of the saturation inductance also varies in level by about 5 times.

If voltage is set to above 0.6 V during the non-saturated period, but below 0.6 V during the saturated period, and the saturation inductance connected to the bases of Q113, Q115 and Q117, these transistors will be turned OFF during 120° of rotation, but turned ON for the remaining 240°.

If the phase switching transistors Q114, Q116 and Q118 are driven by the collector voltage, each of the phases will be turned ON in turn with each successive 120° of rotation, thus rotating the motor.

2-2. SYSTEMS CONTROL CIRCUIT

This circuit includes a return position detector circuit, plus 3 separate flip-flops:– a start-stop flip-flop (Q209, 210), a repeat flip-flop (Q217, 218), and a motor flip-flop (Q212, 213).

1. Operation when power switch turned ON. (see Fig. 2-6)

1. When the power switch is turned ON, C209 is charged up, and Q211 turned ON. (1 and 2 in Fig. 2-6).
2. Once Q211 is turned on, currents flow through D210, D214 and D209 (3, 4 and 5 in Fig. 2-6), resulting in the resetting of each of the flip-flops (i.e., Q210, Q212 and Q218 are turned ON, and Q209, Q213 and Q217 turned OFF). This situation thus maintains circuit stability.
3. Since Q214 is also turned ON, the Q108 base is grounded. The motor will not start because Q108, Q109 and Q110 are OFF.
4. And since Q207 is turned ON by the bias applied by the charge on C205, resulting in Q208 being turned OFF, nor will the solenoid be activated.

2. Operation for auto-start (see Fig. 2-7)

When the START/STOP switch is turned on–

1. A negative trigger signal is generated on the collector of Q204 (which forms part of a Schmitt trigger circuit). This signal passes via C207 and C208 to invert the Q209, Q210 start-stop flip-flop. That is, Q209 is turned ON, and Q210 turned OFF. The same instant that Q209 is turned ON, the START indicator (LED) D201 lights up (1 in Fig. 2-7). As a result of the current (2 in Fig. 2-7) flowing through D215, the Q213 collector potential will drop, thus resulting in the inversion of the motor flip-flop Q212, Q213 (Q212 is turned OFF, and Q213 turned ON). Q214 is consequently turned OFF, thus starting the motor. (See current flow 3 in Fig. 2-7.)
2. A positive trigger signal is generated on the collector of Q203. This signal passes C203, and is applied to the base of Q205 which is thus turned ON. (See current 4 in Fig. 2-7.) With Q205 being turned ON, C205 will discharge, Q207 turns OFF, and Q208 turns ON. Current thus flows to the solenoid, which consequently activates the mechanism. Tonearm automatically lowers itself onto the record. (See current 5 in Fig. 2-7.)

3. Operation for auto-return (see Fig. 2-6)

1. When the power switch is turned ON, and Q222 and Q223 turned ON, the auto-return detector lamp PL201 lights up. (Current flow 6 in Fig. 2-6.)
2. When the tonearm reaches the return position, a shutter is opened, and light from PL201 falls upon PC (CdS). The resistance of PC consequently decreases, resulting in the Q220 collector potential being dropped, and the Q219 base potential being dropped through C218. Consequently, Q219 is turned OFF, and Q206 turned ON. (See current 7 and 8 in Fig. 2-6.)
3. The base of Q207 is thus grounded, resulting in Q207 turning OFF, and Q208 turning ON, and a current flowing through the solenoid. (Current 9 in Fig. 2-6.)
4. The auto-return mechanism is thus activated, and the tonearm returns to the arm rest. The shutter then closes again.
5. With the activation of the auto-return mechanism, the S4 switch is turned ON mechanically, resulting in the connection between R242 and R243 being grounded, and C215 being thus discharged.
6. Q211 is turned ON via C215, R243 and D211, resulting in the flow of currents marked 3 and 5 in Fig. 2-6.
7. Consequently, flip-flops Q209, Q210 and Q212, Q213 are inverted (Q209 and Q213 are turned OFF, and Q210 and Q212 turned ON), or in other words, reset. Q213 is then turned OFF, resulting in Q214 being turned ON (current flow 10 in Fig. 2-6), and the base of Q108 being grounded. Therefore, Q108, Q109 and Q110 are all turned OFF, and the motor stops rotating. Further, since Q209 is turned OFF, the START indicator lamp (LED) D201 goes OFF.
8. In other words, the motor stops as soon as the tonearm automatically returns to the arm rest. All activity ceases, putting the system back into the same status as when the power switch was first turned ON.

4. **Operation when the START/STOP button (S6) is touched during the playing of a record.** (see Fig. 2-7)

1. If S6 is touched during the playing of a record, a positive trigger signal will be generated on the collector of Q203, just as in the case when the auto-start mechanism is activated. A current flows through the solenoid, the auto-return mechanism is activated, and the tonearm is returned to the arm rest. (See current flow ④ and ⑤ in Fig. 2-7.)
2. A negative trigger signal is also generated on the collector of Q204, and is applied to the start-stop flip-flop Q209, Q210 which is consequently inverted. That is, Q209 is turned OFF, and Q210 turned ON.
3. Q211 is turned ON, just as was described in step 5, 6 for auto-return operation. The motor flip-flop Q212, Q213 is also inverted – Q212 being turned ON, and Q213 turned OFF. These 2 flip-flops are thus reset.
4. When Q213 is turned OFF, the motor stops, and the START indicator lamp (LED) D201 goes OFF, just as was described in step 7 for auto-return operation. That is, the circuitry is put back into the same status as when the power switch was turned ON.

5. **Repeat operation** (see Fig. 2-7)

When the REPEAT button is touched during the playing of a record, the REPEAT indicator lamp (LED) D203 lights up, and the record being played will be played repeatedly until further action is taken.

1. When switch S7 is touched, a negative trigger signal is generated on the collector of Q216, and is applied to the repeat flip-flop Q217, Q218 which is consequently inverted. That is, Q217 is turned ON, and Q218 turned OFF. And once Q217 is turned ON, the REPEAT indicator lamp (LED) D203 lights up. (See current flow ⑥ in Fig. 2-7.)
2. Once the tonearm reaches the return position, and the auto-return mechanism activated, thus mechanically turning S4 ON, D219 will become biased in the forward direction since Q217 is ON. Consequently, unlike the auto-return case, Q211 will not turn ON.
3. As a result, the start-stop and motor flip-flops do not invert. Q209 and Q213 remain ON, and Q210 and Q212 remain OFF. Q214 will therefore turn OFF, and Q108, Q109 and Q110 all remain ON, which means the motor will continue to rotate.
4. Also when S4 is turned ON, C214 is discharged, and Q205 is turned ON via D206.
5. Q207 is then turned OFF, and Q208 turned ON, thus passing a current through the solenoid. This reactivates the lead-in mechanism and the tonearm lowers itself onto the record again.

2-3. SCHEMATIC DIAGRAM (Fig. 2-6)

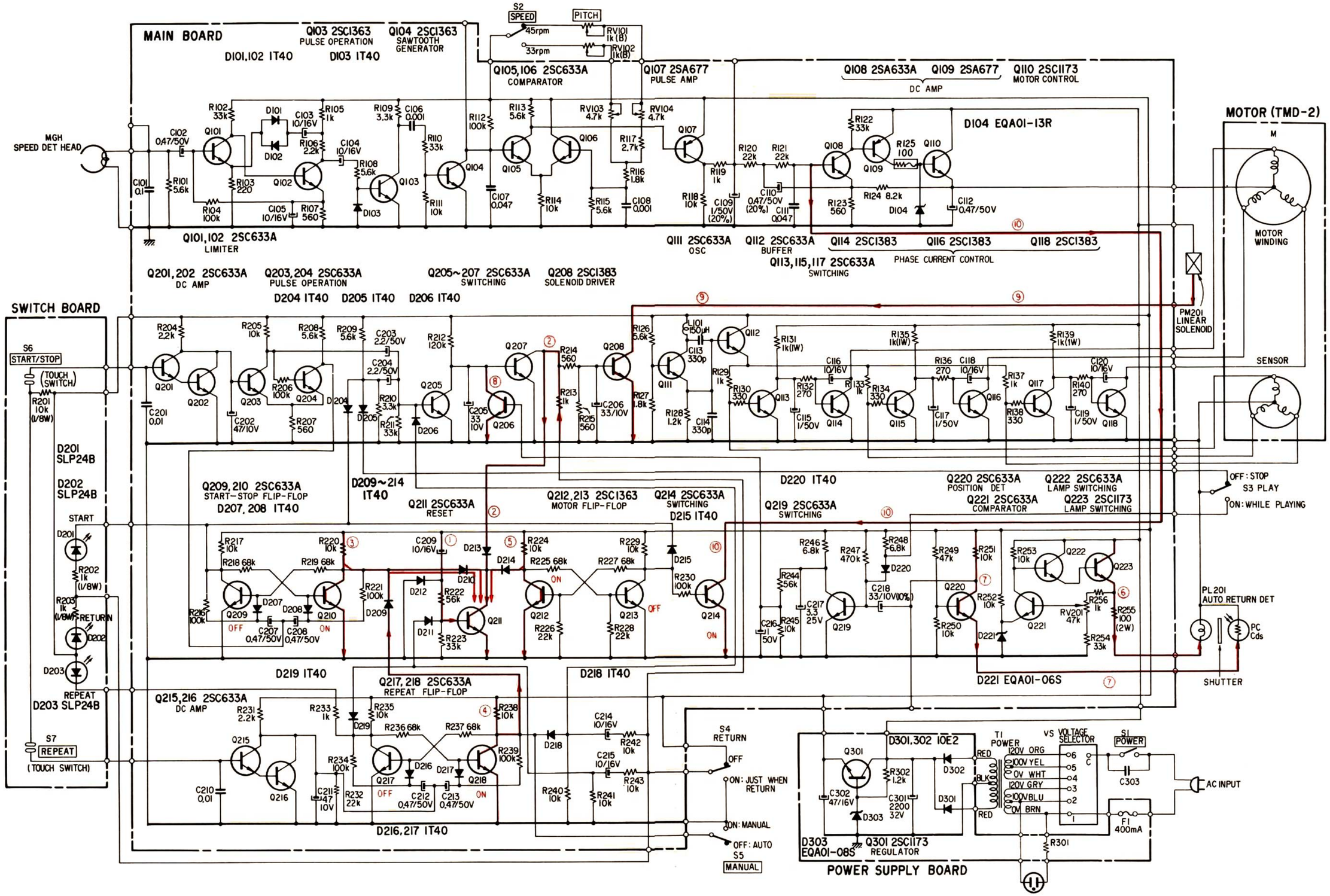

Fig. 2-6.

2-4. SCHEMATIC DIAGRAM (Fig. 2-7)

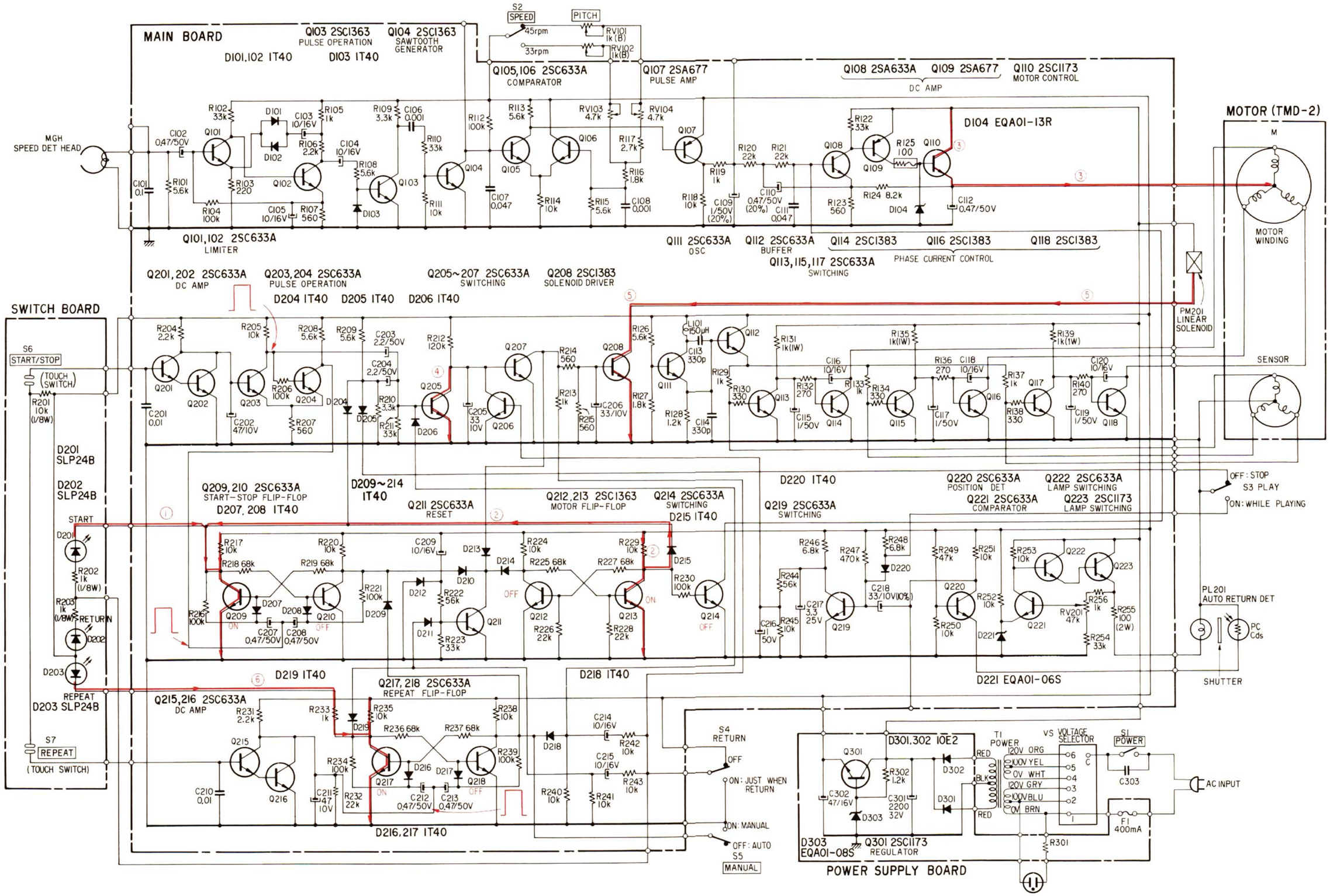

Fig. 2-7.

3. MECHANICAL DESCRIPTION

Automatic Operation Mechanism

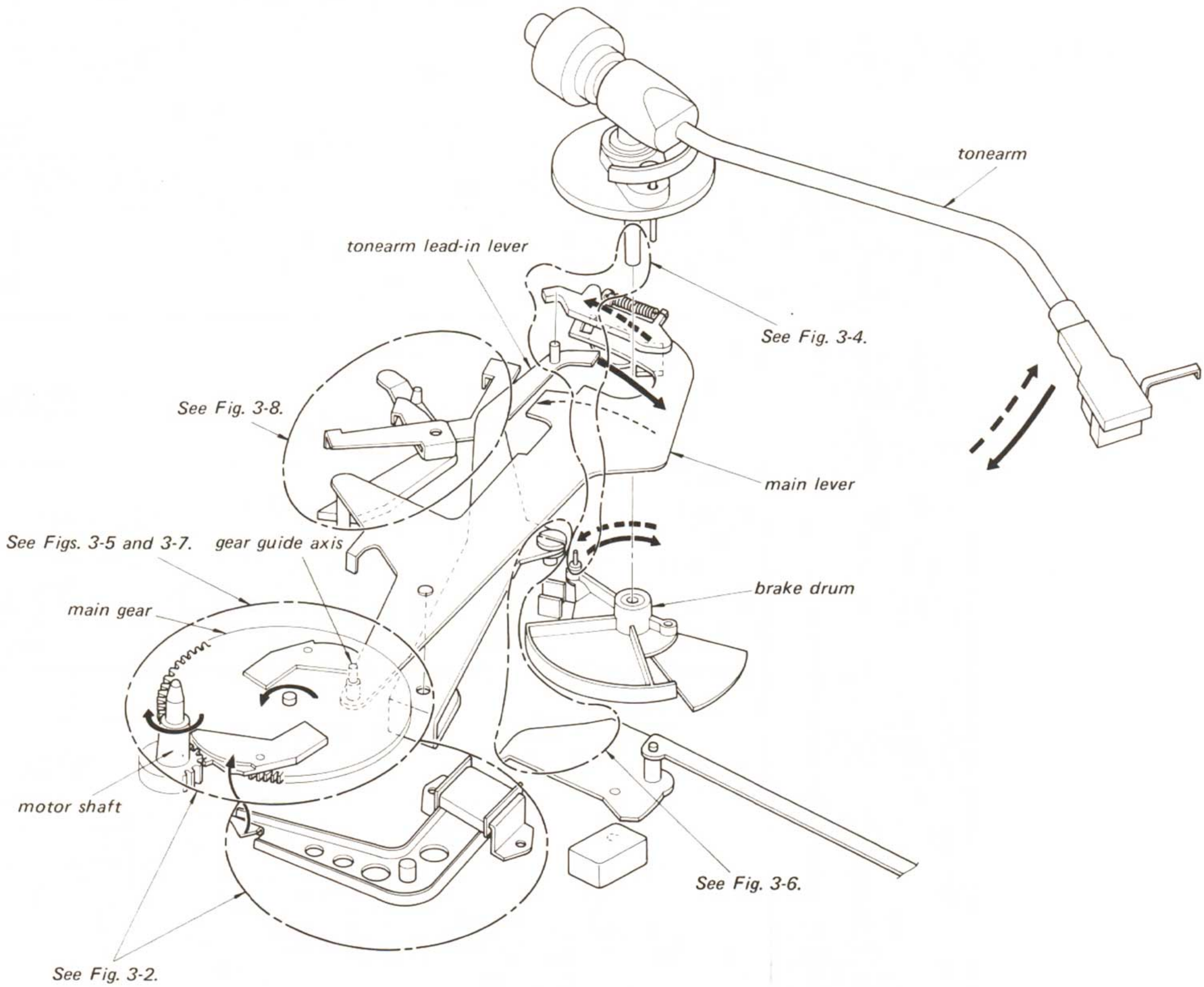

Fig. 3-1.

The PS-4300 is a full-automatic turntable system, which means that the tonearm will move across to the record and commence to play, and then return to the arm rest again after the completion of the record, simply by the operation of control buttons. This cycle of operations is performed by the transfer of a series of changes from the main gear cam to the main lever. This series of changes is described below.

Operations During Start of Play

1. The tonearm's horizontal movement

1. When the metal part of the START/STOP button is touched by the hand, the system control circuit is activated, resulting in the motor commencing to rotate, and current flowing through the solenoid (PM201).
2. With current flowing through the solenoid, the kick lever is pulled in direction ①, resulting in tip Ⓐ of the kick lever pushing against part Ⓑ of the sub-gear (L). This sub-gear is thus pushed out in direction ② to engage the center gear mounted on the motor shaft. (See Fig. 3-2.)

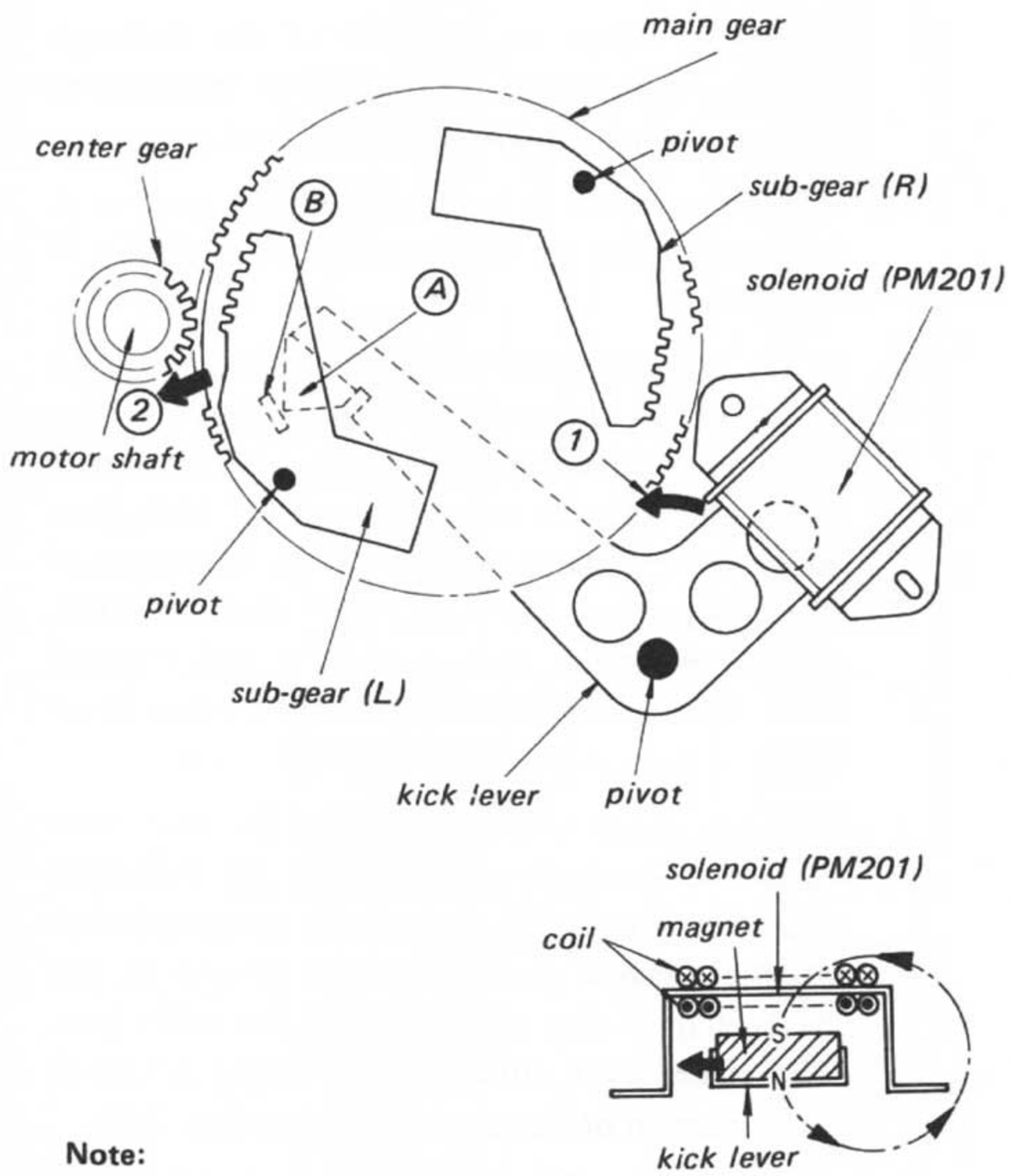

Note:
When current passes through the solenoid, the magnet exerts a force in the direction of the arrow. (Fleming's left hand rule.)

Fig. 3-2.

3. Once the revolving center gear engages the sub-gear (L), the main gear will commence to rotate in the counterclockwise direction due to the driving force supplied by the motor. It will stop again in the position shown in Fig. 3-7.
4. The gear guide axis at the tip of the main lever, is guided by the shaded section of the heart-shaped cam groove located on the main gear, moving across in a curved path ③ to position Ⓐ. Therefore, the main lever moves in the direction of arrow ③'. (See Fig. 3-3.)

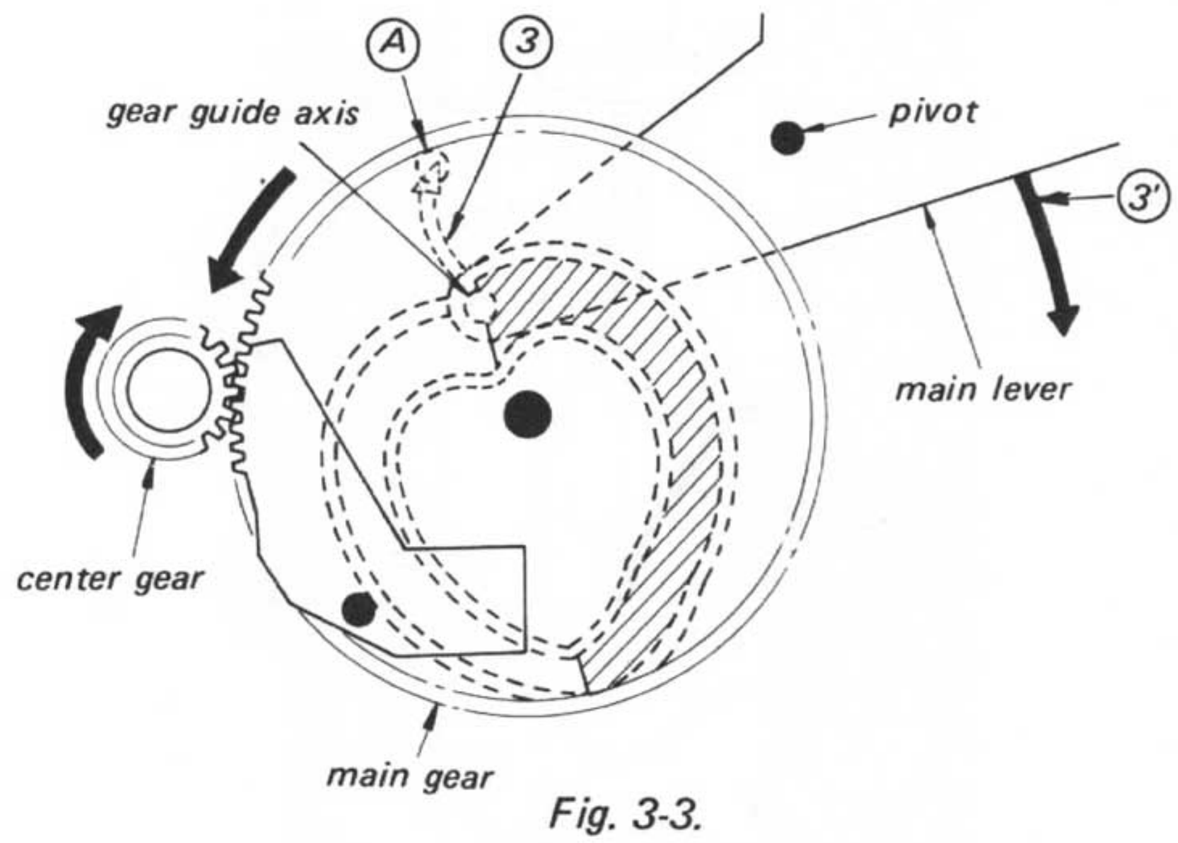

Fig. 3-3.

5. At this time, the lead-in lever moves in the direction of arrow ④, guided by the lead-in cam which moves together with the main lever. The tip Ⓓ of the lead-in lever moves to position Ⓑ, pushing against a pin on the brake drum in the direction of arrow ⑥. And since this brake drum moves in unison with the tonearm, the tonearm will moves across (horizontal movement) in the direction of arrow ⑤. (See Fig. 3-4.)

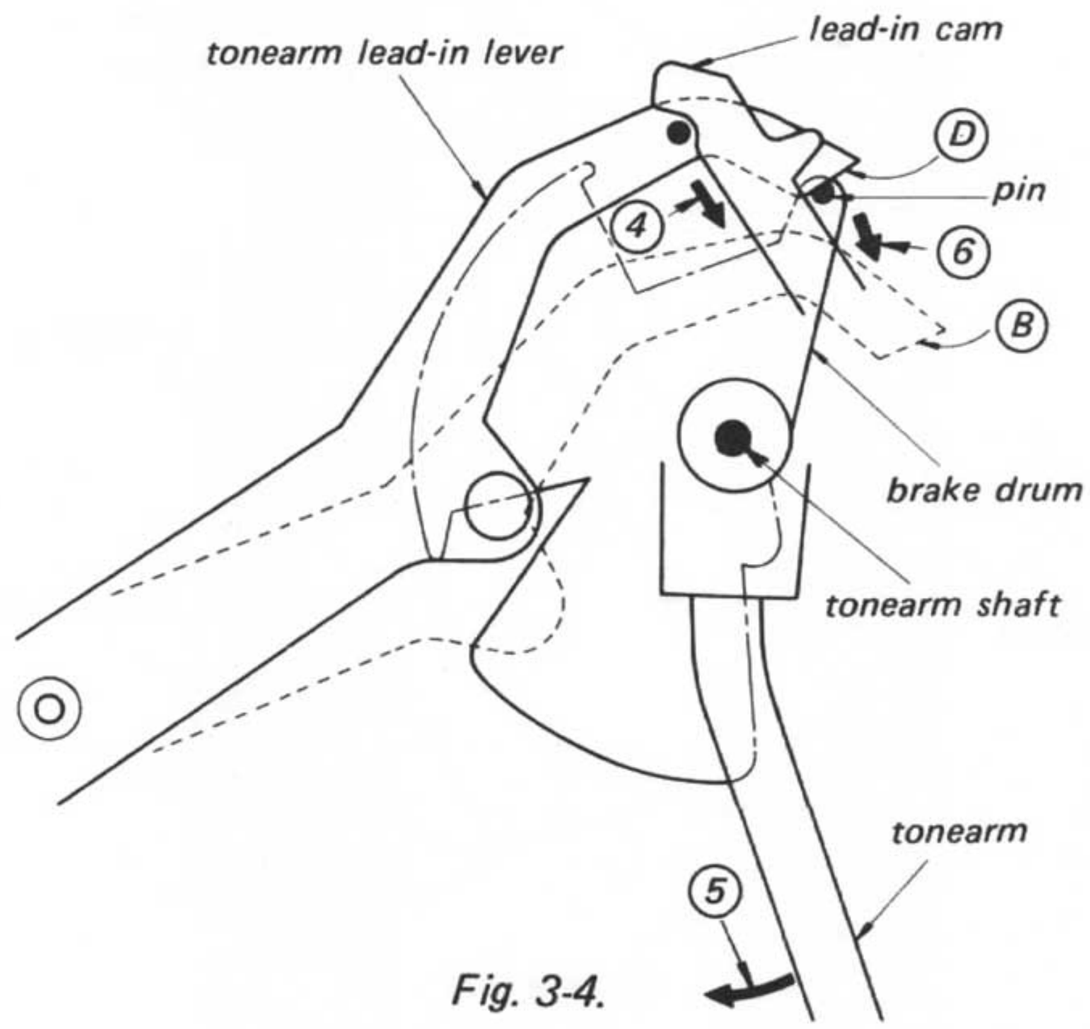

Fig. 3-4.

2. **Lowering of tonearm onto record**

1. The central axis of the push rod resting against the tonearm lifter is on the position Ⓒ in STOP mode. (See Fig. 3-5.)
2. During lead-in, the main lever moves across in the direction of arrow ③′ (See Fig. 3-3), resulting in the position of the central axis of the push rod moving across as shown by arrow ⑦. (Fig. 3-5.)

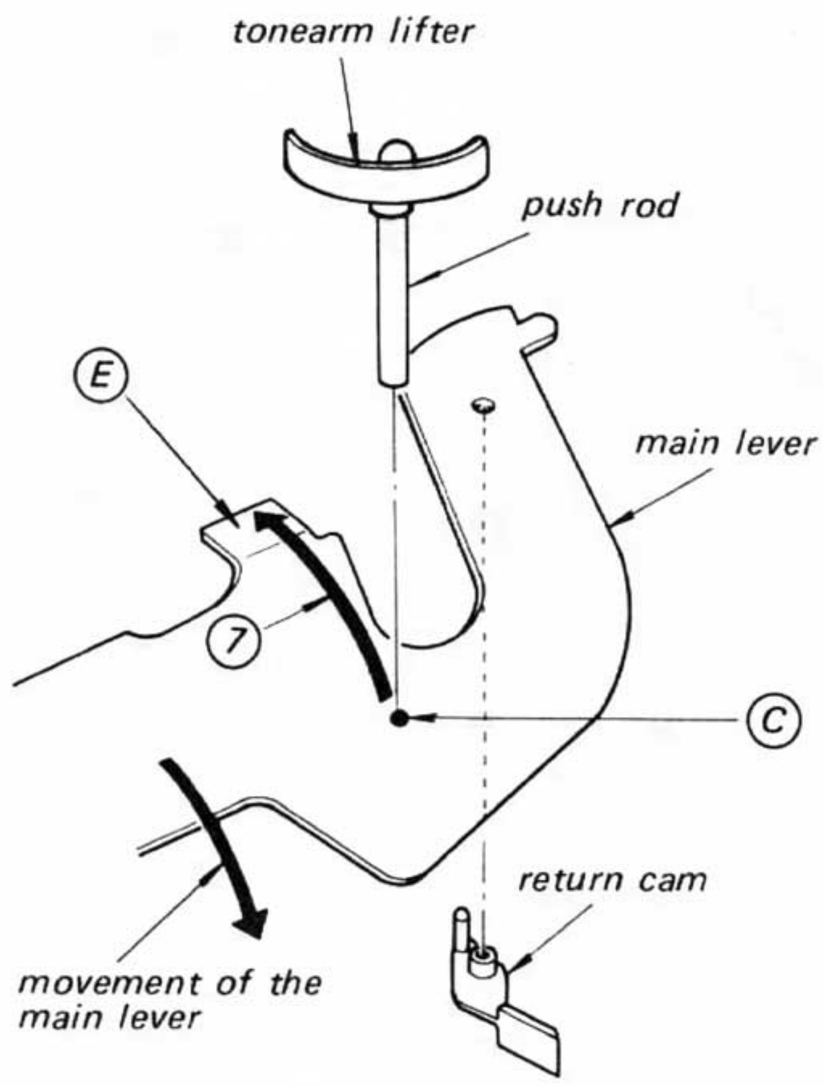

Fig. 3-5.

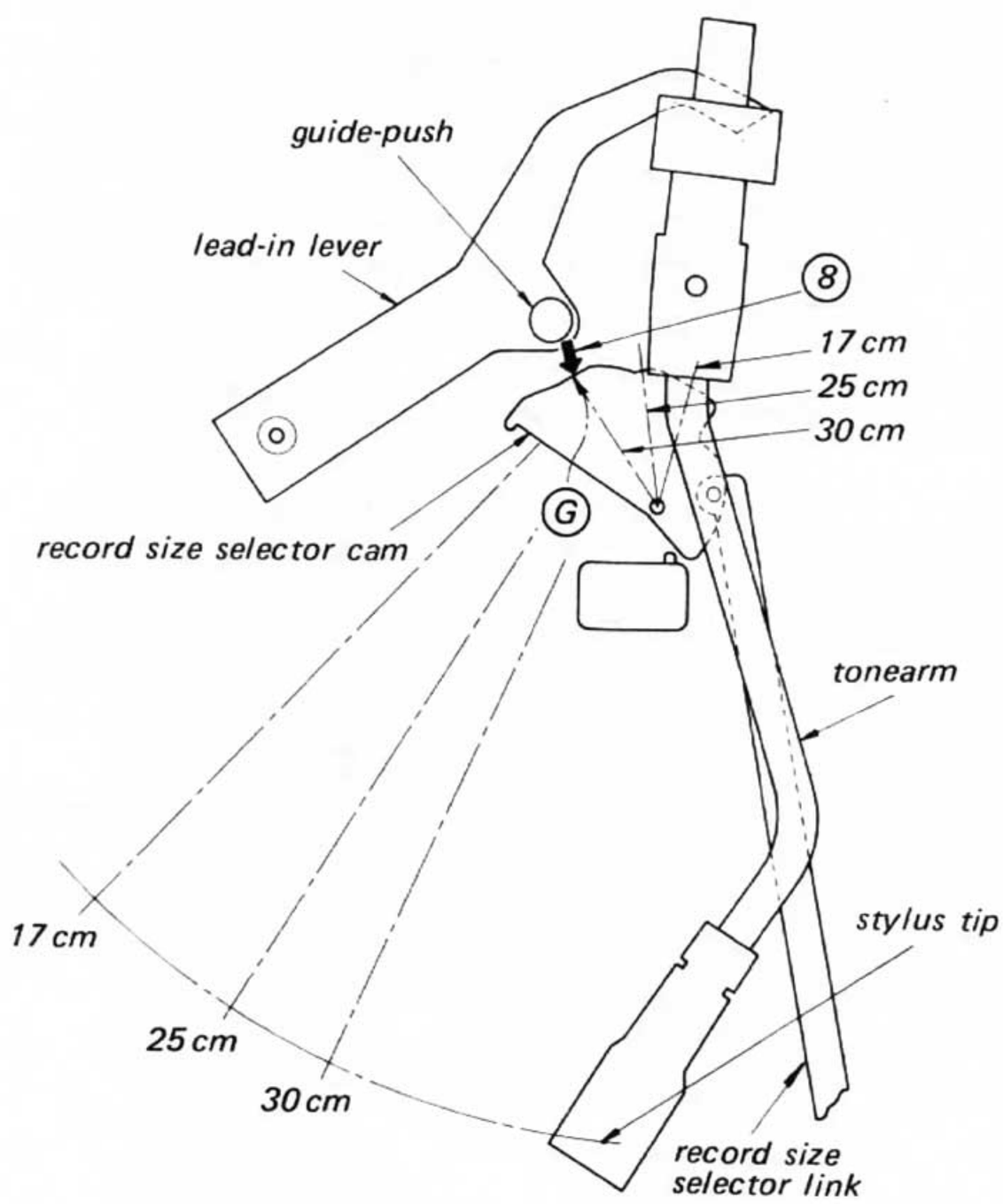

Fig. 3-6.

3. The guide-push stops at the position determined by the surface Ⓖ (Fig. 3-6) of the record size selector cam. The push rod consequently descends to position Ⓔ (Fig. 3-5), resulting in the tonearm lowering onto the surface of the record for the commencement of play.
4. The position where the tonearm lowers (30 cm, 25 cm, 17 cm) is determined by the position of the record size selector cam shown in Fig. 3-6. The guide-push of the lead-in lever moves across in direction of arrow ⑧ during lead-in; and meets the size selector cam at surface Ⓖ (for the 30 cm example shown), thus determining the drop point at the outer edge of a 30 cm record. That is, this position determines the distance moved by the lead-in lever, which consequently determines the rotational angle of the brake drum (and of the tonearm as well).

Operation During Return of Tonearm

Although the return operation can be activated in 2 different ways, the operation itself is the same.

1. Tonearm made to return during playing of a record by touching the START/STOP button.
2. Automatic return as a result of the tonearm activating the record end detector mechanism (luminous sensor record end detector).

1. While the record is being played, the main gear and main lever are in the positions as shown in Fig. 3-7.
2. If the START/STOP button is touched during play, or if the record finishes playing, the systems control circuit is activated. A current flows through the solenoid, and the kick lever moves in the same way as at the biginning of record play (see Fig. 3-2). This time, however, the sub-gear (R) is pushed back and engaged with the center gear, thus rotating the main gear again in the counterclockwise direction.
3. The gear guide axis at the tip of the main lever is moved across to position Ⓕ by following the curved path ⑨ due to the guiding action of the shaded portion of the groove in the heart-shaped cam positioned on the main gear. The main lever consequently moves across in the direction of the arrow ⑨ (see Fig. 3-7).
4. At this time, the push rod is forced back up onto the main lever, resulting in the tonearm lifting up from the record surface.

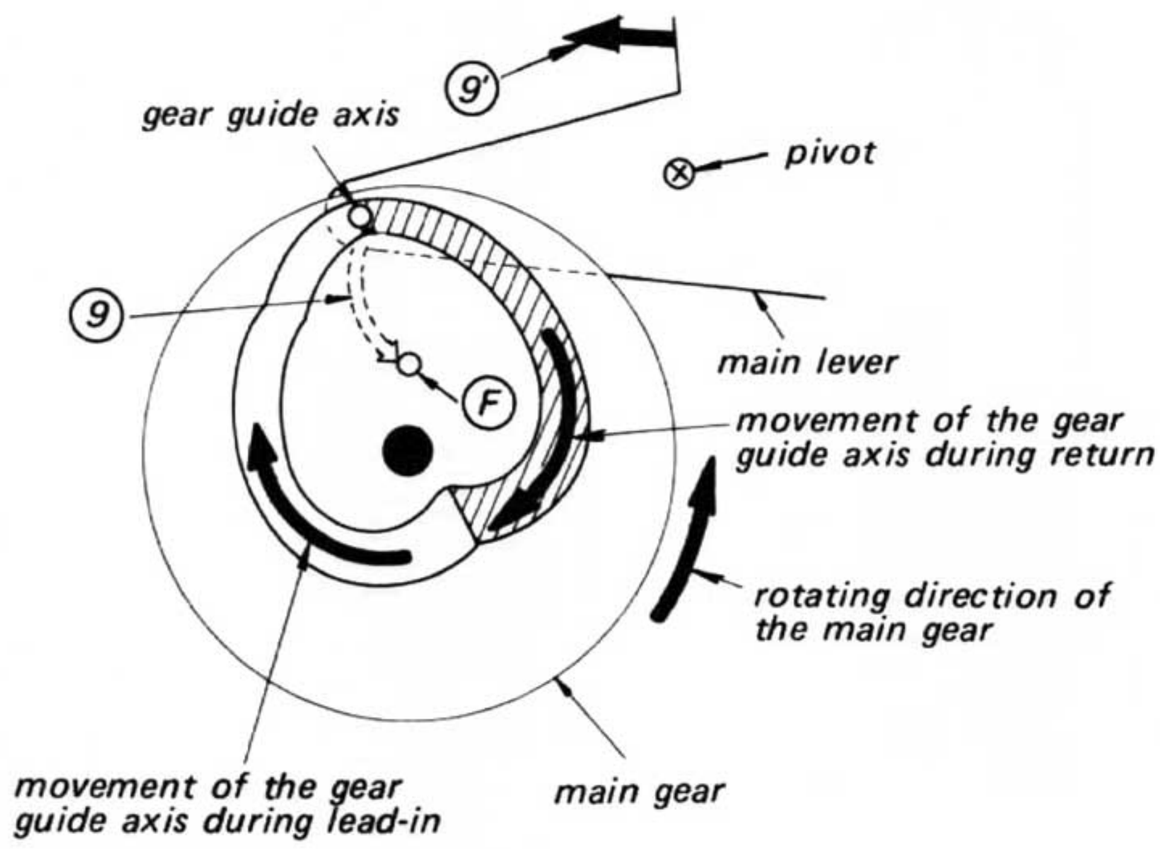

Fig. 3-7.

5. The return cam attached to the main lever (see Fig. 3-5) pushes against the pin of the brake drum, forcing the tonearm to move back (horizontally) towards the arm rest.
6. The return operation is completed when the tonearm arrives back at the arm rest. The main gear comes to a stop in the position shown in Fig. 3-3.

Brake Mechanism (Operation of brake lever)

A fixed amount of braking is applied to the brake drum in order to assure smooth travel of the tonearm during both lead-in and return.

Furthermore, a spring is also employed to exert pressure upon the main lever in the direction of arrow 10 (see Fig. 3-8), thus keeping the main gear in the stop position. (See Fig. 3-3.)

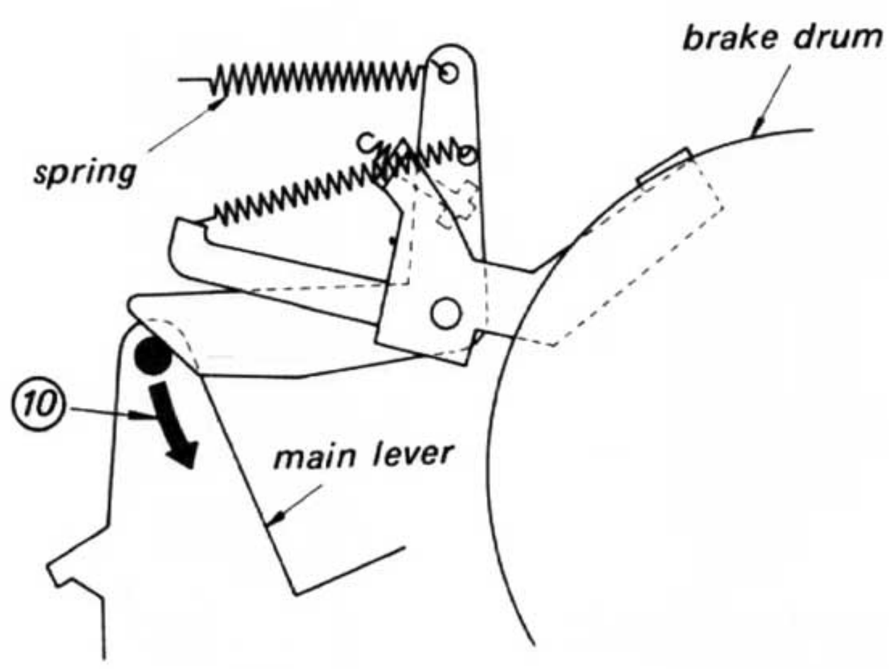

Fig. 3-8.

Record End Detector Mechanism (Luminous Sensor Record End Detector Mechanism)
(see Figs. 3-9 and 3-10)

This record end detector mechanism consists of a lamp, a photo-conductor (CdS), and a shutter connected to the shaft of the tonearm. Changes in position of the shutter (due to the gradual inward movement of the tonearm) results in changes in the amount of light received by the photosensitive element. When the stylus runs in the lead-out groove of the record, the tonearm suddenly moves across by a relatively larger amount, resulting in a sudden increase in the amount of light striking the photosensitive element, exceeding a preset value. An electronic circuit is consequently activated, resulting in current flowing through the solenoid.

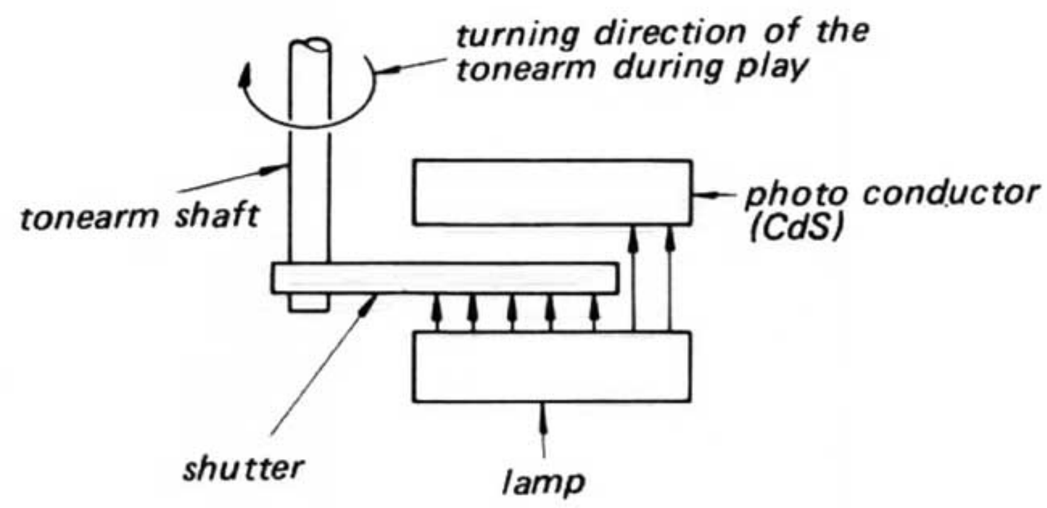

Fig. 3-9.

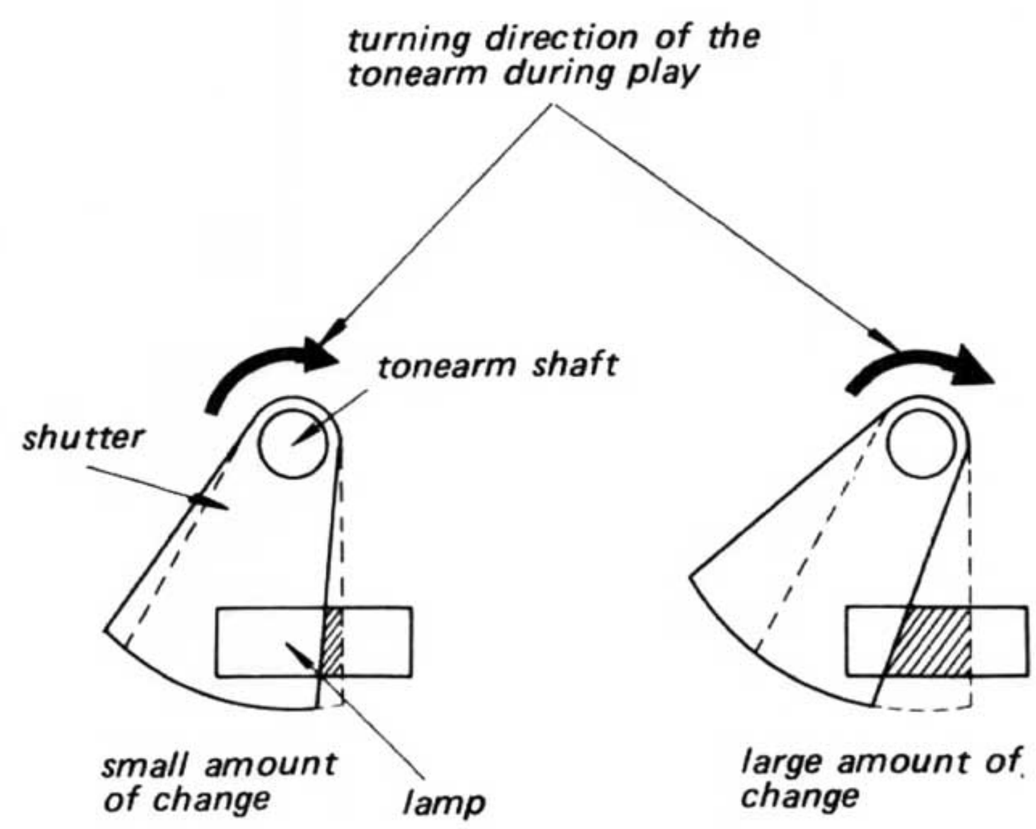

Fig. 3-10.

Sony Corporation
1977
9-958-353-81
7F06104-1
Printed in Japa